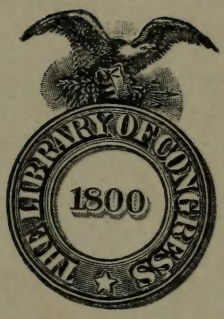
THE LIBRARY OF CONGRESS
1800

A TEXTBOOK

ON

MECHANICAL DRAWING

INTERNATIONAL CORRESPONDENCE SCHOOLS
SCRANTON, PA.

ELEMENTARY MECHANICS
STRENGTH OF MATERIALS
APPLIED MECHANICS
MACHINE DESIGN

SCRANTON
INTERNATIONAL TEXTBOOK COMPANY
A-4

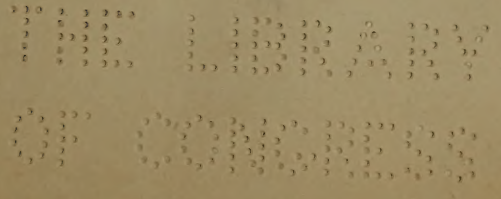

LIBRARY of CONGRESS
Two Copies Received
JUN 20 1904
Copyright Entry
June 20-1904
CLASS a XXc. No.
89916
COPY B

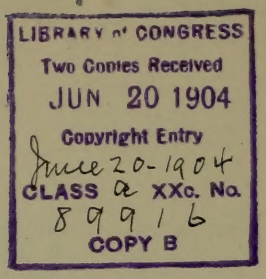

TG 159
I62
TJ230
.I6

Copyright, 1897, 1898, 1899, by THE COLLIERY ENGINEER COMPANY.
Copyright, 1904, by INTERNATIONAL TEXTBOOK COMPANY.

Elementary Mechanics: Copyright, 1892, 1893 1894, 1896, 1898, by THE COLLIERY ENGINEER COMPANY.

Strength of Materials: Copyright, 1894, 1899, by THE COLLIERY ENGINEE[illegible] PANY.

Applied Mechanics: Copyright, 1895, 1900, by THE COLLIERY ENGINEER COMPANY.

Machine Design: Copyright, 1896, 1900, by THE COLLIERY ENGINEER COMPANY.

Elementary Mechanics, Key: Copyright, 1893, 1894, 1895, 1897, by THE COLLIERY ENGINEER COMPANY.

Strength of Materials, Key: Copyright, 1894, by THE COLLIERY ENGINEER COMPANY.

Applied Mechanics, Key: Copyright, 1895, by THE COLLIERY ENGINEER COMPANY.

Machine Design, Key: Copyright, 1896, 1897, by THE COLLIERY ENGINEER COMPANY.

All rights reserved.

aIII

BURR PRINTING HOUSE,
FRANKFORT AND JACOB STREETS,
NEW YORK.

THE LIBRARY
OF CONGRESS

CONTENTS

ELEMENTARY MECHANICS — *Page*

Matter and its Properties 297
Motion and Rest 301
Force 303
Dynamics 317
Falling Bodies 320
Statics 329
Simple Machines 335
Work and Energy 352
Density and Specific Gravity 358

STRENGTH OF MATERIALS

Materials Used for Construction 741
Stresses and Strains 748
Factors of Safety 756
Elementary Graphical Statics 763
Beams 771
Columns 798
Torsion and Shafts 804
Ropes 807
Chains 809

APPLIED MECHANICS

Link Mechanisms 812
Cams 839
Power Transmission by Belt 852
Wheels in Trains 872
Gear-Wheels 898
Ratchet Wheels 923

MACHINE DESIGN

	Page
Introductory	1215
Materials Used in Machine Construction	1219
Fastenings	1224
Rotating Pieces	1261
Bearings	1293
Tooth Gearing	1314
Friction Gearing	1330
Belt Gearing	1332
Rope Belting	1343
Chains	1359
Pipe Flanges	1365

ELEMENTARY MECHANICS.

MATTER AND ITS PROPERTIES

DEFINITIONS.

828. **Matter** is anything that occupies space. It is the substance of which all bodies are composed. Matter is composed of *molecules* and *atoms*.

829. A **molecule** is the smallest portion of matter that can exist without changing its nature.

830. An **atom** is an indivisible portion of matter.

Atoms unite to form molecules, and a collection of molecules form a mass or body.

A drop of water may be divided and subdivided, until each particle is so small that it can only be seen by the most powerful microscope, but each particle will still be water. Now, imagine the division to be carried on still farther until a limit is reached beyond which it is impossible to go without changing the nature of the particle. The particle of water is now so small that, if it be divided again, it will cease to be water, and will be something else; we call this particle a *molecule*.

If a molecule of water be divided, it will yield two atoms of hydrogen gas, and one of oxygen gas. If a molecule of sulphuric acid be divided, it will yield two atoms of hydrogen, one of sulphur, and four of oxygen.

It has been calculated that the diameter of a molecule is larger than $\frac{1}{12500000000}$ of an inch, and smaller than $\frac{1}{5000000000}$ of an inch.

831. **Bodies** are composed of collections of molecules. Matter exists in three conditions or forms: *solid*, *liquid*, and *gaseous*.

For notice of the copyright, see page immediately following the title page.

832. A **solid body** is one whose molecules change their relative positions with great difficulty; as iron, wood, stone, etc.

833. A **liquid body** is one whose molecules tend to change their relative positions easily. Liquids readily adapt themselves to the vessel which contains them, and their upper surface always tends to become perfectly level. Water, mercury, molasses, etc., are liquids.

834. A **gaseous body,** or gas, is one whose molecules tend to separate from one another; as air, oxygen, hydrogen, etc.

Gaseous bodies are sometimes called **aeriform** (air-like) **bodies.** They are divided into two classes—the so-called "*permanent*" *gases*, and *vapors.*

835. A **permanent gas** is one which remains a gas at ordinary temperatures and pressures.

836. A **vapor** is a body which at ordinary temperatures is a liquid or solid, but, when heat is applied, becomes a gas, as steam.

One body may be in all three states; as, for example, mercury, which at ordinary temperatures is a liquid, becomes a solid (freezes) at 40° below zero, and a vapor (gas) at 600° above zero. By means of great cold, all gases, even hydrogen, have been liquefied, and some solidified.

By means of heat, all solids have been liquefied and a great many vaporized. It is probable that if we had the means of producing sufficiently great extremes of heat and cold, all solids might be converted into gases, and all gases into solids.

837. Every portion of matter possesses certain qualities called *properties.* Properties of matter are divided into two classes: *general* and *special.*

838. **General properties of matter** are those which are common to all bodies. They are as follows: *Extension, impenetrability, weight, indestructibility, inertia, mobility, divisibility, porosity, compressibility, expansibility,* and *elasticity.*

839. Special properties are those which are not possessed by all bodies. Some of the most important are as follows: *Hardness*, *tenacity*, *brittleness*, *malleability*, and *ductility*.

840. Extension is the property of occupying space. Since all bodies must occupy space, it follows that extension is a general property.

841. By **impenetrability** we mean that no two bodies can occupy exactly the same space at the same time.

842. Weight is the measure of the earth's attraction upon a body. All bodies have weight. In former times it was supposed that gases had no weight, since, if unconfined, they tend to move away from the earth; but, nevertheless, they will finally reach a point beyond which they cannot go, being held in suspension by the earth's attraction. Weight is measured by comparing it with a standard. The standard is a bar of platinum owned and kept by the government; it weighs one pound.

843. Inertia means that a body cannot put itself in motion nor bring itself to rest. To do so, it must be acted upon by some force.

844. Mobility means that a body can be changed in position by some force acting upon it.

845. Divisibility is that property of matter which indicates that a body may be separated into parts.

846. Porosity is that property of matter which indicates that there is space between the molecules of a body. Molecules of bodies are supposed to be spherical, and, hence, there is space between them, as there would be between peaches in a basket. The molecules of water are larger than those of salt; so that when salt is dissolved in water, its molecules wedge themselves between the molecules of the water, and, unless too much salt is added, the water will occupy no more space than it did before. This does not prove that water is penetrable, for the molecules of salt occupy the space that the molecules of water did not.

Water has been forced through iron by pressure, thus proving that iron is porous.

847. Compressibility is that property of matter which indicates that the molecules of a body may be crowded nearer together, so as to occupy a smaller space.

848. Expansibility is that property of matter which indicates that the molecules of a body may be forced apart, so as to occupy a greater space.

849. Elasticity is that property of matter which indicates that if a body be distorted within certain limits, it will resume its original form when the distorting force is removed. Glass, ivory, and steel are very elastic.

850. Indestructibility indicates that matter can never be destroyed. A body may undergo thousands of changes; be resolved into its molecules, and its molecules into atoms, which may unite with other atoms to form other molecules and bodies, which may be entirely different from the original body, but the same number of atoms remains. The whole number of atoms in the universe is exactly the same now as it was millions of years ago, and will always be the same. *Matter is indestructible.*

851. Hardness is that property of matter which indicates that some bodies may scratch other bodies. Fluids and gases do not possess hardness. The diamond is the hardest of all substances.

852. Tenacity is that property of matter which indicates that some bodies resist a force tending to pull them apart. Steel is very tenacious.

853. Brittleness is that property of matter which indicates that some bodies are easily broken; as glass, crockery, etc.

854. Malleability is that property of matter which indicates that some bodies may be hammered or rolled into sheets. Gold is the most malleable of all substances.

855. **Ductility** is that property of matter which indicates that some bodies may be drawn into wire. Platinum is the most ductile of substances.

856. **Mechanics** is that science which treats of the action of forces upon bodies, and the effects which they produce; it treats of the laws which govern the movement and equilibrium of bodies, and shows how they may be utilized.

MOTION AND REST.

VELOCITY.

857. **Motion** is the opposite of rest, and indicates a changing of position in relation to some object. If a large stone is rolled down hill, it is in motion in relation to the hill.

If a person is on a railway train, and walks in the opposite direction from that in which the train is moving, and with the same speed, he will be in motion as regards the train, but at rest with respect to the earth, since, until he gets to the end of the train, he will be directly over the spot at which he was when he started to walk.

858. The **path** of a body in motion is the line described by its *central point*. No matter how irregular the shape of the body may be, nor how many turns and twists it may make; the line which indicates the direction of the center of the body for every instant that it was in motion, is the path of the body.

859. **Velocity** is rate of motion. It is measured by a unit of space passed over in a unit of time. When equal spaces are passed over in equal times, the velocity is said to be **uniform.** In all other cases it is **variable.**

If the fly-wheel of an engine keeps up a constant speed of a certain number of revolutions per minute, the velocity of any point on the wheel is uniform. A railway train having a constant speed of 40 miles per hour, moves 40 miles every hour, or $\frac{40}{60} = \frac{2}{3}$ of a mile every minute; and, since equal spaces are passed over in equal times, the velocity is uniform

Let S = the length of space passed over uniformly;
t = the time occupied in passing over the space S;
V = the velocity.

Then, the velocity V must equal the space S, divided by the time t, or

$$V = \frac{S}{t}. \qquad (7.)$$

Also, the space S must equal the velocity V, multiplied by the time, or

$$S = Vt. \qquad (8.)$$

The time t must equal the space S, divided by the velocity, or

$$t = \frac{S}{V} \qquad (9.)$$

860. Unless stated otherwise, the *space passed over* will be the *length of the path of the body*, and will be measured in *feet* and decimals of a foot, and, unless otherwise stated, the *time* will be measured in *seconds*.

When these *units* are used, the *velocity will be in feet per second*, which means that the center of the body passed over a certain *number of feet every second*, and the *unit* will be *one foot in one second*.

EXAMPLE.—The velocity of sound in still air is 1,092 feet per second. If I see the flash of a cannon when it is fired, but do not hear the report until 5 seconds afterwards, how far away is the cannon?

SOLUTION.—$S = Vt = 1{,}092 \times 5 = 5{,}460$ feet. Ans.

EXAMPLE.—The velocity of light is 186,000 miles a second. If the average distance from the earth to the sun is 93,000,000 miles, how long does it take for a beam of light to reach the earth from the sun?

SOLUTION.—$t = \frac{S}{V} = \frac{93{,}000{,}000}{186{,}000} = 500$ seconds, or 8 minutes 20 seconds. Ans.

EXAMPLE.—If a body passes over a space of 4,800 feet uniformly in 8 minutes, what is its velocity in feet per second?

SOLUTION.—8 minutes = 480 seconds. $V = \frac{S}{t} = \frac{4{,}800}{480} = 10$. Hence, the velocity is 10 feet per second. Ans.

In examples concerning *work* the *unit of velocity* is usually taken as *one foot in one minute*.

The *unit of time* may be a *second*, *minute*, *hour*, *day*, or *year*. The *unit of space* may be *feet*, *miles*, *the earth's radius*, or the *distance from the earth to the sun*, according to the conditions of the example. The larger units are used only in astronomy.

EXAMPLE.—The distance from the earth to the moon is about 60 times the radius of the earth; how many miles is it from here to the moon?

SOLUTION.—The radius of the earth is nearly 4,000 miles; hence, $4{,}000 \times 60 = 240{,}000$ miles, the distance to the moon, nearly. Ans.

EXAMPLES FOR PRACTICE.

1. The piston speed of a steam engine is 10 feet per second; how many miles will the piston travel in one hour? Ans. $6\frac{9}{11}$ mi.

2. If a railroad train travels 70 miles in one hour, what is its velocity in feet per second? Ans. $102\frac{2}{3}$ ft. per sec.

3. A man runs 100 yards in 12 seconds; how long will it take him to run a mile at the same rate? Ans. 3 min. 31.2 sec.

4. The outside diameter of an engine fly-wheel is 13 feet 9 inches. A point on the rim travels 45,000 feet in 5 minutes; what is the velocity in feet per second? Ans. 150 ft. per sec.

FORCE.

THE THREE LAWS OF MOTION.

861. A **force** is that which produces, or tends to produce or destroy, motion. Forces are called by various names, according to the effects which they produce upon a body, as *attraction*, *repulsion*, *cohesion*, *adhesion*, *accelerating* force, *retarding* force, *resisting* force, etc., but all are equivalent to a push or pull, according to the direction in which they act upon a body. That the effect of a force upon a body may be compared with another force, it is necessary that three conditions be fulfilled in regard to both forces; they are as follows:

(1.) *The point of application, or point at which the force acts upon the body, must be known.*

(2.) *The direction of the force, or, what is the same thing, the straight line along which the force tends to move the point of application, must be known.*

(3.) *The magnitude or value of the force, when compared with a given standard, must be known.*

862. The unit of magnitude of forces will *always* be taken as *one pound*, in this section on Elementary Mechanics, and all forces will be spoken of as a certain number of pounds.

863. According to the effects which forces produce upon a body, the science of Mechanics is subdivided as follows:

(1.) *Mechanics of Solid Bodies.*

(2.) *Mechanics of Fluids.*

(3.) *Mechanics of Heat, or Thermodynamics.*

Mechanics of Solids is further divided into *Statics* and *Kinetics*, or *Dynamics*, as it is commonly called.

Mechanics of Fluids is further divided into *Mechanics of Air and Gases*, or *Pneumatics*, and *Mechanics of Liquids.* The Mechanics of Liquids is divided into *Hydrostatics* and *Hydrokinetics;* the latter is also called *Hydraulics* and *Hydrodynamics.*

864. **Statics** treats of the conditions of the equilibrium of bodies. A body is in **equilibrium** under the action of forces, when the forces acting upon the body balance each other.

865. **Kinetics,** or **Dynamics,** treats of bodies in motion, and the effects which they may produce.

866. **Pneumatics** treats of the laws of the pressure and of the movement of air and other gaseous bodies.

867. **Hydrostatics** treats of the equilibrium of liquids.

868. **Hydrokinetics** (also called Hydraulics and Hydrodynamics) treats of liquids in motion, and the effects which they may produce.

869. **Thermodynamics** treats of the mechanical effects of heat upon bodies.

870. The fundamental principles of the relations between force and motion were first stated by Sir Isaac Newton. They are called "Newton's Three Laws of Motion," and are as follows:

(I.) *All bodies continue in a state of rest, or of uniform motion, in a straight line, unless acted upon by some external force that compels a change.*

(II.) *Every motion, or change of motion, is proportional to the acting force, and takes place in the direction of the straight line along which the force acts.*

(III.) *To every action there is always opposed an equal and contrary reaction.*

From the *first law of motion*, it is inferred that a body once set in motion by any force, no matter how small, will move forever in a straight line, and always with the same velocity, unless acted upon by some other force which compels a change. It is not possible to actually verify this law, on account of the earth's attraction for all bodies, but, from astronomical observations, we are certain that the law is true. This law is often called *the law of inertia.*

871. The word **inertia** is so abused that a full understanding of its meaning is necessary. Inertia is not a force, although it is often so called. If a force acts upon a body and puts it in motion, the effect of the force is stored in the body; and a second body, in stopping the first, will receive a blow equal in every respect to the original force, assuming that there has been no resistance of any kind to the motion of the first body.

It is dangerous for a person to jump from a fast-moving train, for the reason that, since his body has the same velocity as the train, it has the same force stored in it that would cause a body of the same weight to take the same velocity as the train, and the effect of a sudden stoppage is the same as the effect of a blow necessary to give the person that velocity. But, by "bracing" himself and jumping in the same direction that the train is moving, and running, he brings himself gradually to rest, and thus reduces the danger. If a body is at rest, it must be acted upon by a force in order to be put in motion, and, no matter how great the force may be, the body cannot be *instantly* put in motion.

The resistance thus offered to being put in motion is commonly, but erroneously, called, the *Resistance of Inertia.* It should be called the *Resistance due to Inertia.*

From the *second law*, it is seen that, if two or more forces act upon a body, their final effect upon the body will be in proportion to their magnitude and to the directions in which they act. Thus, if the wind is blowing due west, with a velocity of 50 miles per hour, and a ball is thrown due north with the same velocity, or 50 miles per hour, the wind will carry the ball just as far west as the force of the throw carried it north, and the combined effect will be to cause it to move north-west. The amount of departure from due north will be proportional to the force of the wind, and independent of the velocity due to the force of the throw.

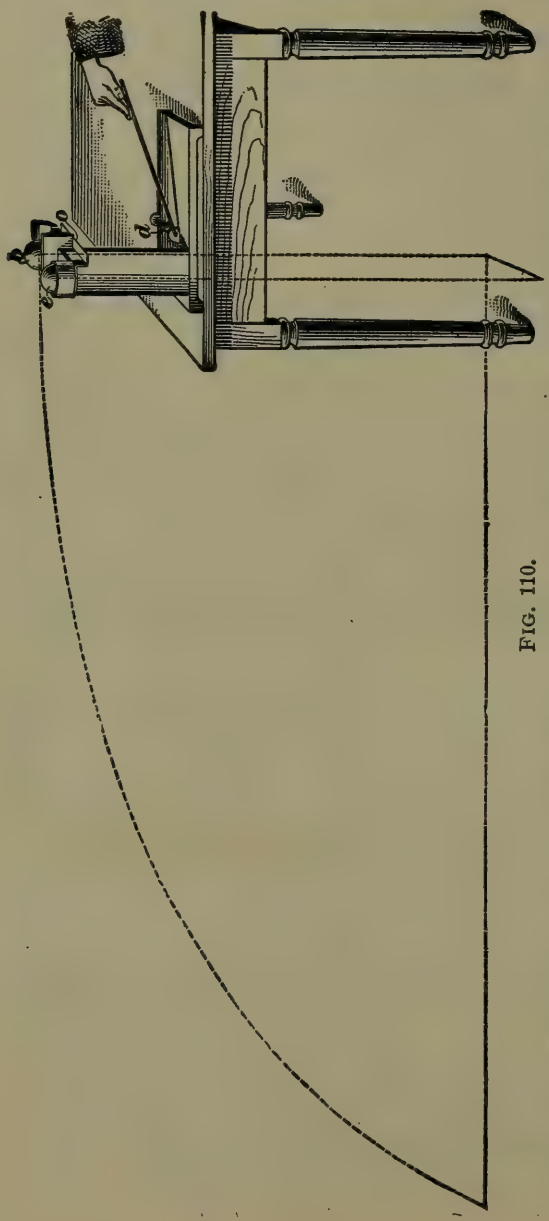

Fig. 110.

In Fig. 110, a ball *e* is supported in a cup, the bottom of which is attached to the lever *o* in such a manner that a movement of *o* will swing the bottom horizontally and allow the ball to drop. Another ball *b* rests in a horizontal groove that is provided with a slit in the bottom. A swinging arm is actuated by

the spring *d* in such a manner that, when drawn back as shown and then released, it will strike the lever *o* and the ball *b* at the same time. This gives *b* an impulse in a horizontal direction and swings *o* so as to allow *e* to fall.

On trying the experiment, it is found that *b* follows a path shown by the curved dotted line, and reaches the floor at the same instant as *e*, which drops vertically. This shows that the force which gave the first ball its horizontal movement, had no effect on the vertical force which compelled both balls to fall to the floor, the vertical force producing the same effect as if the horizontal force had not acted. The second law may also be stated as follows: *A force has the same effect in producing motion, whether it acts upon a body at rest, or in motion, and whether it acts alone or with other forces.*

The *third law* states that action and reaction are equal and opposite. A man cannot lift himself by his boot-straps, for the reason that he presses downwards with the same force that he pulls upwards; the downward reaction equals the upward action, and is opposite to it.

In springing from a boat we must exercise caution, or the reaction will drive the boat from the shore. When we jump from the ground, we tend to push the earth from us, while the earth reacts and pushes us from it.

872. A **force** may be represented by a line; thus, in Fig. 111, let *A* be the *point of application* of the force; let the length of the line *A B* represent its *magnitude*, and let the arrow-head indicate the *direction* in which the force acts, then the line *A B* fulfils the three conditions (see Art. **861**), and the force is fully represented.

FIG. 111.

THE COMPOSITION OF FORCES.

873. When two forces act upon a body at the same time, but at different angles, their final result may be obtained as follows:

In Fig. 112, let A be the common *point of application* of the two forces, and let $A\ B$ and $A\ C$ represent the *magnitude* and *direction* of the forces. According to the second law of motion, the final effect of the movement due to these two forces would be the same whether they acted singly or together. Suppose that the line $A\ B$ represents the distance that the force $A\ B$ would cause the body to move; similarly, that $A\ C$ represents the distance which the force $A\ C$ would cause the body to move when both forces were acting separately. The force $A\ B$, acting alone, would carry the body to B; if the force $A\ C$ were now to act upon the body, it would carry it along the line $B\ D$, parallel to $A\ C$, to a point D, at a distance from B equal to $A\ C$. Join C and D, then $C\ D$ is parallel to $A\ B$, and $A\ B\ D\ C$ is a parallelogram. Draw the diagonal $A\ D$. According to the second law of motion, the body will stop at D, whether the forces act separately or together, but if they act together, the path of the body will be along $A\ D$, the diagonal of the parallelogram. Moreover, the length of the line $A\ D$ represents the *magnitude* of a force which, acting at A in the *direction* $A\ D$, would cause the body to move from A to D; in other words, $A\ D$, measured to the same scale as $A\ B$ and $A\ C$, represents, in *magnitude* and *direction*, the combined effect of the two forces $A\ B$ and $A\ C$.

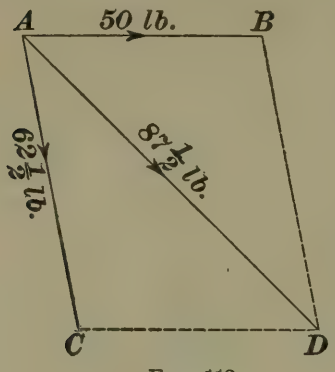

FIG. 112.

874. This line $A\ D$ is called the **resultant.** Suppose that the scale used was 50 pounds to the inch; then, if $A\ B = 50$ pounds, and $A\ C = 62\frac{1}{2}$ pounds, the length of $A\ B$ would be $\frac{50}{50} = 1$ inch, and the length of $A\ C$ would be $\frac{62.5}{50} = 1\frac{1}{4}$ inches. If $A\ D$, or the *resultant*, measures $1\frac{3}{4}$ inches, its *magnitude* would be $1\frac{3}{4} \times 50 = 87\frac{1}{2}$ pounds.

Therefore, a force of $87\frac{1}{2}$ pounds acting upon a body at A in the direction $A\ D$, will produce the same result as the

combined effects of a force of 50 pounds acting in the direction $A\ B$, and a force of $62\frac{1}{2}$ pounds acting in the direction $A\ C$.

875. The above method of finding the resulting action of two forces acting upon a body at a common point, is correct, whatever may be their direction and magnitudes. Hence, to find the **resultant** of two forces when their common point of application, their direction and magnitudes are known:

Rule I.—*Assume a point, and draw two lines parallel to the directions of the lines of action of the two forces. With any convenient scale, measure off from the point of intersection (common point of application), distances corresponding to the magnitudes of the respective forces, and complete the parallelogram. From the common point of application, draw the diagonal of the parallelogram; this diagonal will be the resultant, and its direction will be away from the point of application. Its magnitude should be measured with the same scale that was used to measure the two forces.*

This method is called the **graphical method of the parallelogram of forces.**

876. Experimental Proof.—The principle of the parallelogram of forces is clearly shown in Fig. 113. $A\ B\ D\ C$ is a wooden frame, jointed to allow motion at its four corners. The length $A\ B$ equals $C\ D$; that of $A\ C$ equals $B\ D$, and the corresponding adjacent sides are in the ratio of two to three. Cords pass over the pulleys M and N, carrying weights W and w, of 90 and 60 pounds. The ratio between the weights equals the ratio of the corresponding adjacent sides. A weight V of 120 pounds is hung from the corner A.

When the frame comes to rest, the sides $A\ B$ and $A\ C$ lie in the direction of the cords. These sides $A\ B$ and $A\ C$ are accurate graphic representations of the two forces acting upon the point A. It will be found that the diagonal $A\ D$ is vertical, and twice as long as $A\ C$; hence, since $A\ C$ represents a force of 60 pounds, $A\ D$ will represent a force of 2×60, or 120 pounds.

Thus, we see that the line $A\ D$ represents the *resultant* of the two forces $A\ B$ and $A\ C$; in other words, it represents

the resultant of the two weights W and w. This resultant is equal and opposite to the vertical force, which is due to the weight of V.

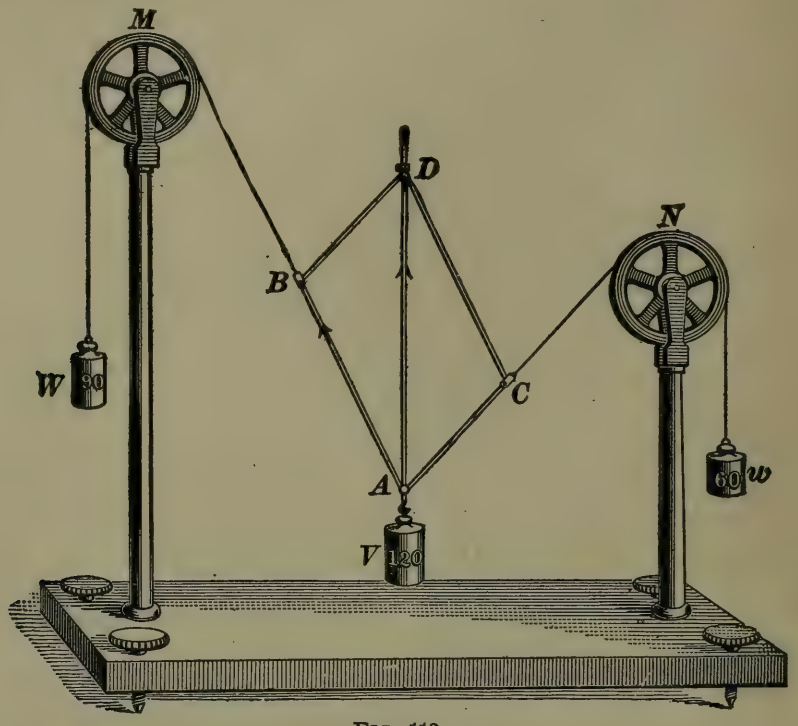

FIG. 113.

Satisfactory results of this kind will be secured when we have the proportion

$$A\,B : A\,C = W : w.$$

EXAMPLE.—If two forces act upon a body at a common point, both acting away from the body, and the angle between them is 80°, what is the value of the resultant, the magnitude of the two forces being 60 pounds and 90 pounds, respectively?

SOLUTION.—Draw two indefinite lines, Fig. 114, making an angle of 80°. With any convenient scale, say 10 pounds to the inch, measure off $A\,B = 60 \div 10 = 6$ inches, and $A\,C = 90 \div 10 = 9$ inches.

Through B, draw $B\,D$ parallel to $A\,C$, and through C, draw $C\,D$ parallel to $A\,B$, intersecting at D. Then draw $A\,D$, and $A\,D$ will be the *resultant;* its *direction* is towards the point D, as shown by the arrow.

Measuring $A\,D$, we find that its length = 11.7 inches. Hence, $11.7 \times 10 = 117$ pounds. Ans.

Caution.—In solving problems by the graphical method, *use as large a scale as possible.* More accurate results are then obtained.

877. The above example might also have been solved

by the method called the **triangle of forces,** which is as follows:

In Fig. 114, suppose that the two forces acted separately, first from A to B, and then from B to D, in the direction of the arrows.

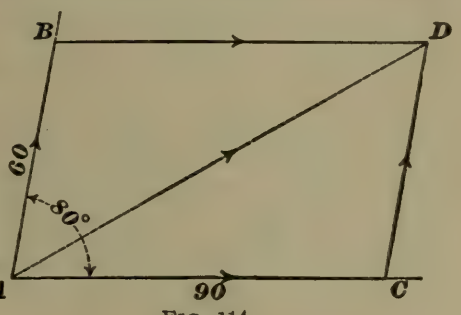

FIG. 114.

Draw $A\ D$; then $A\ D$ is the *resultant* of the forces $A\ B$ and $A\ C$, since $B\ D = A\ C$; but $A\ D$ is a side of the triangle $A\ B\ D$. It will also be noticed that the direction of $A\ D$ is *opposed* to that of $A\ B$ and $B\ D$; hence, to find the **resultant** of two forces acting upon a body at a common point, by the method of triangle of forces:

Rule II.—*Draw the lines of action of the two forces as if each force acted separately, the lengths of the lines being proportional to the magnitude of the forces. Join the extremities of the two lines by a straight line, and it will be the resultant; its direction will be opposite to that of the two forces.*

NOTE.—When we speak of the resultant being opposed in direction to the other forces around the polygon, we mean that, starting from the point where we began to draw the polygon, and tracing each line in succession, the pencil will have the same general direction around the polygon, as if passing around a circle, from left to right, or from right to left, but that the closing line or resultant must have an *opposite direction*, that is, *the two arrow-heads must point towards the point of intersection of the resultant and the last side.*

878. When three or more forces act upon a body at a given point, their *resultant* may be found by the following rule:

Rule III.—*Find the resultant of any two forces; treat this resultant as a single force, and combine it with a third force to find a second resultant. Combine this second resultant with a fourth force, to find a third resultant, etc. After all the forces have been thus combined, the last resultant will be the resultant of all of the forces, both in magnitude and direction.*

EXAMPLE.—Find the resultant of all the forces acting on the point O in Fig. 115, the length of the lines being proportional to the magnitude of the forces.

SOLUTION.—Draw OE parallel and equal to AO, and EF parallel and equal to BO, then OF is the resultant of these two forces, and its direction is from O to F, opposed to OE and EF. Treat OF as if OE and EF did not exist, and draw FG parallel and equal to OC; OG will be the resultant of OF and FG; but OF is the resultant of OE and EF, hence, OG is the resultant of OE, EF, and FG, and likewise of AO, BO, and CO. The line FG, parallel to CO, could not be drawn from the point O to the right of OE, for in that case it would be opposed in direction to OF; but FG must have the same direction as OF, in order that the resultant may be opposed to both OF and FG.

For the same reason, draw GL parallel and equal to DO. Join O and L, and OL will be the *resultant* of all the forces AO, BO, CO, and DO (both in magnitude and direction), acting at the point O. If

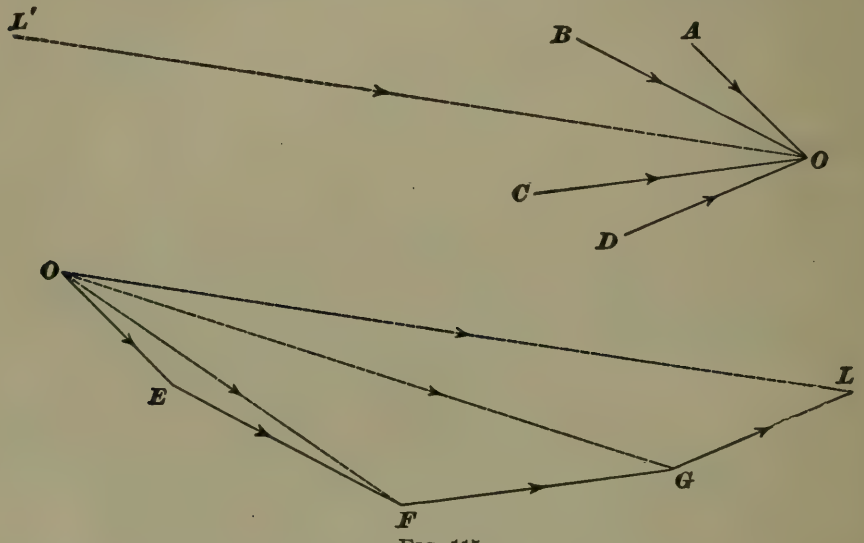

FIG. 115.

$L'O$ were drawn parallel and equal to OL, and having the same direction, it would represent the effect produced on the body by the combined action of the forces AO, BO, CO, and DO.

879. In the last figure, it will be noticed that OE, EF, FG, GL, and LO are sides of a polygon $OEFGL$, in which OL, the resultant, is the closing side, and that its direction is opposed to that of all the other sides. This fact is made use of in what is called the **method of the polygon of forces.**

To find the resultant of several forces acting upon a body at the same point :

Rule IV.—*Through a convenient point on the drawing, draw a line parallel to one of the forces, and having the same*

direction and magnitude. At the end of this line, draw another line parallel to a second force, and having the same direction and magnitude as this second force; at the end of the second line, draw a line parallel and equal in magnitude and direction to a third force. Thus continue until lines have been drawn parallel and equal in magnitude and direction to all of the forces.

The straight line joining the free ends of the first and last lines will be the closing sides of the polygon; mark it opposite in direction to that of the other forces around the polygon, and it will be the resultant of all the forces.

EXAMPLE.—If five forces act upon a body at angles of 60°, 120°, 180°, 240°, and 270°, towards the same point, and their respective magnitudes are 60, 40, 30, 25, and 20 pounds, find the magnitude and direction of their resultant by the method of polygon of forces.*

SOLUTION.—From a common point O, Fig. 116, draw the lines of

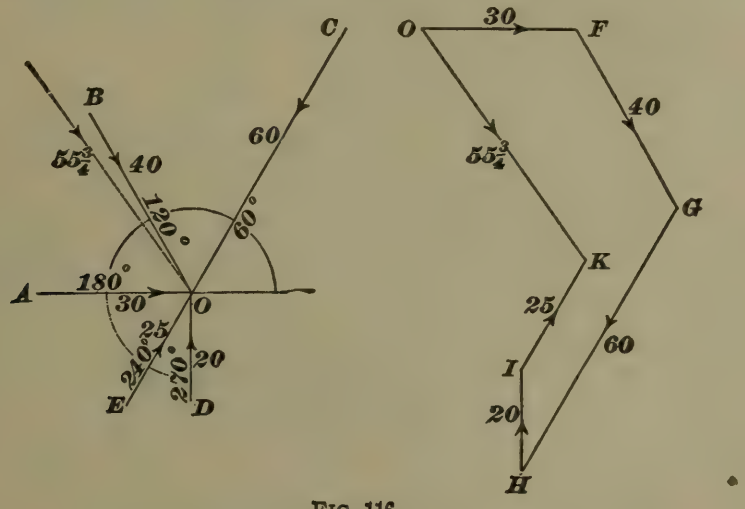

FIG. 116.

action of the forces, making the given angles with a horizontal line through O, and mark them as acting towards O, by means of arrowheads, as shown. Now, choose some convenient scale, such that the whole figure may be drawn in a space of the required size on the drawing. Choose any one of the forces, as $A\,O$, and draw $O\,F$ parallel to it, and equal in length to 30 pounds on the scale. It must also act in the same direction as $O\,A$. At F, draw $F\,G$ parallel to $B\,O$, and equal to 40 pounds. In a similar manner, draw $G\,H$, $H\,I$, and $I\,K$ parallel to

* NOTE.—As stated in Art. 742, all angles are measured from a horizontal line, in a direction opposite to the movement of the hands of a watch (from around the circle to the left), from 1° or less up to 360°.

CO, *DO*, and *EO*, and equal to 60, 20, and 25 pounds, respectively. Join *O* and *K* by *O K*, and *O K* will be the resultant of the combined action of the five forces; its direction is opposite to that of the other forces around the polygon *O F G H I K*, and its magnitude = 55¾ pounds. Ans.

If the resultant *O K*, in Fig. 116, were to act alone upon the body in the direction shown by the arrow-head, with a force of 55¾ pounds, it would produce exactly the same effect upon a body as the combined action of the five forces.

If *O F*, *F G*, *G H*, *H I*, and *I K* represent the distances and directions that the forces would move the body, if acting separately, *O K* is the direction and distance of movement of the body when all the forces act together.

880. From what has been said before, it is seen that any number of forces acting on a body at the same point, or having their lines of action pass through the same point, can be replaced by a *single force* (resultant), whose line of action shall pass through that point.

881. Heretofore, it has been assumed that the forces acted upon a single point on the *surface* of the body, but it will make no difference where they act, so long as the lines of action of all the forces intersect at a *single point*, either within or without the body, only so that the resultant can be drawn through the *point of intersection*. If two forces act upon a body in the same straight line and in the same direction, their *resultant* is the *sum of the two forces;* but, if they act in opposite directions, their *resultant* is the *difference of the two forces*, and its direction is the same as that of the greater force. If they are equal and opposite, the *resultant* is *zero*, or one force just balances the other.

EXAMPLE.—Find the resultant of the forces whose lines of action pass through a single point, as shown in Fig. 117.

SOLUTION.—Take any convenient point *g*, and draw a line *g f*, parallel to one of the forces, say the one marked 40, making it equal in length to 40 pounds on the scale, and indicate its direction by the arrow-head. Take some other force—the one marked 37 will be convenient; the line *f e* represents this force. From the point *e*, draw a line parallel to some other force; say the one marked 29, and make it equal in magnitude and direction to it. So continue with the other forces, taking care that the general direction around the polygon is not

changed. The last force drawn in the figure is $a\,b$, representing the force marked 25. Join the points a and g; then, $a\,g$ is the resultant of all the forces shown in the figure. Its direction is from g to a op-

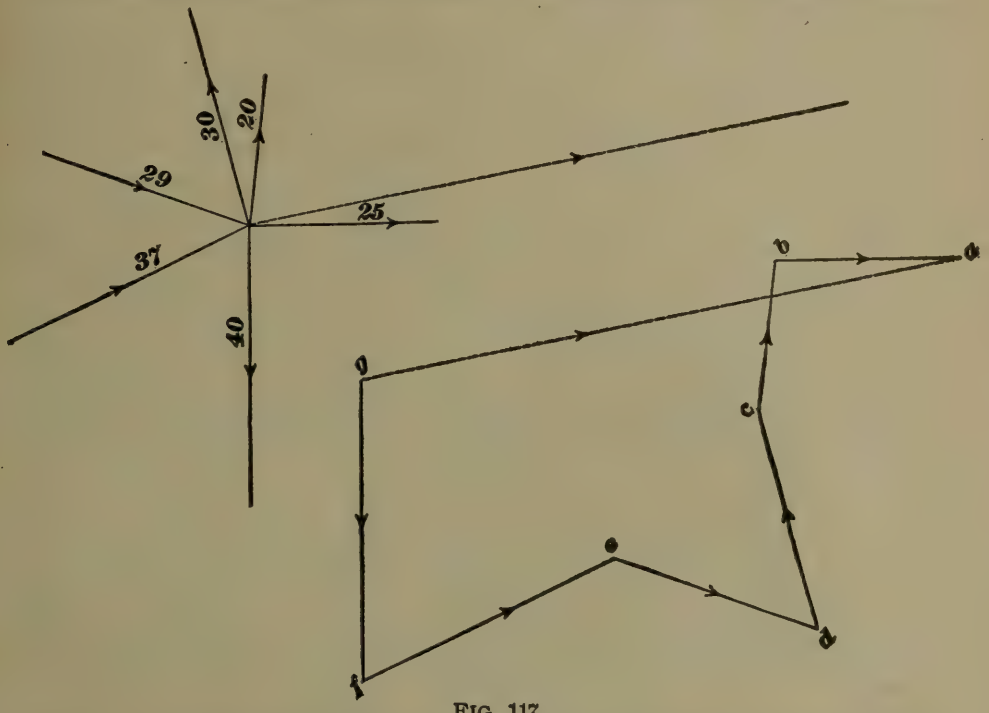

FIG. 117.

posed to the general direction of the others around the polygon. It does not matter in what order the different forces are taken, the resultant will be the same in magnitude and direction, if the work is done correctly.

882. The various methods of finding the resultant of several forces are all grouped under one head : The **composition of forces.**

THE RESOLUTION OF FORCES.

883. Since two forces can be combined to form a single resultant force, we may also treat a single force as if it were the resultant of two forces, whose action upon a body will be the same as that of a single force. Thus, in Fig. 118, the force $O\,A$ may be resolved into two forces, $O\,B$ and $B\,A$, whose directions are opposed to $O\,A$.

If the force $O\,A$ acts upon a body, moving or at rest upon a horizontal plane, and the resolved force $O\,B$ is vertical, and $B\,A$ horizontal, $O\,B$, measured to the same scale as

$O\,A$, is the magnitude of that part of $O\,A$ which pushes the body *downwards*, while $B\,A$ is the magnitude of that part of the force $O\,A$ which is exerted in pushing the body in a *horizontal* direction. $O\,B$ and $B\,A$ are called the **components** of the force $O\,A$, and when these components are vertical and horizontal, as in the present case, they are called the *vertical component* and the *horizontal component* of the force $O\,A$.

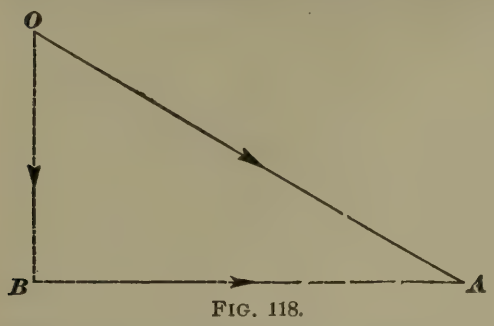

FIG. 118.

884. It frequently happens that the position, magnitude and direction of a certain force is known, and that it is desired to know the effect of the force in some direction, other than that in which it acts. Thus, in Fig. 118, suppose that $O\,A$ represents, to some scale, the magnitude, direction, and line of action of a force acting upon a body at A, and that it is desired to know what effect $O\,A$ produces in the direction $B\,A$. Now $B\,A$, instead of being horizontal, as in the cut, may have any direction. To find the value of the component of $O\,A$ which acts in the direction $B\,A$, we employ the following rule:

Rule V.—*From one extremity of the line representing the given force, draw a line parallel to the direction in which it is desired that the component shall act; from the other extremity of the given force, draw a line perpendicular to the component first drawn, and intersecting it. The length of the component, measured from the point of intersection to the intersection of the component with the given force, will be magnitude of the effect produced by the given force in the required direction.*

Thus, suppose $O\,A$, Fig. 118, represents a force acting upon a body resting upon a horizontal plane, and it is desired to know what *vertical pressure* $O\,A$ produces on the body. Here the desired direction is vertical; hence, from one extremity, as O, draw $O\,B$ parallel to the desired direction (vertical in this case), and from the other extremity,

draw $A\,B$ perpendicular to $O\,B$, and intersecting $O\,B$ at B. Then $O\,B$, when measured to the same scale as $O\,A$, will be the value of the vertical pressure produced by $O\,A$.

EXAMPLE.—If a body weighing 200 pounds rests upon an inclined plane whose angle of inclination to the horizontal is 18°, what force does it exert perpendicular to the plane, and what force does it exert parallel to the plane, tending to slide downwards?

SOLUTION.—Let $A\,B\,C$, Fig. 119, be the plane, the angle A being equal to 18°, and let W be the weight. Draw a vertical line $FD =$ 200 pounds, to represent the magnitude of the weight. Through F, draw FE parallel to $A\,B$, and through D draw $D\,E$ perpendicular to $E\,F$, the two lines intersecting at E. $F\,D$ is now resolved into two components, one, FE, tending to pull the weight downwards, and the other, $E\,D$, acting as a perpendicular pressure on the plane.

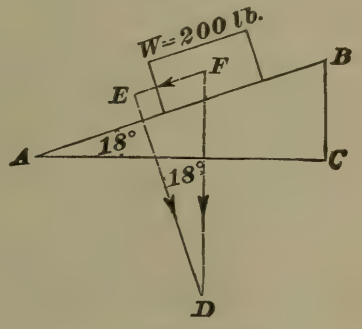

FIG. 119.

Since FD is perpendicular to $A\,C$, and $E\,D$ is perpendicular to $A\,B$, the angle D = angle A = 18°.

Hence, $FE = 200 \times \sin 18° = 200 \times .30902 = 61.804$ pounds, and $E\,D = 200 \times \cos 18° = 200 \times .95106 = 190.212$ pounds.

Force parallel to the plane = 61.804 pounds.
Force perpendicular to the plane = 190.212 pounds. } Ans.

DYNAMICS.

885. Dynamics may be defined as that branch of Mechanics which deals with bodies moving with a variable velocity. In Elementary Mechanics we shall consider only falling bodies and centrifugal force.

GRAVITATION.

886. Every body in the universe exerts a certain attractive force on every other body, which tends to draw the two bodies together. This attractive force is called **gravitation.**

If a body is held in the hand, a downward pull is felt, and if let go of, it will fall to the ground. This pull is commonly called *weight*, but it really is the attraction between the earth and the body.

887. Force of gravity is a term used to denote the attraction between the earth and bodies upon or near its surface. It always acts in a straight line between the center of the body and the center of the earth. The force of gravity varies at points on the earth's surface.

It is slightly less on the top of a high mountain than at the level of the sea. For this reason, the weight of a body also varies. But if the weight of a body at any place be divided by the force of gravity at that place, the result is called the *mass* of the body.

888. The **mass of a body** is the measure of the actual amount of matter that it contains, and is *always the same.*

If the mass of the body be represented by m, its weight by W, and the force of gravity at the place where the body was weighed, by g, we have

$$\text{mass} = \frac{\text{weight of body}}{\text{force of gravity}}, \text{ or } m = \frac{W}{g}. \qquad \textbf{(10.)}$$

889. Law of Gravitation :—

The force of attraction by which one body tends to draw another body towards it, is directly proportional to its mass, and inversely proportional to the square of the distance between their centers.

890. Laws of Weight :—

Bodies weigh most at the surface of the earth. Below the surface, the weight decreases as the distance to the center decreases.

Above the surface the weight decreases as the square of the distance increases.

Illustration.—If the earth's radius is 4,000 miles, a body that weighs 100 pounds at the surface will weigh nothing at the center, since it is attracted in every direction with equal force. At 1,000 miles from the center, it will weigh 25 pounds, since

$$4{,}000 : 1{,}000 = 100 : 25.$$

At 2,000 miles from the center, it will weigh 50 pounds. since

$$4{,}000 : 2{,}000 = 100 : 50.$$

At 3,000 miles from the center, it will weigh 75 pounds, and at the surface, or 4,000 miles from the center, it will weigh 100 pounds. If carried still higher, say 1,000 miles from the surface, or 5,000 miles from the center of the earth, it will weigh 64 pounds, since

$$5{,}000^2 : 4{,}000^2 = 100 : 64.$$

At 4,000 miles from the surface, it will weigh 25 pounds, since

$$8{,}000^2 : 4{,}000^2 = 100 : 25.$$

891. Formulas for Gravity Problems:—

Let W = weight of body at the surface;

w = weight of a body at a given distance above or below the surface;

d = distance between the center of the earth and the center of the body;

R = radius of the earth = 4,000 miles.

Formula for weight when the body is below the surface:

$$w R = d W. \qquad (11.)$$

Formula for weight when the body is above the surface:

$$w d^2 = W R^2. \qquad (12.)$$

EXAMPLE.—How far below the surface of the earth will a 25-pound ball weigh 9 pounds?

SOLUTION.—Use formula **11**, $w R = d W$.

Substituting the values of R, W, and w, we have

$$9 \times 4{,}000 = d \times 25, \text{ or}$$

$$d = \frac{9 \times 4{,}000}{25} = 1{,}440 \text{ miles from the center.} \quad \text{Ans.}$$

EXAMPLE.—If a body weighs 700 pounds at the surface of the earth, at what distance above the earth's surface will it weigh 112 pounds?

SOLUTION.—Use formula **12**, $w d^2 = W R^2$.

Substituting the values of R, W, and w, we have

$$112 \times d^2 = 700 \times 4{,}000^2, \text{ or}$$

$$d = \sqrt{\frac{700 \times 4{,}000^2}{112}} = 10{,}000 \text{ miles.}$$

Therefore, 10,000 − 4,000 = 6,000 miles above the earth's surface. Ans.

EXAMPLE.—The top of Mt. Hercules was said to be 32,000 feet, say 6 miles above the level of the sea. If a body weighs 1,000 pounds at sea-level, what would it weigh if carried to the top of the mountain?

SOLUTION.— $w d^2 = W R^2$, or $w \times 4{,}006^2 = 1{,}000 \times 4{,}000^2$; whence,

$$w = \frac{4{,}000^2 \times 1{,}000}{4{,}006^2} = 997 \text{ pounds.} \quad \text{Ans.}$$

EXAMPLES FOR PRACTICE.

1. How much would 1,000 tons of coal weigh one mile below the surface? Ans. 1,999,500 lb.

2. How much would the coal in example 1 weigh one mile above the surface? Ans. 1,999,000 lb., nearly.

3. How far above the earth's surface would it be necessary to carry a body in order that it may weigh only half as much?

Ans. 1,656.854 miles, nearly.

4. A man weighs 160 pounds at the surface; how much will he weigh 50 miles below the surface? Ans. 158 lb.

5. If a body weighs 100 pounds 400 miles above the earth's surface. how much will it weigh at the surface? Ans. 121 lb.

NOTE.—*Use 4,000 miles as the radius of the earth.*

FALLING BODIES.

892. If a leaden ball and a piece of paper are dropped from the same height, the ball would strike the ground first.

FIG. 120.

This is not because the leaden ball is the heavier, but because the resistance of the air has a greater retarding effect upon the paper than upon the ball. If we place this same leaden ball and a piece of paper in a glass tube, Fig. 120, from which all of the air has been exhausted, it would be found that when the tube was inverted, both would drop to the bottom in exactly the same time. This experiment proves that it was only the resistance of the air that caused the ball to reach the ground first, in the former experiment. This resistance of the air may be nearly equalized by making the two bodies of the same shape and size. For example, if a wooden and an iron ball, having equal diameters, were dropped from the same height, they would strike the ground at almost exactly the same instant, although the iron ball might be ten times as heavy as the wooden ball.

893. Suppose there were several leaden balls, as shown in Fig. 121, at *a*; it is obvious that if they were dropped

together, all would strike the ground at the same time. If the balls were melted together into one ball, as *b*, they would still fall together, and strike the ground in the same time as before.

FIG. 121.

Since a number of horses cannot run a mile in less time than a single horse, so 100 pounds can fall no further in a given time than one pound can.

894. Acceleration is the rate of change of velocity. If a force acts upon a body free to move, then, according to the first law of motion, it will move forever with the same velocity unless acted upon by another force.

Suppose that, at the end of one second, the same force were to act again, the velocity at the end of the second second would be twice as great as at the end of the first second. If the same force were to act again, the velocity at the end of the third second would be three times that at the end of the first second. So, if a constant force acts upon a body free to move, the velocity of the body at the end of any time will be the velocity at the end of one second, multiplied by the number of seconds.

895. This constant force is called a **constant accelerating force,** or **constant retarding force,** according as the velocity is constantly *increased* or *decreased.*

If a body is dropped from a high tower, the velocity with which it approaches the ground will be constantly increased or accelerated; for the attraction of the earth, or force of gravity, is constant, and acts upon the body as a constant accelerating force. It has been found by careful experiments that this force of gravity, or constant accelerating force, on a freely falling body, is equivalent to giving the body a velocity of 32.16 feet in one second; it is always denoted by g. As was mentioned before, g varies at different points of the earth, being 32.0902 at the equator, and 32.2549 at the poles. Its value for this latitude (about 41° 25′ north) is very nearly 32.16, and this value should always be used in solving problems. It has also been found by

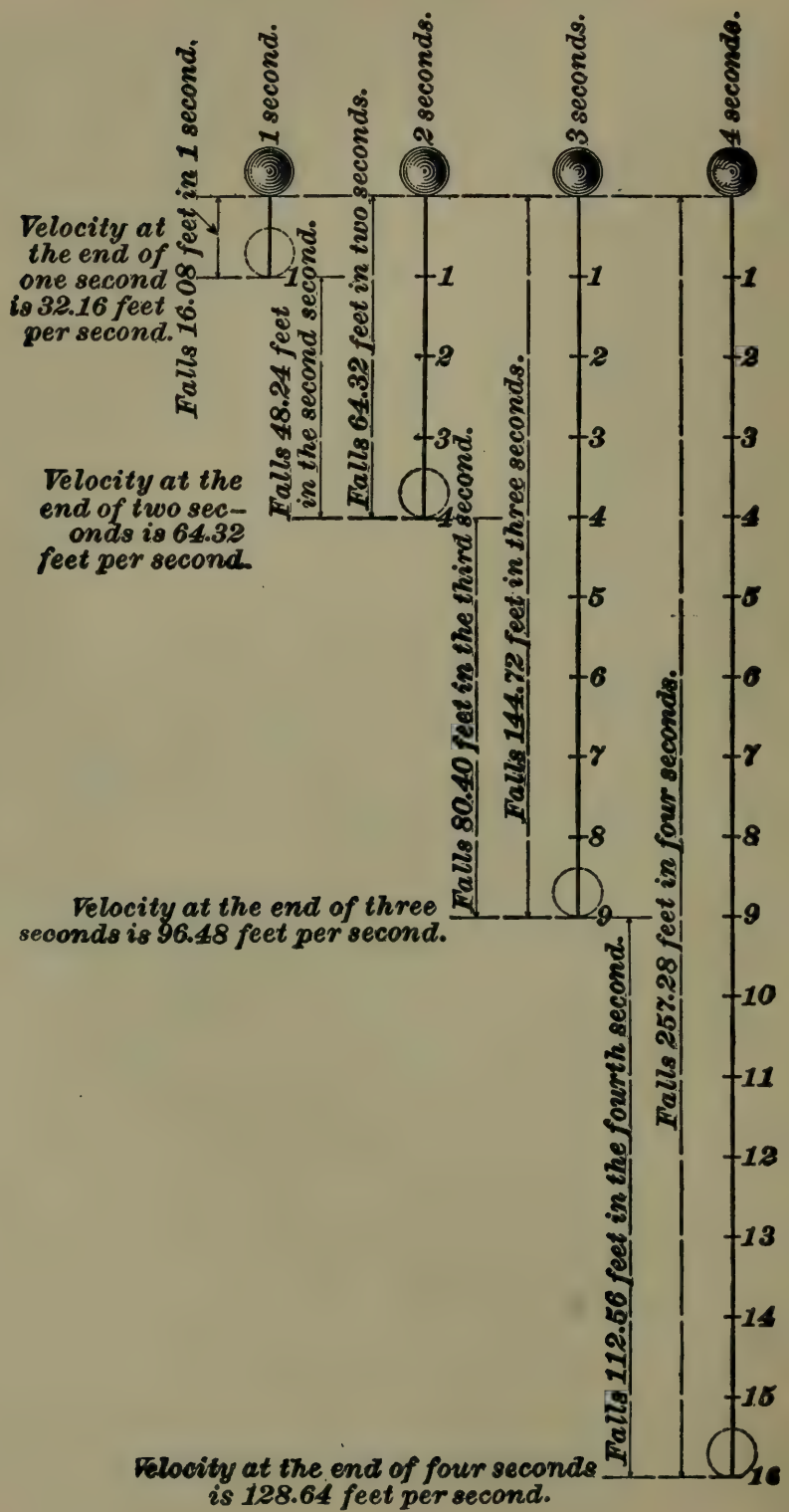
1 second.
2 seconds.
3 seconds.
4 seconds.
Falls 16.08 feet in 1 second.
Velocity at the end of one second is 32.16 feet per second.
Falls 48.24 feet in the second second.
Falls 64.32 feet in two seconds.
Velocity at the end of two seconds is 64.32 feet per second.
Falls 80.40 feet in the third second.
Falls 144.72 feet in three seconds.
Velocity at the end of three seconds is 96.48 feet per second.
Falls 112.56 feet in the fourth second.
Falls 257.28 feet in four seconds.
Velocity at the end of four seconds is 128.64 feet per second.
1
2
3
4
5
6
7
8
9
10
11
12
13
14
15
16

FIG. 122.

experiment that a freely falling body starting from rest will have fallen 16.08 feet at the end of the first second; 64.32 feet at the end of the second second; 144.72 feet at the end of the third second; 257.28 feet at the end of the fourth second, etc., all of which are shown in the diagram, Fig. 122.

Since $\frac{64.32}{16.08} = 4 = 2^2$; $\frac{144.72}{16.08} = 9 = 3^2$; $\frac{257.28}{16.08} = 16 = 4^2$, and 2^2, 3^2, 4^2 are the squares of the number of seconds during which the body falls, it is easy to see that the space through which a body free to move will fall in a given time is equal to 16.08 multiplied by the square of the time in seconds.

Since $16.08 = \frac{32.16}{2} = \frac{1}{2}g$, the space $= \frac{1}{2}g \times$ square of time in seconds.

896. Formulas for Falling Bodies:—

Let g = force of gravity = constant accelerating force due to the attraction of the earth;

t = number of seconds the body falls;

v = velocity at the end of the time t;

h = distance that a body falls during the time t.

$$v = gt. \qquad (13.)$$

That is, the velocity acquired by a freely falling body at the end of t seconds equals 32.16, multiplied by the time in seconds.

EXAMPLE.—What is the velocity of a body after it has fallen four seconds, assuming that the air offered no resistance?

SOLUTION.—Using formula **13**,

$v = gt = 32.16 \times 4 = 128.64$ feet per second. Ans.

$$t = \frac{v}{g} \qquad (14.)$$

That is, the number of seconds during which a body must have fallen to acquire a given velocity equals the given velocity in feet per second, divided by 32.16.

EXAMPLE.—A falling body has a velocity of 192.96 feet per second; how long had it been falling at that instant?

SOLUTION.—Using formula **14**,

$t = \frac{v}{g} = \frac{192.96}{32.16} = 6$ seconds. Ans.

$$h = \frac{v^2}{2g}. \qquad (15.)$$

That is, the height from which a body must fall to acquire a given velocity equals the square of the given velocity, divided by 2 × 32.16.

EXAMPLE.—From what height must a stone be dropped to acquire a velocity of 24,000 feet per minute?

SOLUTION.— 24,000 ÷ 60 = 400 feet per second. Using formula **15**,

$$h = \frac{v^2}{2g} = \frac{400^2}{2 \times 32.16} = \frac{160{,}000}{64.32} = 2{,}487.56 \text{ feet.} \quad \text{Ans.}$$

$$v = \sqrt{2gh}. \qquad (16.)$$

That is, the velocity that a body will acquire in falling through a given height equals the square root of the product of twice 32.16, and the given height.

EXAMPLE.—A body falls from a height of 400 feet; what will be its velocity at the end of its fall?

SOLUTION.—Using formula **16**,

$$v = \sqrt{2gh} = \sqrt{2 \times 32.16 \times 400} = 160.4 \text{ feet per second.} \quad \text{Ans.}$$

$$h = \tfrac{1}{2} gt^2. \qquad (17.)$$

That is, the distance a body will fall in a given time equals 32.16 ÷ 2, multiplied by the square of the number of seconds.

EXAMPLE.—How far will a body fall in 10 seconds?

SOLUTION.—Using formula **17**,

$$h = \tfrac{1}{2} gt^2 = \tfrac{1}{2} \times 32.16 \times 10^2 = 1{,}608 \text{ feet.} \quad \text{Ans.}$$

$$t = \sqrt{\frac{2h}{g}}. \qquad (18.)$$

That is, the time it will take a body to fall through a given height equals the square root of twice the height divided by 32.16.

EXAMPLE.—How long will it take a body to fall 4,116.48 feet?

SOLUTION.—Using formula **18**,

$$t = \sqrt{\frac{2 \times 4{,}116.48}{32.16}} = 16 \text{ seconds.} \quad \text{Ans.}$$

897. A body thrown vertically upwards starts with a certain velocity called the **initial velocity.** In this case gravity acts as a constant retarding force. The formulas given above will also apply in this case.

EXAMPLE.—If a cannon ball is shot vertically upwards with an initial velocity of 2,000 feet per second, (*a*) how high will it go? (*b*) How long a time must elapse before it reaches the earth again?

SOLUTION.—(*a*) Using formula **15**,

$$h = \frac{v^2}{2g} = \frac{2{,}000^2}{2 \times 32.16} = 62{,}189 \text{ feet, nearly, } = 11.778 \text{ miles. Ans.}$$

To find the time it takes to reach a height of 62,189 feet, use formula **14.**

$$t = \frac{v}{g} = \frac{2{,}000}{32.16} = 62.19 \text{ seconds.}$$

Since it will take the same length of time to fall to the ground, the total time will be $62.19 \times 2 = 124.38$ seconds $= 2$ minutes 4.38 seconds. Ans.

PROJECTILES.

898. Any body thrown into the air is a **projectile,** and is acted upon by three forces—the original or initial force, the force of gravity, and the resistance of the air. We shall here consider only those projectiles which are thrown horizontally.

899. The **range** is the horizontal distance between the starting point and the point where the body strikes the ground. In Fig. 123, suppose that *A* represents the starting point of the projectile, and that it is shot horizontally outwards in the direction of the arrow with a velocity of 70 feet per second. Now, if the resistance of the air be neglected, the velocity in the horizontal direction will be uniform, and the projectile will pass over equal spaces in equal times. Let *A 1* represent 70 feet, or the space passed over in one second. At the end of five seconds, if gravity had not acted upon the projectile, it

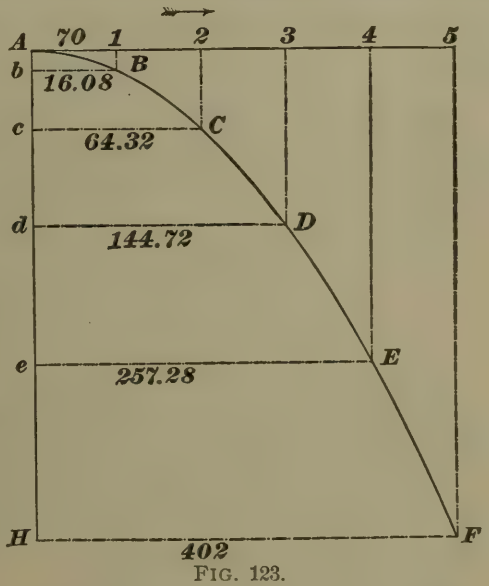

FIG. 123.

would have been at 5, but as gravity has acted, it *falls* 16.08 feet the first second; at the end of the second second it has fallen 64.32 feet, etc.

Let *A b* represent the fall in one second—that is, 16.08 feet, drawn to the same scale as *A 1*, which represents 70 feet. Now, complete the parallelogram *A 1 B b*, and *B* will be the point which the projectile has reached at the end of one second. If *A c* represents 64.32 feet, and the parallelogram *A 2 C c* is completed, the projectile will be at *C* at the end of the second second. Proceeding in this manner, find the points *D*, *E*, and *F*, the positions of the projectile at the end of *3*, *4*, and *5* seconds, respectively. Drawing the curve *A B C D E F* through the points thus found, it represents the path of the projectile. This curve is called **a parabola.**

The distance *H F* is the *range*, and, as is easily seen, *equals the time in seconds multiplied by the original velocity in feet per second.*

900. If the height *A H* and the initial velocity are given, and it is desired to find the range *H F*, *calculate the time that it will take to fall through a height equal to the given height, and multiply the time thus found by the initial velocity.*

EXAMPLE.—A cannon ball is fired in a horizontal direction with an initial velocity of 1,500 feet per second. If the mouth of the cannon is 25 feet above the ground, what is its range?

SOLUTION.—Applying formula **18,** Art. **896,**

$$t = \sqrt{\frac{2h}{g}} = \sqrt{\frac{2 \times 25}{32.16}} = 1.247 \text{ seconds, nearly.}$$

$$\text{Range} = v\,t = 1{,}500 \times 1.247 = 1{,}870.5 \text{ feet.} \quad \text{Ans.}$$

EXAMPLE.—A projectile has an initial velocity of 90 feet per second. If it is desired to strike an object 15 feet away, how far below the horizontal line of direction must the object be located?

SOLUTION.—The object must be located as far below as the distance that the body would fall, through the action of gravity, during the time it would take in passing over a distance of 15 feet at a velocity of 90 feet per second.

Hence, $15 \div 90 = \frac{1}{6}$ of a second. Applying formula **17,** Art. **896,** $h = \frac{1}{2} g t^2 = \frac{1}{2} \times 32.16 \times (\frac{1}{6})^2 = .447$ foot, nearly, $= 5.36$ inches. Ans.

EXAMPLES FOR PRACTICE.

1. A body starts from a state of rest, and falls freely for nine seconds; how far will it fall? Ans. 1,302.48 ft.

2. What velocity must a body have in order to carry it upwards 500 feet, vertically? Ans. 179.33 ft. per sec.

3. A baseball is thrown vertically upwards to a height of 200 feet; how long a time must elapse before it strikes the ground? Ans. 7.05 sec.

4. What will be the velocity of a freely falling body at the end of 6 seconds? Ans. 192.96 ft. per sec.

5. A baseball is thrown horizontally 5 feet above the ground, with a velocity of 80 feet per second; what is its range? Ans. 44.61 ft.

6. A leaden bullet falls from a tower 100 feet high; with what velocity will it strike the ground? Ans. 80.2 ft. per sec.

7. A bullet is dropped from a high tower. If it takes $4\frac{1}{4}$ seconds to reach the ground, how high is the tower? Ans. 290.445 ft.

8. A freely falling body has a velocity of 400 feet per second; how long has it been falling? Ans. 12.438 sec.

CENTRIFUGAL FORCE.

901. If a body be fastened to a string and whirled so as to give it a circular motion, there will be a pull on the string, which will be greater or less according as the velocity increases or decreases. The cause of this pull on the string will now be explained.

Suppose that the body is revolved horizontally, so that the action of gravity upon it will always be the same. According to the first law of motion, a body put in motion tends to move in a straight line unless acted upon by some other force, causing a change in the direction. When a body moves in a circle the force that causes it to move in a circle instead of a straight line is exactly equal to the tension of the string. If the string were cut, the pulling force that drew it away from the straight line would be removed and the body would then "fly off at a tangent"—that is, it would move in a straight line tangent to the circle, as shown in Fig. 124.

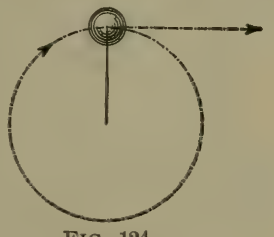

FIG. 124.

902. Since, according to the third law of motion, every action has an equal and opposite reaction, we call that force

which acts as an equal and opposite force to the pull of the string the **centrifugal force,** and it acts *away* from the center of motion.

903. The other force or tension of the string is called the **centripetal force,** and it acts *towards* the center of motion. It is evident that these two forces acting in opposite directions tend to pull the string apart, and, if the velocity be increased sufficiently, the string will break. It is also evident that no body can revolve without generating centrifugal force. The value of the centrifugal force of any revolving body, expressed in pounds, is

$$F = .00034\ W R N^2, \qquad \textbf{(19.)}$$

in which F = centrifugal force;

W = total weight of body in pounds;

R = radius, usually taken as the distance between the center of motion and the center of gravity of the revolving body, in feet;

N = number of revolutions per *minute.*

904. In calculating the centrifugal force tending to burst a fly-wheel, it is the usual practice to consider one-half the rim of the wheel only, and not to take the arms and hub of the wheel into account. In this case, R is taken as the *distance between the inside edge of the rim and the center of the shaft* and the whole is divided by 3.1416.

NOTE.—The general formula for centrifugal force is $F = \frac{m v^2}{R}$, where m = the mass of the revolving body, v = velocity of center of gravity of body in feet per second, and R = radius, as above. Formula **19,** Art. **903,** is easily derived from this. Thus: $m = \frac{W}{g}$; $N = \frac{60\ v}{2\pi R}$, or $v = \frac{2\pi R N}{60}$; hence, $F = \frac{m}{R} v^2 = \frac{W}{g R}\left(\frac{2\pi R N}{60}\right)^2 = .00034\ W R N^2$.

EXAMPLE.—What would be the centrifugal force tending to burst a cast-iron fly-wheel whose outside diameter was 10 feet, width of face 20 inches, and thickness of rim 6 inches, turning at the rate of 80 revolutions per minute?

SOLUTION.—First calculate the weight of one-half the rim. The diameter of the rim $= 10 \times 12 = 120$ inches; the diameter of the circle midway between the inside and outside diameters of the rim =

$120 - 6 = 114$ inches. The number of cubic inches in the rim $= 114 \times 3.1416 \times 20 \times 6 = 42{,}977$ cubic inches. $42{,}977 \times .261 \times \frac{1}{2} = 5{,}608.5$ pounds = weight = W. $R = \frac{10}{2} - \frac{1}{2} = 4\frac{1}{2}$ feet. $N = 80$.

Hence, $F = .00034\ W\ R\ N^2 \div 3.1416 = .00034 \times 5{,}608.5 \times 4\frac{1}{2} \times 80^2 \div 3.1416 = 17{,}481+$ pounds. Ans.

STATICS.

905. **Statics** may be defined as that branch of Mechanics which treats of bodies at rest or of bodies moving with a *uniform* velocity, when these bodies are acted upon by forces. A body is in **static equilibrium** when the resultant of *all* of the forces acting upon the body is zero.

MOMENTS OF FORCES.

906. If from any point O, Fig. 125, a perpendicular be drawn to the line of action of a force, the product of the magnitude of the force and the length of the perpendicular is called the **moment of the force** *about the point* O.

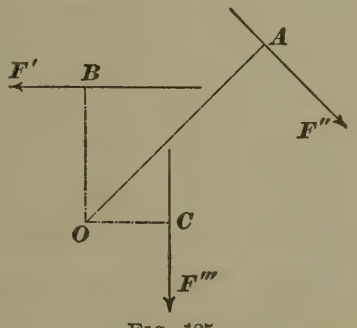

FIG. 125.

Thus, in the figure, the moment of the force F' about the point O is $F' \times O\,B$; of the force F'' about the point O is $F'' \times O\,A$, and of F''' is $F''' \times O\,C$.

907. The use of the moment will be explained further on, when the necessity arises for using it. The point O is called the **center of moments.**

908. When two *equal* forces act in parallel lines, but in opposite directions, they constitute what is called a **couple.**

909. In Fig. 126, the equal and parallel forces F' and F'', acting in opposite directions (one up and the other down), form a couple. It is easy to see that if they were joined by a connection, as $A\,B$, that they would tend to turn $A\,B$ about the point C, midway between F' and F''. The moment

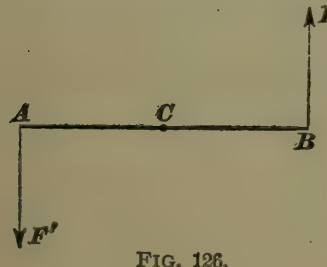

FIG. 126.

of a couple about *any* point is always the same, and is equal to *the product of one of the equal forces into the perpendicular distance between the two forces.*

Thus, the moment of the couple in the figure equals F' or F'' multiplied by $A\ B$. An example of a couple would be a wrench applied to a nut. Here, two opposite and parallel sides of the wrench act in parallel, but opposite, directions, against two parallel sides of the nut.

CENTER OF GRAVITY.

910. *The* ***center of gravity*** *of a body is that point at which the body may be balanced, or it is the point at which the whole weight of a body may be considered as concentrated.*

In a moving body, the line described by its center of gravity is always taken as the path of the body. In finding the distance that a body has moved, the distance that the center of gravity has moved is taken.

911. The definition of the center of gravity of a body may be applied to a system of bodies, if they are considered as being connected at their centers of gravity.

If w and W, Fig. 127, be two bodies of known weights, their center of gravity will be at C. The point C may be readily determined, as follows: Take C as the center of moments; then, since the weights are to balance each other, the moment of W about C must equal the moment of w about C; or, in other words, $W \times C\ W = w \times C\ w$.

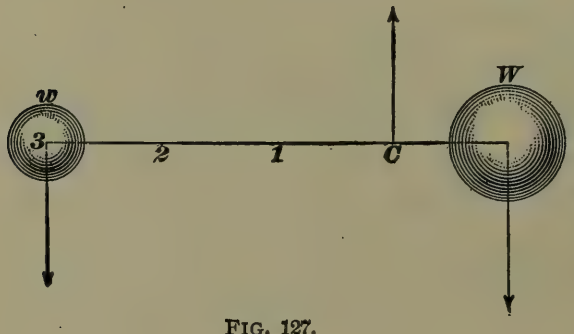

FIG. 127.

If the distance between the centers of gravity of W and w is known, it is very easy to find $C\ w$ and $C\ W$. For

Let l = the distance wW between the centers of the bodies ;

l_1 = the short arm CW ;

w = weight of small body ;

W = weight of large body.

Then, since $wC = l - l_1$, we have, taking the moments about the point C,

$$Wl_1 = w(l - l_1) = wl - wl_1 \text{ ; whence,}$$

$$Wl_1 + wl_1 = (W + w)l_1 = wl, \text{ or}$$

$$l_1 = \frac{wl}{W + w}. \qquad \textbf{(20.)}$$

EXAMPLE.—In Fig. 127, $w = 10$ pounds, $W = 30$ pounds, and the distance between their centers of gravity is 36 inches; where is the center of gravity of both bodies situated?

SOLUTION.—Applying formula **20,**

$$CW = l_1 = \frac{wl}{W + w} = \frac{10 \times 36}{30 + 10} = 9 \text{ inches;}$$

hence, the center of gravity is 9 inches from the center of the larger body. Ans.

The general method for finding the short arm CW is, then, as follows : *Multiply the weight of the smaller body by the distance between the centers of the two bodies, and divide this product by the sum of the weights of the two bodies.*

912. It is now very easy to extend this principle, to the finding of the center of gravity of any number of bodies when their weights and the distances apart of their centers of gravity are known, by applying the principle of finding the resultant of several forces; that is, by finding the center of gravity of two of the bodies, as W_1 and W_4 in Fig. 128. at C_1.

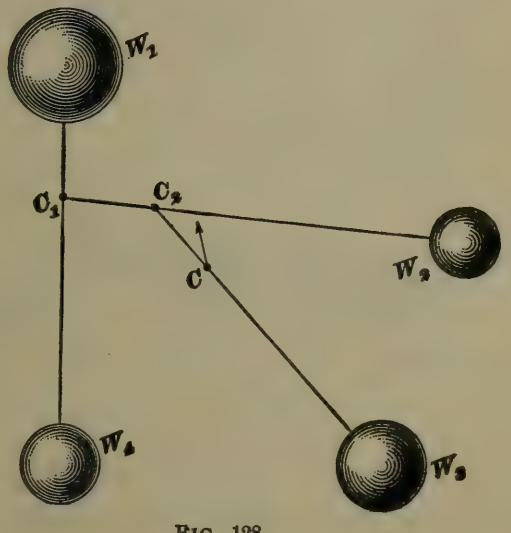

FIG. 128.

Assume that the weight of both bodies is concentrated at C_1, and find the center of gravity of this combined weight at C_1 and of W_2 to be at C_2; then, find that the center of gravity of the combined weights of W_1, W_4, and W_2 (concentrated at C_2) and W_3 to be at C, and C will be the center of gravity of the four bodies.

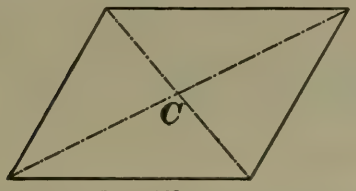

FIG. 129.

913. To find the center of gravity of any parallelogram : *Draw the two diagonals, Fig. 129, and their point of intersection C will be the center of gravity.*

914. To find the center of gravity of a triangle, as *A B C*, Fig. 130 : *From any vertex, as A, draw a line to the middle point D of the opposite side B C. From one of the other vertexes, as C, draw a line to F, the middle point of the opposite side A B ; the point of intersection, O, of these two lines, is the center of gravity.*

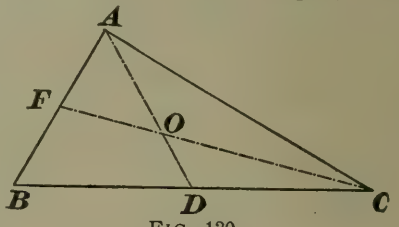

FIG. 130.

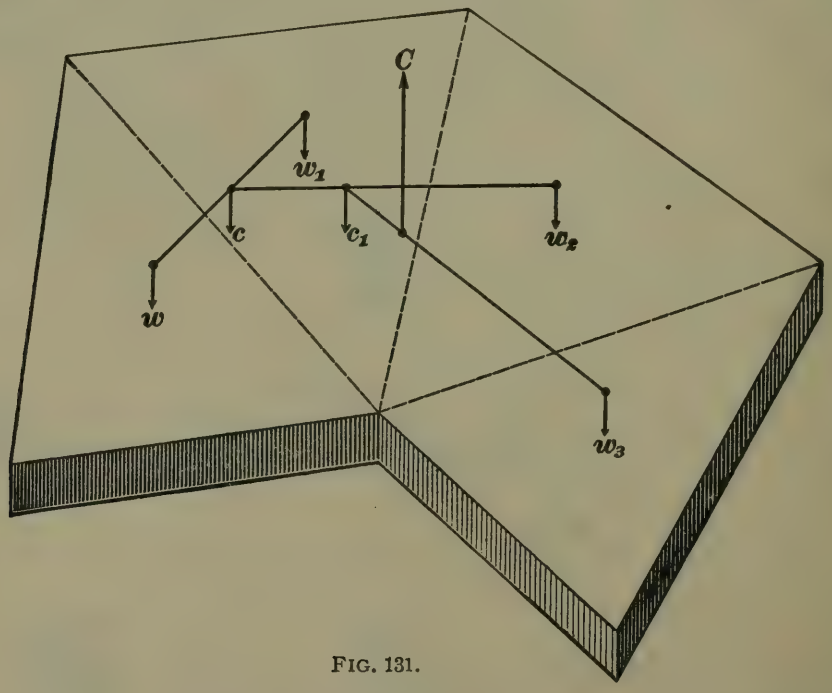

FIG. 131.

It is also true that the distance $D\,O = \frac{1}{3}\,D\,A$, and that

$F\ O = \frac{1}{3}\ F\ C$, and the center of gravity could have been found by drawing from any vertex a line to the middle point of the opposite side, and measuring back from that side $\frac{1}{3}$ of the length of the line.

The center of gravity of any regular plane figure is the same as the geometrical center.

915. To find the center of gravity of any irregular plane figure, but of uniform thickness throughout, divide one of the parallel surfaces into triangles, parallelograms, circles, ellipses, etc., according to the shape of the figure; find the area and center of gravity of each part separately, and combine the centers of gravity thus found, as in the case of more than two bodies whose weights were known, except that the area of each part is used instead of their weights. See Fig. 131.

916. Center of Gravity of a Solid.—In a body free to move, the center of gravity will lie in a vertical plumb

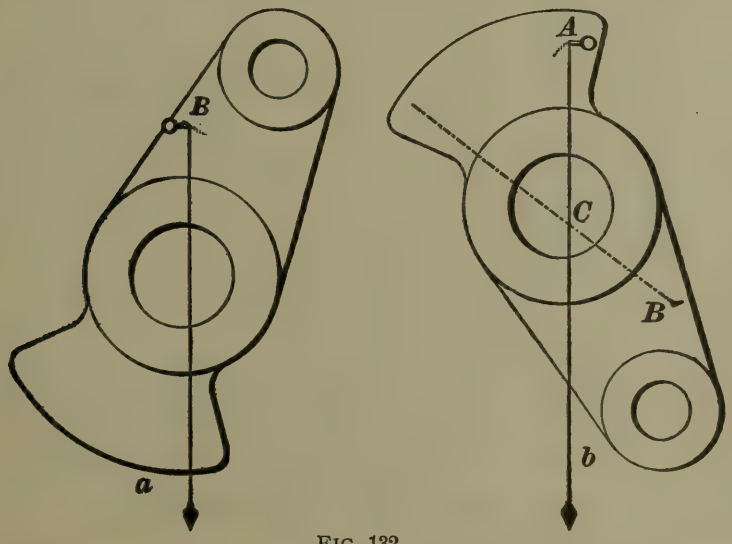

FIG. 132.

line drawn through the point of support. Therefore, to find the position of the center of gravity of an irregular solid, as the crank, Fig. 132, suspend it at some point, as B, so that it will move freely. Drop a plumb line from the point of suspension, and mark its direction. Suspend the body at another point, as A, and repeat the process. The

intersection of the two lines will be directly over the center of gravity.

Since the center of gravity depends wholly upon the shape and weight of a body, it may be without the body, as in the case of a circular ring, whose center of gravity is at the center of the circumference of the ring.

EQUILIBRIUM.

917. When a body is at rest, all of the forces which act upon it are said to *balance* one another, or to be in **equilibrium.** The most important of the forces is gravity, which acts upon every molecule of the body.

918. There are three states of equilibrium : **Stable, unstable,** and **neutral.**

919. A body is in **stable equilibrium** when, if slightly displaced from its position of rest, *it tends to return to that position.*

For example, a cube, a cone resting on its base, a pendulum, etc.

If a body is in **stable equilibrium,** *its center of gravity is raised when it is displaced.*

920. A body is in **unstable equilibrium** when, if slightly displaced from its position of rest, *it tends to fall farther from that position.*

For example, a cone standing upon its point, an egg balanced upon its end, etc.

Any movement, however slight, lowers *the center of gravity* when the body is in unstable equilibrium.

921. A body is in **neutral equilibrium** when it has *no tendency to move either way*, in the direction of its motion, after being slightly displaced.

For example, a sphere of uniform density ; a cone resting on its side.

922. A vertical line drawn through the center of gravity of a body is called the **line of direction.** So long as the line of direction falls within the base, the body will stand. When the line of direction falls without the base, the body will fall.

Let $A\ C\ B$, Fig. 133, be a cylinder whose base is oblique to the center line $B\ O\ D$; and let O be the center of gravity of this cylinder.

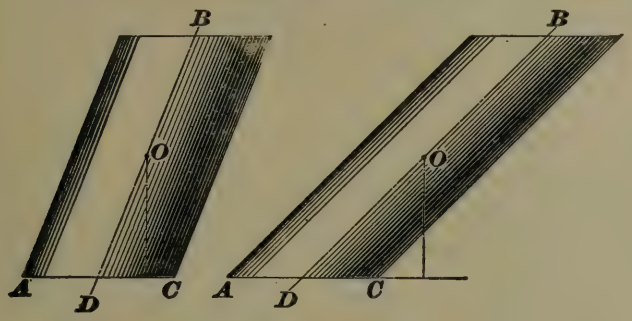

FIG. 133.

So long as the perpendicular through O falls between A and C, the cylinder will stand, but the instant that it falls without the base, the cylinder will fall.

The center of gravity of a body always tends to seek its lowest point.

EXAMPLES FOR PRACTICE.

1. There are three weights in a straight line. The first weighs 40 lb.; the second, 16 lb., and the third, 50 lb. Distance between the first and second is 6 ft., and between the second and third, 10 ft. Where is the center of gravity? Ans. 8 ft. 5.434 in. from the 40-lb. weight.

2. Find the perpendicular distance between the center of gravity and the longer side of a triangle whose sides are 7 ft., 10 ft., and 15 ft. long. Solve graphically. Ans. 1.31 ft.

3. A rectangle, 2 ft. long and 1 ft. wide, has equal weights of 50 lb. each, suspended from two of its diagonally opposite corners. A weight of 60 lb. and another of 80 lb. are suspended from the other two corners. Supposing the rectangle to be without weight, where is the center of gravity? Ans. { On the diagonal joining the 60-lb. and 80-lb. weights, 1.118 in. from the center.

4. Find the center of gravity of a quadrilateral whose sides are 14, 15, 16, and 18 in. long, the angle between the 18 and 16 in. sides being 45°. Give the perpendicular distance from the 18 in. side. Ans. 5.46 in.

SIMPLE MACHINES.

THE LEVER.

923. A **lever** is a bar capable of being turned about a pin, pivot or point, as in Figs. 134, 135 and 136.

924. The object W to be lifted is called the **weight**; the force used P is called the **power**; and the point or pivot F is called the **fulcrum.**

925. That part of the lever between the weight and the fulcrum, or $F\ b$, is called the **weight arm,** and the part between the power and the fulcrum, or $F\ c$, is called the **power arm.**

926. Take the fulcrum, or point F, as the center of moments; then, in order that the lever shall be in equilibrium, the moment of P about F, or $P \times F\ c$, must equal the moment of W about F, or $W \times F\ b$. That is, $P \times F\ c = W \times F\ b$, or, in other words, *the power multiplied by the power arm equals the weight multiplied by the weight arm.*

927. If F be taken as the center of a circle, and arcs be described through b and c, it will be seen that, if the weight arm is moved through a certain angle, the power arm will move through the same angle; also, that the vertical distance that W moves will be the sine of this angle, in a circle whose radius is the weight arm, and that the vertical distance that P moves will be the sine of the same angle in a circle whose radius is the power arm. From this it is seen that the power arm is proportional to the distance through

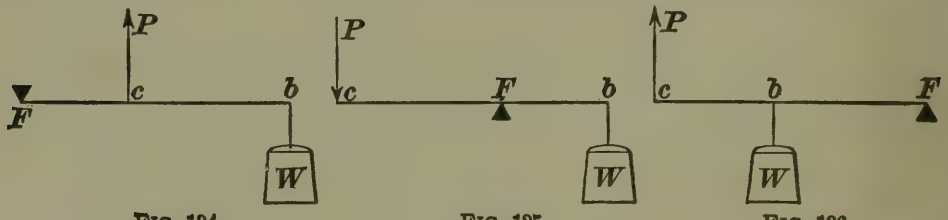

FIG. 134. FIG. 135. FIG. 136.

which the power moves, and the weight arm is proportional to the distance through which the weight moves.

Hence, instead of writing $P \times F\ c = W \times F\ b$, we might have written it $P \times$ distance through which P moves $= W \times$ distance through which W moves. This is the general law of all machines, and can be applied to any mechanism, from the simple lever up to the most complicated arrangement. Stated in the form of a rule, it is as follows:

Rule VI.—*The power multiplied by the distance through which it moves equals the weight multiplied by the distance through which it moves.*

EXAMPLE.—If the weight arm of a lever is 6 inches long and the power arm is 4 feet long, how great a weight can be raised by a force of 20 pounds at the end of the power arm?

SOLUTION.—4 feet = 48 inches. Hence, $20 \times 48 = W \times 6$, or $W =$ 160 pounds. Ans.

EXAMPLE.—(*a*) What is the ratio between the power and the weight in the last example? (*b*) In the last example, if P moves 24 inches, how far does W move? (*c*) What is the ratio between the two distances?

SOLUTION.—(*a*) 20 : 160 = 1 : 8; that is, the weight moved is 8 times the power. Ans.

(*b*) $20 \times 24 = 160 \times x$. $x = \frac{480}{160} = 3$ inches, the distance that W moves. Ans.

(*c*) 3 : 24 = 1 : 8, or the ratio is 1 : 8. Ans.

928. The law which governs the straight lever also governs the bent lever; but care must be taken to determine the true lengths of the lever arms, which are in every case *the perpendicular distances from the fulcrum to the line of direction of the weight or power.*

Thus, in Figs. 137, 138, 139, and 140, $F\,c$ in each case represents the power arm, and $F\,b$ the weight arm.

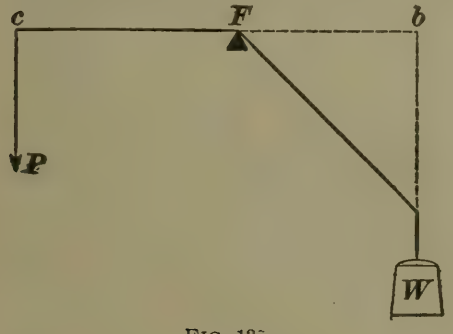

FIG. 137.

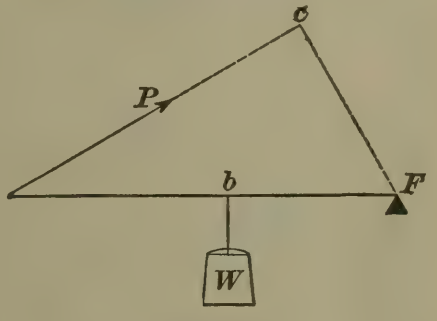

FIG. 138.

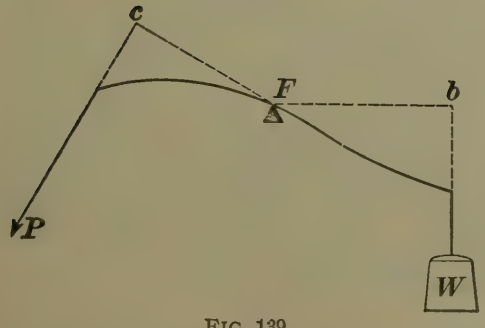

FIG. 139.

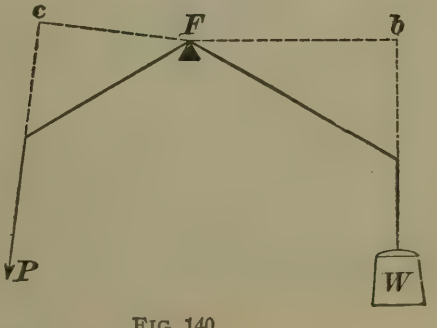

FIG. 140.

929. The Compound Lever.—A **compound lever** is a series of single levers arranged in such a manner that

when a force is applied to the first it is communicated to the second, and from this to the third, and so on.

Fig. 141 shows a compound lever. It will be seen that when a power is applied to the first lever at P it will be communicated to the second lever at P, from this to the third lever at P, and thus raise the weight W.

The weight which the power of the first lever could raise acts as the power of the second, and the weight which this could raise by means of the second lever acts as the power of the third lever, and so on, no matter how many single levers make up the compound lever.

In this case, as in every other, the power multiplied by the distance through which it moves equals the weight multiplied by the distance through which it moves.

Hence, if we move the P end of the lever, say, 4 inches, and the W end moves $\frac{1}{5}$ of an inch, we know that the ratio

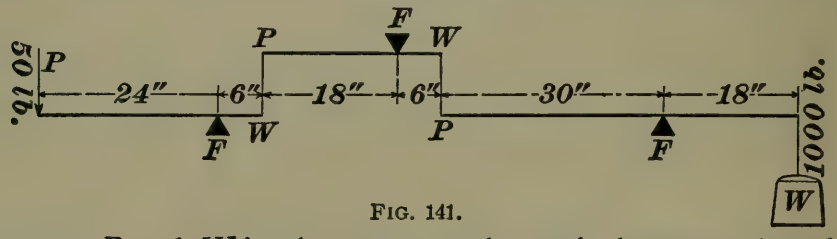

FIG. 141.

between P and W is the same as the ratio between $\frac{1}{5}$ and 4; that is, 1 to 20, and, hence, that 10 pounds at P would balance 200 pounds at W, without measuring the lengths of the different lever arms. If the lengths of the lever arms are known, the ratio between P and W may be readily obtained from the following rule:

Rule VII.—*The continued product of the power and each power arm equals the continued product of the weight and each weight arm.*

EXAMPLE.—If, in Fig. 141, the power arms $PF = 24$ inches, 18 inches, and 30 inches, and weight arms $WF = 6$ inches, 6 inches, and 18 inches, (*a*) how great a force must be applied at the free end P to raise 1,000 pounds at W? (*b*) What is the ratio between P and W?

SOLUTION.— $P \times 24 \times 18 \times 30 = 1{,}000 \times 6 \times 6 \times 18$,

$$\text{or } P = \frac{648{,}000}{12{,}960} = 50 \text{ pounds. Ans.}$$

50 : 1,000 = 1 : 20, or $P : W = 1 : 20$. Ans.

THE WHEEL AND AXLE.

930. The **wheel and axle** consists of *two cylinders of different diameters, rigidly connected*, so that they turn together about a common axis, as in Fig. 142. Then, as

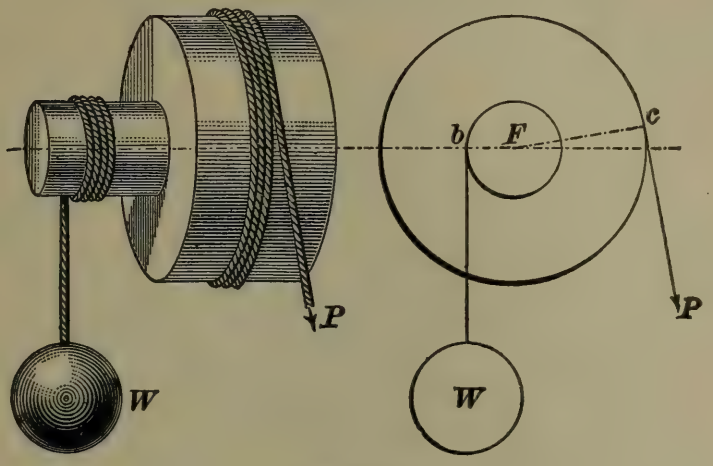

FIG. 142.

before, $P \times$ distance through which it moves $= W \times$ distance through which it moves; and, since these distances are proportional to the radii of the power cylinder and weight cylinder, $P \times F\,c = W \times F\,b$.

It is not necessary that an entire wheel be used; an arm, projection, radius, or anything which the power causes to revolve in a circle, may be considered as the wheel. Consequently, if it is desired to hoist a weight with a windlass, Fig. 143, the force is applied to the handle of the crank, and the distance between the center line of the crank-handle and the axis of the drum corresponds to the radius of the wheel.

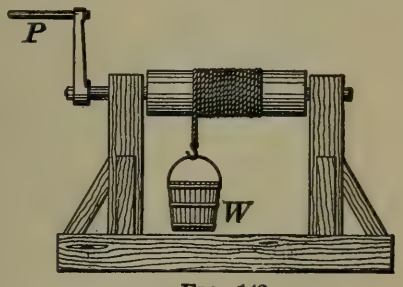

FIG. 143.

EXAMPLE.—If the distance between the center line of the handle and the axis of the drum, in Fig. 143, is 18 inches, and the diameter of the drum is 6 inches, what force will be required at P to raise a load of 300 pounds?

SOLUTION.— $P \times 18 = 300 \times \frac{6}{2}$, or $P = 50$. Ans.

931. Wheelwork.—A combination of wheels and axles, as in Fig. 144, is called a **train.** The wheel in a train to which motion is imparted from a wheel on another shaft, by such means as a belt or gearing, is called the **driven wheel** or **follower;** the wheel which imparts the motion is called the **driver.**

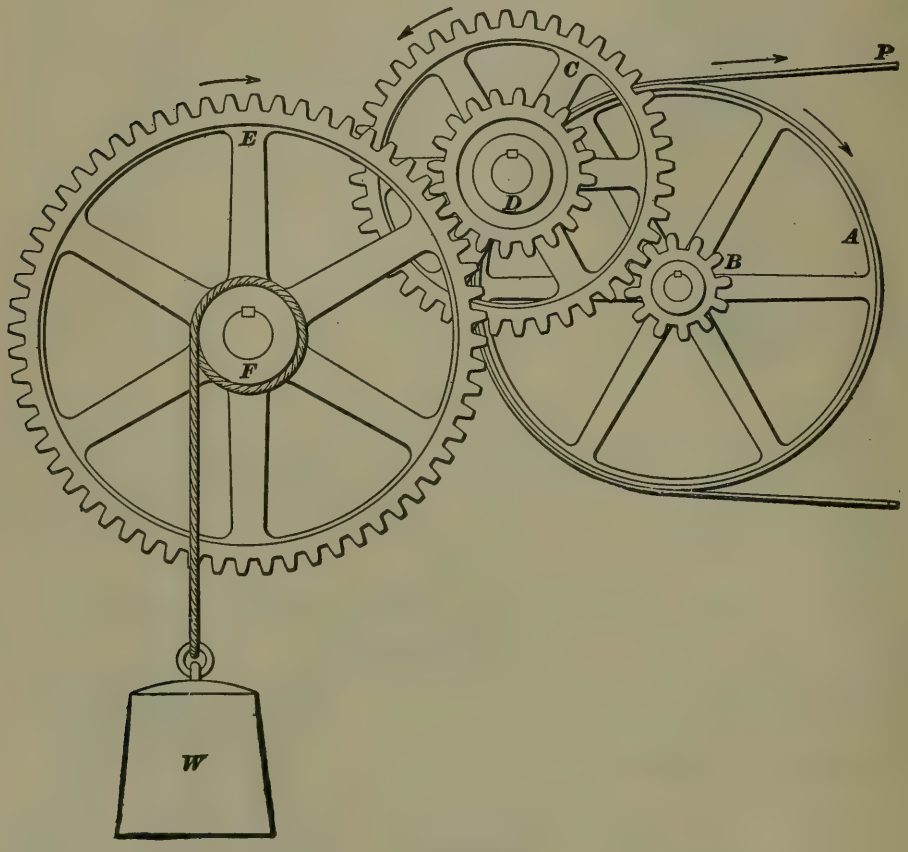

FIG. 144.

932. It will be seen that the wheel and axle bears the same relation to the train that the simple lever does to the compound lever; that is, *the continued product of the power and the radii of the driven wheels equals the continued product of the weight, the radius of the drum that moves the weight, and the radii of the drivers.*

EXAMPLE.—If the radius of the wheel *A* is 20 inches, of *C*, 15 inches, and of *E*, 24 inches; if the radius of the drum *F* is 4 inches, of the

pinion D, 5 inches, and of the pinion B, 4 inches, how great a weight will a force of 1 pound at P raise?

SOLUTION.— $1 \times 20 \times 15 \times 24 = W \times 4 \times 5 \times 4$, or $W = \frac{7,200}{80} = 90$ pounds. Ans.

933. Hence, also, if W were raised one inch, P would move 90 inches, or P would have to move 90 inches to raise W one inch. It is now clear that another great law has made itself manifest, and that is that, *whenever there is a gain in power without a corresponding increase in the initial force, there is a loss in speed.*

In the last example, if P were to move the entire 90 inches in one second, W would move only 1 inch in one second. The same principle may be applied to any machine.

THE PULLEY.

934. A **pulley** is a wheel turning on an axle, over which a cord, chain, or band is passed in order to transmit the force through the cord, chain, or band.

935. The frame which supports the axle of the pulley is called the **block.**

936. A **fixed pulley** is one whose block is not movable, as in Fig. 145. In this case, if the weight W be lifted by pulling down P, the other end of the cord W will evidently move the same distance upwards that P moves downwards; hence, P must equal W.

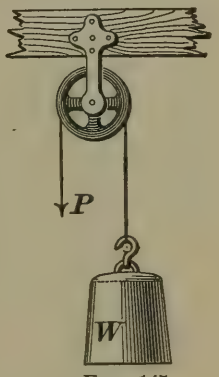

FIG. 145.

937. A **movable pulley** is one whose block is movable, as in Fig. 146. One end of the cord is fastened to the beam, and the weight is suspended from the pulley, the other end of the cord being drawn up by the application of a force P. A little consideration will show that if P moves through a certain distance, say 1 foot, W will move through *half* that

distance, or 6 inches; hence, a pull of 1 pound at P will lift 2 pounds at W.

FIG. 146.

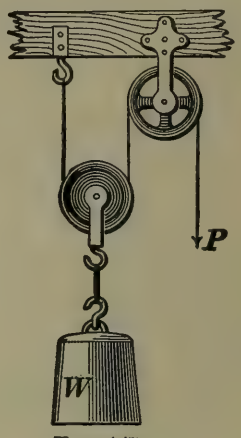

FIG. 147.

The same would also be true if the free end of the cord were passed over a *fixed pulley*, as in Fig. 147, in which case the fixed pulley merely changes the direction in which P acts, so that a weight of 1 pound hung on the free end of the cord will balance 2 pounds hung from the *movable pulley*.

938. A **combination of pulleys,** as shown in Fig. 148, is sometimes used. In this case there are three movable and three fixed pulleys, and the amount of movement of W, owing to a certain movement of P, is readily found.

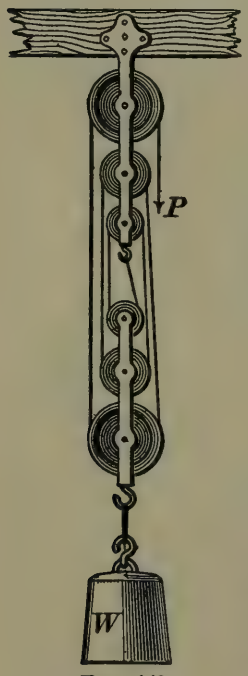

FIG. 148.

It will be noticed that there are *six parts* of the rope, not counting the free end; hence, if the movable block be lifted 1 foot, P remaining in the same position, there would be 1 foot of slack in each of the six parts of the rope, or *six feet* in all. Therefore, P would have to move 6 feet in order to take up this slack, or P moves six times as far as W. Hence, 1 pound at P will support 6 pounds at W, since the *power multiplied by the distance through which it moves equals the weight multiplied by the distance through which it moves.* It will also be noticed that there are three movable pulleys, and that $3 \times 2 = 6$.

Rule VIII.—*In any combination of pulleys where one continuous rope is used a load on the free end will balance a weight on the movable block as many times as great as the load on the free end as there are parts of the rope supporting the load—not counting the free end.*

The above law is good, whether the pulleys are side by side, as in the ordinary *block and tackle*, or whether they are arranged as in the figure.

EXAMPLE.—In a block and tackle having five movable pulleys, how great a force must be applied to the free end of the rope to raise 1,250 pounds?

SOLUTION.—Since there are 5 movable pulleys, there are 10 parts of the rope supporting them, and 1 pound on the free end will balance 10 pounds on the movable block; therefore, the ratio of P to W is 1 : 10, and $P = \frac{1,250}{10} = 125$ pounds. Ans.

939. In Fig. 149 is shown an arrangement called a **differential pulley.** It will be seen that if a force be applied at P, so as to pull the point P down to D, the rope or chain will wind up on the large pulley A, and unwind from the smaller pulley B, and since C is a movable pulley, the weight W will move an amount equal to one-half the difference between the amount of winding on A and unwinding on B.

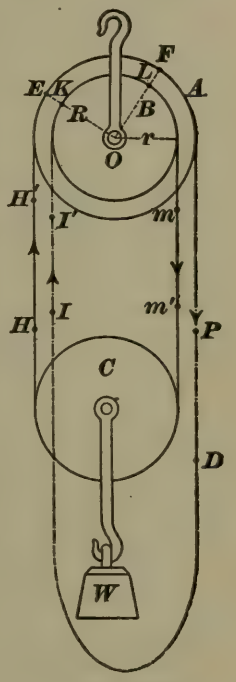

FIG. 149.

Let the radius of A be represented by R, and of B by r; then, when P is pulled down to D, a point E on the pulley A will move through a certain angle, $E\ O\ F$, the length of the arc $E\ F$ being equal to the distance $P\ D$. Any point on the pulley B, which is fastened to A, will turn through the same angle; and the difference between the arc $K\ L$, through which this point turns, and the arc $E\ F$ will be proportional to the difference of the radii R and r.

When P moves down to D, the point H on the other side will move up through the same distance to H'. The point I will move up to I', a distance equal to the length

of the arc $K\,L$, and m will fall through the same distance to m', thus causing the weight W to be *raised one half the difference between m m' and P D.* The ratio between the distances through which W and P move will be

$$\frac{\text{arc } E\,F - \text{arc } K\,L}{2} : E\,F, \text{ or } \frac{R-r}{2} : R.$$

Hence, $W \times \frac{R-r}{2} = P \times R$, or $W = \frac{2\,P\,R}{R-r}$. **(21.)**

EXAMPLE.—If $R = 7$ inches, and $r = 6\frac{1}{2}$ inches, how much weight can be raised at W with a force of 50 pounds at P?

SOLUTION.— $W = \frac{2\,P\,R}{R-r} = \frac{2 \times 50 \times 7}{7 - 6\frac{1}{2}} = 1{,}400$ pounds. Ans.

THE INCLINED PLANE.

940. An **inclined plane** is a slope or a flat surface, making an angle with a horizontal line.

Three cases may arise in practice with the inclined plane:

I. When the power acts parallel to the plane, as in Fig. 150.

II. When the power acts parallel to the base, as in Fig. 151.

III. When the power acts at an angle to the plane, or to the base, as in Fig. 152.

Case I.—In Fig. 150, the relation existing between the power and the weight is easily found. The weight ascends a distance equal to $c\,b$, or the height of the inclined plane, while the power descends through a distance equal to $a\,b$, or the length of the inclined plane. Therefore, the *power multiplied by the length of the inclined plane equals the weight multiplied by the height of the inclined plane.* Hence, if the length $a\,b = 40$ feet, and the height $c\,b = 20$ feet, $W \times 20 = P \times 40$, or 1 pound at P will balance 2 pounds at W.

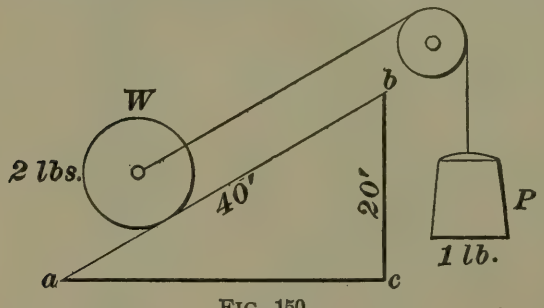

FIG. 150.

Case II.—In Fig. 151, the power is supposed to act parallel to the base for any position of W, the pulley being shifted up and down; therefore, while W is moving from the level $a\,c$ to b, or through the height $c\ b$ of the inclined plane, P will move a distance downwards, relative to the axis of the pulley, equal to the length of the base $a\,c$. Hence, when the power acts parallel to the base,

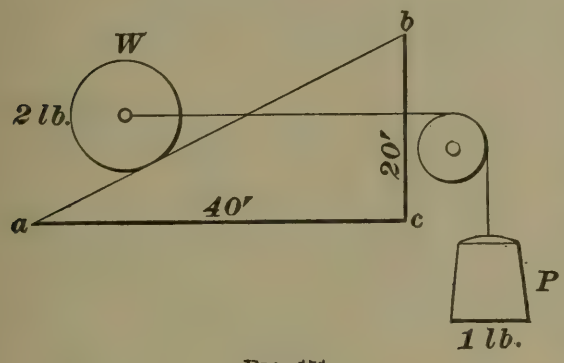

FIG. 151.

$W \times$ *height of the inclined plane* $= P \times$ *length of base.*

If the length of the base is 40 feet, and the height of the inclined plane is 20 feet, $W \times 20 = P \times 40$, and 1 pound at P will balance 2 pounds at W.

Case III.—For Fig. 152 no rule can be given. The ratio of the power to the weight must be determined for every position of W by means of the triangle or parallelogram of forces.

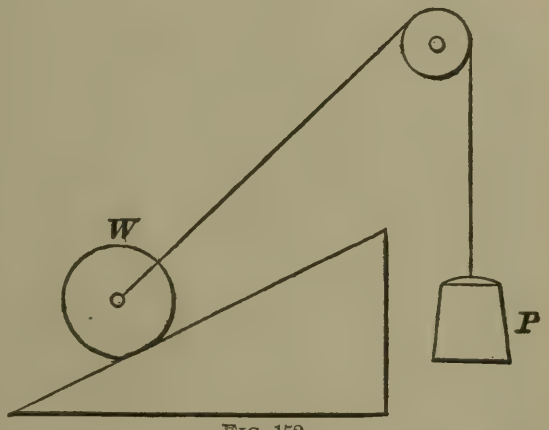

FIG. 152.

This case will be explained by means of an example, as it affords a splendid illustration of the principle of *resolution of forces.*

EXAMPLE.—In Fig. 153, a body W is shown resting on an inclined plane $A\,B$, whose dimensions are marked on the cut; the weight P acts to pull the body up the plane by means of the rope r and pulley p. It is required to find what the weight of P must be in order to start W up the plane. Suppose W weighs 120 pounds, and that friction is neglected. It is also required to find the perpendicular pressure which W exerts against the plane.

SOLUTION.—Through the point a, the center of gravity of W, draw $a\,b$ vertical, and make it of such a length as to represent 120 pounds to a convenient scale, say 60 pounds = 1 inch. Drawing $a\,c$ and $c\,b$,

respectively, parallel and perpendicular to the plane, $a\,c$ represents the magnitude of the force which must be exerted parallel to $A\,B$ in order to put the body in equilibrium—i. e., to balance the force which gravity exerts in pulling the body down the plane. If the rope r were parallel to $A\,B$, $a\,c$ would represent the weight of P; but, since r makes an angle with the plane, P will not be equal to $a\,c$. To find what the weight of P must be, draw $a\,d$ parallel to $a\,c$, but indicate it as acting in the opposite direction, or from a to d instead of from a to c. Now

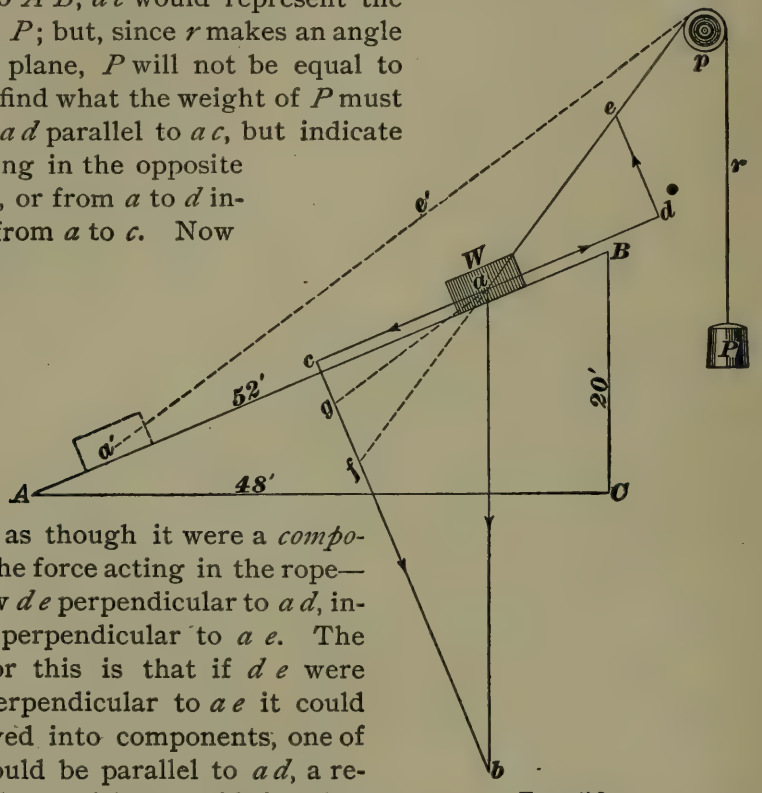

FIG. 153.

treat $a\,d$ as though it were a *component* of the force acting in the rope—i. e., draw $d\,e$ perpendicular to $a\,d$, instead of perpendicular to $a\,e$. The reason for this is that if $d\,e$ were drawn perpendicular to $a\,e$ it could be resolved into components, one of which would be parallel to $a\,d$, a result which we wish to avoid; in other words, we want $d\,e$ perpendicular to the plane. The line $a\,e$, measured to the same scale as $a\,b$, will give the value of P. Measuring it, its length is .89″; hence, $P = .89 \times 60 = 53.4$ pounds. Ans.

To determine the perpendicular pressure against the plane, it will be noticed that $a\,b$ equals the pressure due to gravity. Since $c\,b$ and $d\,e$ are both perpendicular to $A\,B$, they are parallel, and since $d\,e$ acts in the opposite direction to $c\,b$, the actual pressure against the plane is given by the difference between $c\,b$ and $d\,e$. Making $c\,f$ equal to $d\,e$, $f\,b$ represents the perpendicular pressure against the plane when the force P $(= a\,e)$ acts as shown. The length of $f\,b$ is 1.39″; hence, the perpendicular pressure is $1.39 \times 60 = 83.4$ pounds. Ans.

Since $c\,a$ and $a\,d$ are parallel and equal, and $c\,f$ and $d\,e$ are also parallel and equal, it follows that $a\,f$ and $a\,e$ must also be parallel and equal. Consequently, the force P might have been found by drawing $a\,f$ parallel to the direction in which the pull on the rope acts, and $b\,f$ perpendicular to the plane $A\,B$. Thus, suppose that the weight occupies the position shown by the dotted lines. Then, drawing $a\,g$

parallel to $a'e'$, ag represents the weight of P, and gb represents the perpendicular pressure of the body W against the plane. Measuring ag, its length is .79″; hence, $P = .79 \times 60 = 47.4$ pounds. Measuring gb, its length is 1.65″; hence, the perpendicular pressure $= 1.65 \times 60 =$ 99 pounds.

941. The Wedge.— The **wedge** is a movable inclined plane, and is used for moving a great weight a short distance. A common method of moving a heavy body is shown in Fig. 154.

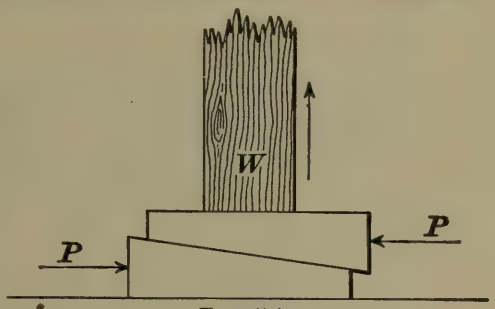

FIG. 154.

Simultaneous blows of equal force are struck on the heads of the wedges, thus raising the weight W. The laws for wedges are the same as for Case II of the inclined plane.

THE SCREW.

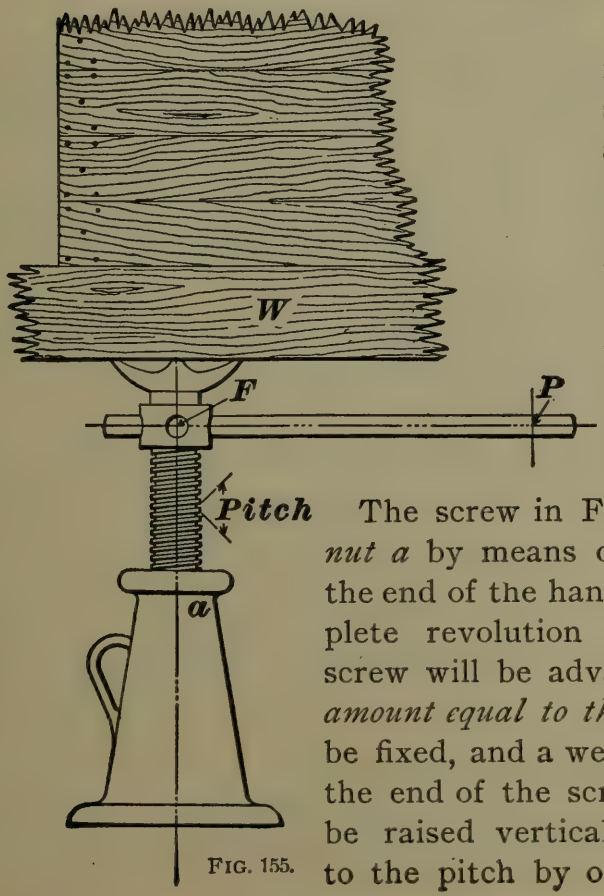

FIG. 155.

942. A **screw** is a cylinder with a spiral groove winding around its circumference. This spiral is called the **thread** of the screw. The distance that the thread is drawn back or advanced in one turn of the screw is called the **pitch** of the screw. The screw in Fig. 155 is turned in a *nut a* by means of a force applied at the end of the handle P. For one complete revolution of the handle, the screw will be advanced lengthwise *an amount equal to the pitch.* If the nut be fixed, and a weight be placed upon the end of the screw, as shown, it will be raised vertically a distance equal to the pitch by one revolution of the

screw. During this revolution the force at P will move through a distance equal to the circumference, whose radius is PF. Hence, $W \times$ pitch of thread $= P \times$ circumference of P.

943. Single-threaded screws of less than 1 inch pitch are generally classified by the number of threads they have in 1 inch of their length. In such cases, *one inch divided by the number of threads equals the pitch;* thus, the pitch of a screw that has 8 threads per inch is $\frac{1}{8}''$; one of 32 threads per inch is $\frac{1}{32}''$, etc.

EXAMPLE.—It is desired to raise a weight by means of a screw having 5 threads per inch. The force applied is forty pounds at a distance of 14 inches from the center of the screw; how great a weight can be raised?

SOLUTION.—Diameter of the circumference passed through by the force $= 14 \times 2 = 28$ inches. Therefore, $W \times \frac{1}{5} = 40 \times 28 \times 3.1416$, or $W = 17{,}593$ pounds. Ans.

VELOCITY RATIO.

944. The ratio of the distance that the power moves to the distance which the weight moves on account of the movement of the power is called the **velocity ratio.**

Thus, if the power is moving 12 inches while the weight is moving 1 inch, the velocity ratio is 12 to 1, or 12; that is, P moves 12 times as fast as W.

945. If the velocity ratio is known, the weight which any machine can raise equals the *power multiplied by the velocity ratio.* If the velocity ratio is 8.7 to 1, or 8.7, $W = 8.7 \times P$, since $W \times 1 = P \times 8.7$.

NOTE.—In all of the preceding cases, including the last, friction has been neglected.

FRICTION.

946. **Friction** is the resistance that a body meets from the surface on which it moves.

947. The **ratio** between the *resistance* to the motion of a body due to friction and the *perpendicular* pressure between the surfaces is called the **coefficient of friction.**

If a weight W, as in Fig. 156, rests upon a horizontal plane, and has a cord fastened to it passing over a pulley a, from which a weight P is suspended, then, if P is just sufficient to start W, the ratio of P to W, or $\frac{P}{W}$, is the *coefficient of friction* between W and the surface it slides upon.

The weight W is the perpendicular pressure, and P is the force necessary to overcome the resistance to the motion of W due to friction.

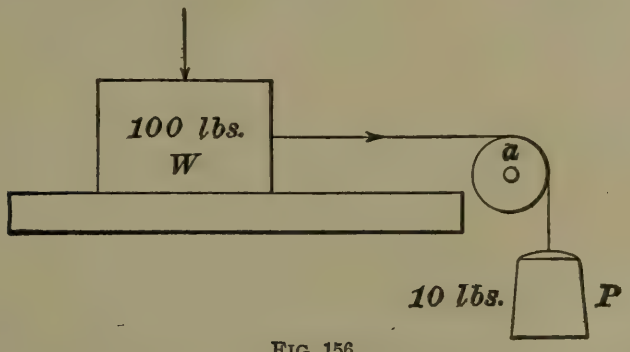

FIG. 156.

If $W = 100$ pounds and $P = 10$ pounds, the coefficient of friction for this particular case would be $\frac{P}{W} = \frac{10}{100} = .1$.

948. Laws of Friction:—

I. *Friction is directly proportional to the perpendicular pressure between the two surfaces in contact.*

II. *Friction is independent of the extent of the surfaces in contact when the total perpendicular pressure remains the same.*

III. *Friction increases with the roughness of the surfaces.*

IV. *Friction is greater between surfaces of the same material than between those of different materials.*

V. *Friction is greatest at the beginning of motion.*

VI. *Friction is greater between soft bodies than between hard ones.*

VII. *Rolling friction is less than sliding friction.*

VIII. *Friction is diminished by polishing or lubricating the surfaces.*

Law I shows why the friction is so much greater on journals after they begin to heat than before. The heat causes the journal to expand, thus increasing the pressure between the journal and its bearing, and, consequently, increasing the friction.

Law II states that, no matter how small the surface may be which presses against another, if the perpendicular pressure is the same, the friction will be the same. Therefore, large surfaces are used where possible; not to reduce the friction, but to reduce the wear and diminish the liability of heating.

For instance, if the perpendicular pressure between a journal and its bearing is 10,000 pounds, and the coefficient of friction is .2, the amount of friction is $10{,}000 \times .2 = 2{,}000$ pounds.

Suppose that one-half the area of the surface of the journal is 80 square inches; then, the amount of friction for each square inch of bearing is $2{,}000 \div 80 = 25$ pounds.

If half the area of the surface had been 160 square inches, the friction would have been the same—that is, 2,000 pounds; but the friction per square inch would have been $2{,}000 \div 160 = 12\frac{1}{2}$ pounds, just one-half as much as before, and the wear and liability to heat would be one-half as great also.

COEFFICIENTS OF FRICTION.

TABLE 17.

Description of Surfaces in Contact.	Disposition of Fibers.	State of the Surfaces.	Coefficient of Friction.
Oak on oak	Parallel	Dry	.48
Oak on oak	Parallel	Soaped	.16
Wrought iron on oak	Parallel	Dry	.62
Wrought iron on oak	Parallel	Soaped	.21
Cast iron on oak	Parallel	Dry	.49
Cast iron on oak	Parallel	Soaped	.19
Wrought iron on cast iron	—	Slightly Unctuous	.18
Wrought iron on bronze	—	Slightly Unctuous	.18
Cast iron on cast iron	—	Slightly Unctuous	.15

EFFICIENCY.

949. The force which is required to raise a weight, or overcome an equal resistance in any machine, is always *greater than this weight or resistance, divided by the velocity ratio of the machine.*

Thus, if there were no friction, a machine whose velocity ratio was 5 would, by an application of 100 pounds of force, raise a weight of 500 pounds.

Now, suppose that the friction in the machine is equivalent to 10 pounds of force, then it would take 110 pounds of force to raise 500 pounds.

If, in the above illustration, friction were neglected, 110 pounds $\times$ 5 = 550 pounds, or the weight that 110 pounds would raise; but, owing to the frictional resistance, it only raised 500 pounds; therefore, we have for the ratio between the two $\frac{500}{550} = .91$. That is, 500 : 550 = .91 : 1.

950. This ratio between the weight actually raised and the applied force multiplied by the velocity ratio is called the **efficiency of the machine.**

Let F = the force applied to the machine;

V = the velocity ratio of the machine;

W = the weight actually lifted, or equivalent resistance overcome;

E = the efficiency of the machine.

$$\text{Then, } \mathbf{E} = \frac{W}{FV}. \qquad (22.)$$

EXAMPLE.—In a machine having a combination of pulleys and gears, the velocity ratio of the whole is 9.75. A force of 250 pounds just lifts a weight of 1,626 pounds; what is the efficiency of the machine?

SOLUTION.—$\mathbf{E} = \frac{W}{FV} = \frac{1,626}{250 \times 9.75} = .6671$, or 66.71 %. Ans.

Since the total amount of friction varies with the load, it follows that the efficiency will also vary for different loads.

EXAMPLE.—A pulley block with a velocity ratio of 7 has an efficiency of 38 % for a load of 3,000 pounds; what power is required to start the load?

SOLUTION.—$\mathbf{E} = \frac{W}{FV}$, or $.38 = \frac{3,000}{7F}$

Hence, $F = \frac{3,000}{38 \times 7} = 1,128$ pounds, nearly. Ans.

EXAMPLES FOR PRACTICE.

1. A wedge is caused to move a weight vertically by means of a screw, which pulls the wedge horizontally on its base. If the screw has 5 threads per inch and the handle is 10 inches long, what force will be necessary to apply to the handle to raise a weight of 1,400 pounds, the height of the wedge being 8 inches, and the length, 14 inches?

Ans. 2.546 lb., nearly.

2. If the distance from the fulcrum to the point at which a force of 35 pounds is applied to a lever is 4 feet, and the distance from the fulcrum to the weight is $1\frac{1}{2}$ inches, how great a weight will the force lift? Ans. 4,320 lb.

3. It is desired to raise a weight of 600 pounds by means of a block and tackle having two fixed and two movable pulleys; what force must be applied at the free end of the rope? Ans. 150 lb.

4. If, in the last example, the free end of the rope be attached to a windlass whose drum is 5 inches in diameter, and which has a handle situated 15 inches from the axis of the drum, what force will be necessary to raise the weight? Ans. 25 lb.

5. It is required to pull a wagon up an inclined plane one mile long. The height of the plane being 120 feet, and the weight of the wagon and load 2,816 pounds, what force will be necessary? Ans. 64 lb.

6. In Fig. 144, the radius of the wheel A is 32 inches, of C, 18 inches, and of E, 30 inches; the radius of the drum F is 10 inches, of the pinion D, 4 inches, and of the pinion B, 6 inches. If P moves 4 feet 6 inches, how far will the weight W move? Ans. $\frac{3}{4}$ in.

7. In the last example, how great a force must be applied at P to raise a weight of 2,160 pounds? Ans. 30 lb.

8. In example 4, if the friction be taken as 22% of the load lifted, what force will be necessary? What will be the efficiency?

Ans. { 30.5 lb.
{ 82%, nearly.

WORK AND ENERGY.

951. Work *is the overcoming of resistance continually occurring along the path of motion.*

Mere motion is not work, but if a body in motion constantly overcomes a resistance, it does work.

952. The **unit of work** *is one pound raised vertically one foot*, and is called one **foot-pound.** All work is measured by this standard. A horse going up hill does an amount of work equal to his own weight, plus the weight of the wagon and contents, plus the frictional resistances

reduced to an equivalent weight, multiplied by the vertical height of the hill. Thus, if the horse weighs 1,200 pounds, the wagon and contents 1,200 pounds, and the frictional resistances equal 400 pounds, then, if the vertical height of the hill is 100 feet, the work done is equal to $(1,200 + 1,200 + 400) \times 100 = 280,000$ foot-pounds.

953. If the force necessary to overcome the resistance be represented by F, the space through which the resistance acts by S, and the work done by U, then $U = F S$.

If $W =$ the weight of a body, and $h =$ the height through which it is raised, $U = W h$. Hence, the work done

$$U = F S = W h. \qquad (23.)$$

954. The *total* amount of work is independent of time, whether it takes one minute or one year in which to do it; but, in order to compare the work done by different machines with a common standard, time must be considered.

When time is considered, the unit of time is always *one minute*, and the unit which measures the capacity of any contrivance for producing work then becomes one **foot-pound per minute.** This unit is called the **unit of power.** The term *power* as here used has a different meaning from that previously given to it, which simply meant force acting to produce motion in simple machines. The student should carefully distinguish between the two. There will be no difficulty in doing this, as the wording of the sentence in which it occurs will always show whether force or work per minute is meant. The power of a machine may always be determined by *dividing the work done in foot-pounds by the time in minutes required to do the work;* i. e.,

$$\text{Power} = \frac{F S}{T}, \qquad (24.)$$

in which F and S have the same values as in formula **23,** and $T =$ the time in minutes. Hence, if a certain machine does, say, 10,000 foot-pounds of work in 10 minutes, its *power* is $10,000 \div 10 = 1,000$ foot-pounds per minute; if another machine does the same work in 5 minutes, its power is $10,000 \div 5 = 2,000$ foot-pounds per minute—just twice as

much. Hence, we say that the power of the second machine is twice that of the first, and understand thereby that if both machines work for the same length of time the second machine will do twice as much work as the first machine.

955. Since the unit of power is very small, and would lead to the use of very large numbers in expressing the power of large machines, the common standard to which all work is reduced is the horsepower, which equals 33,000 units of power.

One ***horsepower*** *is 33,000 foot-pounds per minute; in other words, it is 33,000 pounds raised vertically one foot in one minute, or 1 pound raised vertically 33,000 feet in one minute, or any combination that will give 33,000 foot-pounds in one minute by multiplying the resistance in pounds by the distance in feet through which it is overcome, and dividing by the time in minutes.*

Thus, 110 pounds raised vertically 5 feet in one second, is a horsepower; for, since one second $= \frac{1}{60}$ of a minute, $110 \times 5 \div \frac{1}{60} = 33{,}000$ foot-pounds in one minute. The abbreviation for horsepower is H. P.

EXAMPLE.—If the coefficient of friction is .3, how many horsepower will it require to draw a load of 10,000 pounds on a level surface a distance of one mile in one hour?

SOLUTION.—$10{,}000 \times .3 = 3{,}000$ pounds = the force necessary to overcome the resistance (resistance of the air is neglected). One mile = 5,280 feet; one hour = 60 minutes.

$$\text{Power} = \frac{FS}{T} = \frac{3{,}000 \times 5{,}280}{60} = 264{,}000 \text{ foot-pounds per minute.}$$

$$\text{Horsepower} = \frac{264{,}000}{33{,}000} = 8 \text{ H.P.} \quad \text{Ans.}$$

956. **Energy** is a term used to express *the ability of an agent to do work.* Work cannot be done without motion, and the work that a moving body is capable of doing in being brought to rest is called the **kinetic energy** of the body.

Kinetic energy means the actual energy of a body in motion. The work which a moving body is capable of doing in being brought to rest is exactly the same as the kinetic

energy developed by it when falling in a vacuum through a height sufficient to give it the same velocity.

Let W = the weight of the body in pounds;

v = its velocity in feet per second;

h = the height in feet through which the body must fall to produce the velocity v;

m = the mass of the body $= \frac{W}{g}$. (See formula **10**, Art. **888.**)

957. The work necessary to raise a body through a height h is Wh. The velocity produced in falling through a height h is $v = \sqrt{2gh}$, and $h = \frac{v^2}{2g}$. (See formulas **15** and **16**, Art. **896.**)

Therefore, work $= Wh = W\frac{v^2}{2g} = \frac{1}{2} \times \frac{W}{g} \times v^2 = \frac{1}{2}mv^2$, or

$$Wh = \tfrac{1}{2}mv^2. \qquad (25.)$$

In other words, if the weight of the body and its velocity are given, the work necessary to bring it to rest is equal to one-half the product of the mass and the square of the velocity in feet per second. This is the kinetic energy of a moving body.

If a body, whose weight is 64.32 pounds, is moving with a velocity of 20 feet per second, the kinetic energy is $\frac{1}{2}mv^2 = \frac{W}{2g} \times v^2 = \frac{64.32}{2 \times 32.16} \times 20^2 = 400$ foot-pounds.

958. The height through which a body would have to fall in a vacuum to gain a velocity of 20 feet per second is $h = \frac{v^2}{2g} = \frac{400}{2 \times 32.16} = \frac{400}{64.32}$; the work done in raising a body through this height is $Wh = 64.32 \times \frac{400}{64.32} = 400$ foot-pounds, the same result as before. The distinction between kinetic energy and work, then, is this: *A body moving with a certain velocity, and meeting with no resistance, is not doing any work*, but has a certain amount of kinetic energy stored up in it, which depends upon the velocity and mass of the body.

If a resistance be interposed just sufficient to stop the body, the body will then do an amount of *work* equal to its kinetic energy.

EXAMPLE.—If a body weighing 25 pounds falls from a height of 100 feet, how much work can be done?

SOLUTION.—Work $= Wh = 25 \times 100 = 2{,}500$ foot-pounds. Ans.

EXAMPLE.—A body weighing 50 pounds has a velocity of 100 feet per second; what is its kinetic energy?

SOLUTION.—Kinetic energy $= \frac{1}{2} m v^2 = \frac{W v^2}{2 g} = \frac{50 \times 100^2}{2 \times 32.16} = 7{,}773.63$ foot-pounds. Ans.

EXAMPLE.—In the last example, how many horsepower would be required to give the body this amount of kinetic energy in 3 seconds?

SOLUTION.—1 H.P. $= 33{,}000$ pounds raised one foot in one minute. If 7,773.63 foot-pounds of work are done in 3 seconds, in one second there would be done $\frac{7{,}773.63}{3} = 2{,}591.21$ foot-pounds of work, and in one minute, $2{,}591.21 \times 60 = 155{,}472.6$ foot-pounds.

The number of horsepower developed would be

$$\text{H.P.} = \frac{155{,}472.6}{33{,}000} = 4.7113 \text{ H.P.} \quad \text{Ans.}$$

959. ***Potential energy*** *is latent energy; it is the energy which a body at rest is capable of giving out under certain conditions.*

If a stone be suspended by a string from a high tower, it has potential energy due to its position. If the string be cut, the stone will fall to the ground, and during its fall its potential energy will change into kinetic energy, so that, at the instant it strikes the ground, its potential energy is wholly changed into kinetic energy.

At a point equal to one-half the height of the fall, the potential and kinetic energies were equal. At the end of the first quarter, the potential energy was $\frac{3}{4}$, and the kinetic energy $\frac{1}{4}$; at the end of the third quarter, the potential energy was $\frac{1}{4}$, and the kinetic energy $\frac{3}{4}$.

A pound of coal has a certain amount of potential energy. When the coal is burned, the potential energy is liberated, and changed into kinetic energy in the form of heat. The kinetic energy of the heat changes water into steam, which

thus has a certain amount of potential energy. The steam acting on the piston of an engine causes it to move through a certain space, thus overcoming a resistance, changing the potential energy of the steam into kinetic energy, and thus doing work.

Potential energy, *then, is the energy stored within a body, which may be liberated and produce motion, thus generating kinetic energy, and enabling work to be done.*

960. The principle of **conservation of energy** teaches that energy, like matter, can never be destroyed. If a clock is put in motion, the potential energy of the spring is changed into the kinetic energy of motion, which turns the wheels, thus producing friction. The friction produces heat, which dissipates into the surrounding air, but still the energy is not destroyed—it merely exists in another form. The potential energy in coal was received from the sun, in the form of heat, ages ago, and has laid dormant for millions of years.

FORCE OF A BLOW.

961. The *average* **force of a blow** may be determined as follows:

In driving a nail into a piece of wood with a hammer, the head of the hammer must be capable of exerting, in a very short time, a force equal to that of a load sufficiently heavy to produce by its weight a movement of the nail into the wood, equal to the movement of the nail produced by the hammer; in other words, *the striking force, multiplied by the distance that the nail is driven into the wood, must equal the kinetic energy of the hammer.*

Suppose that the velocity of the hammer, as it strikes the nail, is 30 feet per second, that the weight of the head is 2 pounds, and that the nail is driven into the wood $\frac{1}{4}$ of an inch. Let the resistance offered by the wood, which is the same as the striking force of the hammer, be represented by F; then, since $\frac{1}{4}$ inch $= \frac{1}{48}$ of a foot,

$$F \times \tfrac{1}{48} = \tfrac{1}{2} m \times v^2 = \frac{2}{2 \times 32.16} \times 30^2 = 28, \text{ nearly.}$$

Therefore, $F = 28 \times 48 = 1{,}344$ pounds.

Had the penetration been $\frac{1}{8}$ of an inch, instead of $\frac{1}{4}$ of an inch, the value of F would have been twice as large, or 2,688 pounds. This is as it should be, since the work done is the same in both cases, while the distance through which the force acts is only half as great in the second case as in the first case. Hence, in order that the work may be the same, the force must be doubled.

EXAMPLE.—If the head of a drop-hammer, weighing 400 pounds, falls from a height of 10 feet, and compresses a piece of cold iron .01 of an inch, what was the striking force of the hammer?

SOLUTION.—.01 of an inch $= \frac{.01}{12}$ of a foot.

$$F \times \tfrac{.01}{12} = Wh = 400 \times 10 = 4{,}000.$$

Hence, $$F = \frac{4{,}000 \times 12}{.01} = 4{,}800{,}000 \text{ lb.} \quad \text{Ans.}$$

DENSITY AND SPECIFIC GRAVITY.

962. The **density of a body** is its mass divided by its volume in cubic feet.*

Let D be the density; then, the density of a body is,

$$D = \frac{m}{V}. \quad \text{Since } m = \frac{W}{g},\ D = \frac{W}{gV}. \qquad \textbf{(26.)}$$

EXAMPLE.—Three cubic feet of cast iron weigh 1,350 pounds; what is the density of cast iron?

SOLUTION.—$$D = \frac{W}{gV} = \frac{1{,}350}{32.16 \times 3} = 13.992.$$

EXAMPLE.—A cubic foot of water weighs 62.42 pounds; (*a*) what is its density? (*b*) What is the ratio between the density of cast iron and the density of water?

SOLUTION.—(*a*) $$D = \frac{W}{gV} = \frac{62.42}{32.16 \times 1} = 1.941 = \text{density.} \quad \text{Ans.}$$

(*b*) $$\frac{13.992}{1.941} = 7.21 = \text{ratio.} \quad \text{Ans.}$$

963. The **specific gravity of a body** *is the ratio between its weight and the weight of a like volume of water.*

*NOTE.—Some writers define density as the weight of a unit of volume of the material. When English measures are used, the density of any material, according to this definition, is the weight of a cubic foot of the material in pounds.

964. Since gases are so much lighter than water, it is usual to take the specific gravity of a gas as the ratio between the weight of a certain volume of the gas and the weight of the same volume of air.

EXAMPLE.—A cubic foot of cast iron weighs 450 pounds; what is its specific gravity, a cubic foot of water weighing 62.42 pounds?

SOLUTION.—According to the definition,

$$\frac{450}{62.42} = 7.21. \quad \text{Ans.}$$

NOTE.—Notice that this answer is the same as that of the preceding example; hence, the specific gravity of a body is also the *ratio of the density of a body to the density of water.*

965. The specific gravities of different bodies are given in printed tables; hence, if it is desired to know the weight of a body that cannot be conveniently weighed, *calculate its cubical contents, and multiply the specific gravity of the body by the weight of a like volume of water, remembering that a cubic foot of water weighs 62.42 pounds.*

EXAMPLE.—How much will 3,214 cubic inches of cast iron weigh? Take its specific gravity as 7.21.

SOLUTION.—Since 1 cubic foot of water weighs 62.42 pounds, 3,214 cubic inches weigh

$$\frac{3,214}{1,728} \times 62.42 = 116.098 \text{ pounds.}$$

Then, $116.098 \times 7.21 = 837.067$ pounds. Ans.

EXAMPLE.—What is the weight of a cubic inch of cast iron?

SOLUTION.—$\frac{62.42}{1,728} \times 7.21 = .26044$ pound. Ans.

One cubic foot of pure distilled water at a temperature of 39.2° Fahrenheit weighs 62.425 pounds, but *the value usually taken in making calculations is 62.5 pounds.*

EXAMPLE.—What is the weight in pounds of 7 cubic feet of oxygen?

SOLUTION.—One cubic foot of air weighs .08073 pound, and the specific gravity of oxygen is 1.1056, compared with air; hence,

$$.08073 \times 1.1056 \times 7 = .62479 \text{ pound, nearly.} \quad \text{Ans.}$$

EXAMPLES FOR PRACTICE.

1. A man jumps from a railroad train traveling at the rate of 60 miles per hour; if he weighs 160 lb., what is the kinetic energy of his body? Ans. 19,263.68 ft.-lb.

2. A hammer strikes a nail with a velocity of 40 ft. per sec.; if the head weighs $1\frac{1}{2}$ lb., and the nail is driven $\frac{5}{16}$ in., what is the force of the blow? Ans. 1,433 lb., nearly.

3. A load of 20,000 lb. is pulled up an inclined plane $1\frac{1}{2}$ miles long in 5 minutes; if the height of the plane is 800 ft., and the force acting along the plane necessary to overcome friction is 3% of the load, what is the horsepower required? Ans. 125.77 H. P.

4. If a cubic foot of a certain substance weighs $162\frac{1}{2}$ lb., what is its specific gravity? Ans. 2.6.

5. A mixture of lead and tin has a specific gravity of 9.28; what is the weight of a cubic inch? Ans. 5.37 oz.

6. A weight of 11,625 lb. is raised vertically 10 ft. in 3 minutes, by means of a block and tackle and a windlass; the frictional resistances being 26%, how many horsepower were required? Ans. 1.48 H. P.

7. A body weighing 24,062.5 lb. is drawn on a horizontal surface at the rate of 600 ft. per min.; the coefficient of friction being 8%, what horsepower will be necessary to overcome the resistance of friction? Ans. 35 H. P.

8. A solid cast iron sphere, 12″ in diameter, falls through a height of 50 ft.; what will be its kinetic energy on striking? Ans. 11,781 ft.-lb.

966. The table of specific gravities gives the specific gravities of a variety of substances likely to be met with in ordinary practice. The weights per cubic foot are calculated on a basis of 62.5 pounds of water per cubic foot.

STRENGTH OF MATERIALS.

MATERIALS USED FOR CONSTRUCTION.

1331. The principal materials used in engineering construction are *timber*, *brick*, *stone*, *cast iron*, *wrought iron*, and *steel*. Table 23 gives their average weights per cubic foot.

TABLE 23.

Material.	Average Weight. Pounds per Cubic Foot.	Approximate Weight of Piece 1″ Square and 1′ Long in Lb.
Timber	40	.278
Brick	125	
Stone	160	
Cast Iron	450	3.125
Wrought Iron	480	$3.333\frac{1}{3}$
Steel	490	3.403

CAST IRON.

1332. **Cast iron** is a combination of pure iron with from 2% to 6% of carbon.

Pig iron is the result of the first smelting, and is obtained directly from the ore. Pig iron is rarely, if ever, used for anything except to be remelted and made into cast iron or wrought iron.

1333. Cast iron is of two kinds, *white cast iron* and *gray cast iron*. The first is a chemical compound of iron with from 2% to 6% of carbon, nearly all the carbon being chemically combined with the iron. The second, or gray cast iron, contains a part of the carbon in chemical combination, and the rest in the state of graphite mechanically mixed with the iron. When a piece of gray cast iron is

For notice of the copyright, see page immediately following the title page.

broken, a large number of black specks are seen on the broken ends; these specks are pure carbon in the form of graphite.

1334. White cast iron contains hardly any free carbon. It is of two kinds, granular and crystalline. Both are very hard and brittle, and are only used for conversion into wrought iron or steel.

1335. Gray cast iron is divided into three classes, known as Nos. 1, 2, and 3.

No. 1 contains the largest amount of carbon in mechanical mixture, which makes it soft and fusible, though not as strong as Nos. 2 and 3. It is very suitable for making castings where precision in form is required, as, owing to its fluidity, it fills the mold well; but it is not suitable for castings requiring strength.

No. 2 is most suitable for use in constructions, as it is stronger than No. 1, and not so soft.

No. 3 contains the smallest amount of carbon in the graphitic (uncombined) form, and is, in consequence, harder and more brittle. It is fit only for the massive and heavy parts of machinery.

1336. Cast iron has certain advantages and disadvantages as a material for engineering construction. It is easy to give it any desired form. A pattern of the piece desired is made; a mold is made in the sand, the pattern is removed, and the melted iron poured in. Cast iron resists oxidation (rust) better than either wrought iron or steel. Its compressive (crushing) strength is very high, but its tensile (stretching) strength is comparatively low. It cannot be riveted, or welded by forging. It is brittle, breaking off without giving much warning, and stretching but little before giving away. It is liable to have hidden and small surface defects and air bubbles, and this makes its strength uncertain.

Another serious drawback in the use of cast iron is its liability to initial stresses from inequality in cooling after having been poured into the molds. Thus, if one part of

the casting is very thin and another very thick, the thin part cools first, and, in cooling, contracts; the thick part, cooling afterwards, causes stresses in the thin part, which may be sufficient to break it, or, if not, there may be so great a stress in the thin part that a small additional force will break it.

Cast iron is not well adapted to a tensile stress, nor to resist shocks. It is used for columns and posts in buildings, on account of its high compressive strength. In machinery, it is used in all those parts where weight, mass, or form is of more importance than strength, as in frames and bed plates of machines, and for hangers, pulleys, gear wheels, etc. It is also used for water mains where the pressure to be resisted is not too great.

1337. Malleable cast iron is made by heating the casting in an annealing oven, in powdered hematite ore. It can be hammered into any desired shape when cold, but is very brittle when hot.

WROUGHT IRON.

1338. Wrought iron is the product resulting from the reduction of the carbon in cast iron. It is obtained by melting white cast iron, and passing an oxidizing flame over it. When the carbon is burned out, the mass of iron is left in a pasty condition, full of holes. It is then taken out, and hammered or rolled in order to unite it into one mass. The result of this first process is not suitable for use in any construction of importance, and has to be reheated and rerolled a number of times, in order to make it homogeneous, and to remove flaws from within the iron.

At best, therefore, wrought iron is a series of welds; if a piece is broken, the separate layers of which it is composed can be seen plainly. It cannot be melted and run into molds, as can be done with cast iron; but it can be easily welded by forging; that is, two pieces of wrought iron can be united by raising them to the proper temperature and hammering them together. Wrought iron is much more capable of bearing a tensile or transverse stress than cast

iron; it is tougher, stretches more, and gives more warning before fracture.

It withstands shocks far better than cast iron. Two pieces may be punched or drilled and riveted together. The entire process weakens the iron, and cast iron would not withstand it. It has also to withstand flanging and the stresses due to changes of temperature.

Wrought iron cannot be hardened like steel by heating and then dipping in water, but may be *case-hardened* by rubbing the surface with potassium cyanide or potassium ferrocyanide while at a cherry-red heat and then dipping in water. The cyanide causes the iron to be carbonized to a slight depth; that is, through a depth of about $\frac{1}{32}$ of an inch the iron is converted into steel which can be hardened. Cast iron may be hardened in the same way.

The quality of wrought iron varies considerably, and the terms by which it is known in the market refer to the amount of working which the iron has received. We thus have common bar iron, best iron, double best, and triple best. These terms are only rough indications of quality. When wrought iron is rolled cold under great pressure, it has a smooth polished surface, and its strength is greatly increased.

When the word iron is used alone, wrought iron is meant.

STEEL.

1339. Steel is a chemical compound of iron and carbon; that is, it contains no carbon in a free state, as cast iron does. Its tensile strength is greater than that of wrought iron, and its compressive strength greater than that of cast iron. It is by far the strongest material used in the mechanic arts. Its strength varies greatly with its purity and the amount of carbon it contains. According to the amount of carbon in it, steel is divided into high grade, medium grade, and low grade, the high grades having the most carbon. Steel, unlike wrought iron, is fusible; unlike cast iron, it can be forged; and, with the exception of the higher grades,

it can be welded by heating and hammering, although care must be exercised in so doing.

1340. The special characteristic of steel (the very lowest grades excepted) is that, when it is raised to a cherry red heat and suddenly cooled, it becomes brittle and exceedingly hard, and that by subsequent heating and slow cooling, the hardness may be reduced to any desired degree down to the point of least hardness that steel possessing that amount of carbon can have. The first process is called *hardening*, and the second *tempering*.

If the surface of a piece of steel that has been hardened is polished slightly so as to remove the dark scale or soot which covers it, and is then reheated, it will be found that, as the temperature increases, a series of colors appear. These colors are always the same for the same temperature, and, if the steel is suddenly cooled when one of the colors appears, it acquires a degree of hardness which is always the same for the same color and for the same quality of steel.

In Table 24 are given the colors with the corresponding temperatures that occur in tempering different kinds of tools.

TABLE 24.

Tools.	Color.	Temperature, Fahr.
Lancets	Pale yellow	430°
Razors and scalpels	Pale straw	450°
Penknives, chisels for cast iron, and screw taps	Yellow	470°
Scissors and chisels for wrought iron	Brown	490°
For carpenters' tools in general	Red	510°
Fine watch springs and table knives	Purple	530°
Swords and lock springs	Blue, bright	550°
Daggers, fine saws and needles	Blue, full	560°
Common saws and springs	Blue, dark	600°

Steel that has been hardened may be softened by heating it to a hardening temperature and then cooling it very slowly; this process is called **annealing.**

1341. Steel is made in one of the three following ways:

1. By adding carbon to wrought iron.
2. By removing carbon from cast iron.
3. By melting together cast and wrought iron in suitable proportions.

Several processes, varying with the quality of the product desired and the use for which it is intended, are used in making steel. The processes in general use are the following:

(*a*) **Cementation,** in which bars of very pure wrought iron are heated to a high temperature in contact with carbon. The product, known as **blister steel,** is used for cutlery, tools, etc.

(*b*) **Crucible steel,** also called **cast steel,** is made by melting pure wrought iron in a crucible with enough charcoal and cast iron to introduce the required amount of carbon. It is used for making springs, cutlery, tools, etc.

(*c*) **Bessemer steel** is made by decarbonizing cast iron by forcing a powerful blast of air through a melted mass of the iron. This removes the greater part of its carbon. A small quantity of very pure cast iron, rich in carbon, is then added, bringing up the percentage of carbon to the required amount.

(*d*) **Open-hearth steel** is made by fusing a charge consisting of the suitable proportions of cast iron with wrought iron scrap, or with Bessemer steel scrap.

1342. Bessemer and open-hearth steel contain more impurities than blister and crucible steel do; but they are much cheaper, and are just as suitable for many purposes. It is only in consequence of the introduction of these two cheap varieties that steel can be extensively used, as blister and crucible steels would, in the majority of cases, be too expensive.

Bessemer and open-hearth steels contain from .05% to 1½% of carbon. The proportion of carbon in the best kinds of tool and cutlery steels is as follows:

Razor steel,	1½%.	Very difficult to forge, and easily burnt.
Saw file,	1⅜%.	Bears heat not above cherry redness.
Tool steel,	1¼%.	Ordinary cutting tools. Welds with difficulty.
" "	1⅛%.	For mandrils and heavy cutting tools.
" "	1%.	For chisels, gravers, etc.

At the Imperial Works at Neuberg, Austria, the following percentages of carbon are present in the different grades of Bessemer steel:

1.58% to 1.38%.	Cannot be welded, and is rarely used.
1.38% " 1.12%.	Great care must be used in working.
1.12% " .88%.	Welds easily; used for bits, chisels, etc.
.88% " .62%.	Used for cutting tools, files, etc.
.62% " .38%.	Mild steel; for tires, etc.
.38% " .15%.	Tempers slightly; for boiler plates and axles.
.15% " .05%.	Does not temper; steel for pieces of machinery.

1343. It will be noticed from what precedes that the hardness of steel depends upon the amount of carbon it contains.

Some kinds of crucible cast steel can be hardened by heating to a low red heat and then allowing them to cool slowly in the air without dipping in water. They are called self-hardening steels, the best known being Mushet's special tool steel. This contains about 2% carbon with 7% to 12% tungsten in alloy with the iron. The same property is characteristic of Hadfield's manganese steel, which contains between .8% and 1.2% of carbon and 7% to 20% of manganese.

As a rule, when a piece of steel is broken across the grain, the finer the grain and the whiter and cleaner the fracture the more carbon it contains.

STRESSES AND STRAINS.

1344. The molecules of a solid or rigid body being held together by the force of cohesion, this force must be overcome to a greater or less degree in order to change the form and size of the body, or to break it into parts. The internal resistance which a body offers to any force tending to overcome the force of cohesion is called a **stress.** If a weight of 1,000 pounds is held in suspension by a rod, there will be a stress of 1,000 pounds in the rod. In this country and England, stresses are measured in pounds or tons; in nearly all other civilized countries, in kilograms. Whenever a body is subjected to a stress, the total stress induced by the acting force at any section of the body is the same as the total stress at any other section.

1345. The **unit stress** (called also the **intensity** of stress) is the stress per unit of area; or, it is the total stress divided by the area of the cross-section. In the above illustration, if the area had been 4 sq. in. the unit stress would have been $\frac{1,000}{4} = 250$ lb. per sq. in. Had the area been $\frac{1}{2}$ sq. in., the unit stress would have been $\frac{1,000}{.5} = 2,000$ lb. per sq. in.

Let $P =$ the total stress in pounds;

$A =$ area of cross-section in square inches;

$S =$ unit stress in pounds per square inch.

Then, $$S = \frac{P}{A}, \text{ or } P = A\,S. \qquad \textbf{(108.)}$$

That is, *the total stress equals the area of the section, multiplied by the unit stress.*

When a body is stretched, shortened, or in any way deformed through the action of a force, the amount of deformation is called a **strain.** Thus, if the rod before mentioned had been elongated $\frac{1}{10}''$ by the load of 1,000 pounds, the strain would have been $\frac{1}{10}''$. Within certain limits, to be given hereafter, strains are proportional to the stresses producing them.

1346. The **unit strain** is the strain per unit of length or of area, but is usually taken per unit of length and called the *elongation* per unit of length. In this paper, the unit of length will be considered as one inch. The unit strain, then, equals the total strain divided by the length of the body in inches.

Let l = length of body in inches;
e = elongation in inches;
s = unit strain.

Then, $$s = \frac{e}{l}, \text{ or } e = ls. \qquad \textbf{(109.)}$$

1347. Whenever a force, no matter how small, acts upon a body, it produces a stress and a corresponding strain.

According to the manner in which forces act upon a body, the stresses are divided into the following classes:

1. *Tension*, which produces a tensile or pulling stress.
2. *Compression*, which produces a compressive or crushing stress.
3. *Shear*, which produces a shearing or cutting stress.
4. *Torsion*, which produces a torsional or twisting stress.
5. *Flexure*, which produces a transverse or bending stress.

TENSION.

1348. When two forces act upon a body in opposite directions (away from each other) the body is said to be in tension. The two forces tend to elongate the body and thus produce a tensile stress and strain. A weight supported by a rope affords a good example. The weight acts downwards, and the reaction of the support to which the upper end of the rope is fastened acts upwards; the result being that the rope is stretched more or less, and a tensile stress is produced in it. Another familiar example is the connecting rod of a steam engine on the return stroke. The cross-head then exerts a pull on one end of the rod, which is resisted by the crank-pin on the other.

EXAMPLE.—An iron rod, 2 inches in diameter, sustains a load of 90,000 pounds; what is the unit stress?

SOLUTION.—Using formula **108**,

$$P = A\,S, \text{ or } S = \frac{P}{A} = \frac{90{,}000}{2^2 \times .7854} = 28{,}647.82 \text{ lb. per sq. in.} \quad \text{Ans.}$$

EXPERIMENTAL LAWS.

1349. The following laws have been established by experiment:

1. *When a body is subjected to a small stress, a small strain is produced, and when the stress is removed the body springs back to its original shape. This leads to the conclusion that, for small stresses, bodies are perfectly elastic.*

2. *Within certain limits, the change of shape (strain) is directly proportional to the applied force.*

3. *When the stress is sufficiently great, a strain is produced which is partly permanent; that is, the body does not spring back entirely to its original form when the stress is removed. This lasting part of the strain is called a* **set,** *and in such cases the strain is not proportional to the stress.*

4. *Under a still greater stress, the strain rapidly increases, and the body is finally ruptured or broken.*

5. *A force acting suddenly, as a shock, causes greater injury than a force gradually applied.*

According to the first law, the body will resume its original form when the force is removed, provided the stress is not too great. This property is called *elasticity*. According to the second law, the strain is proportional to the stress within certain limits. Thus, if a pull of 1,000 pounds elongates a body .1″, a pull of 2,000 pounds would elongate it .2″. This is true up to a certain limit, beyond which the body will not resume its original form upon the removal of the stress, but will be permanently strained more or less, according to the amount of stress. The stress at the point where the set begins is called the **elastic limit.** All strains produced by stresses within (less than) the elastic limit are directly proportional to the stresses.

1350. Stresses are equal but opposed to the external forces producing them, and are, therefore, measured and represented by these forces. Thus, as we have explained before, a force of 1,000 pounds produces a stress of 1,000 pounds. The external force is the force applied to a fixed body; the stress is the resistance offered by the body to a change of form; and when the body ceases to change (as when a rod ceases to elongate), the stress just balances the external force.

COEFFICIENT OF ELASTICITY.

1351. Amongst engineers, the term *elasticity* means the *resistance* which a body offers to a permanent change of form; and by *strength*, the resistance which a body offers to division or separation into parts.

It follows from this that those bodies which have the highest elastic limit are the most elastic.

1352. The **coefficient of elasticity** is the ratio of the unit stress to the unit strain, provided the elastic limit is not exceeded. Let S be the unit stress, s the unit strain, and E the coefficient of elasticity; then, by definition, $E = \frac{S}{s}$. Substituting the values of S and s obtained from formulas **108** and **109**,

$$E = \frac{S}{s} = \frac{P}{A} \div \frac{e}{l} = \frac{Pl}{Ae}. \qquad \textbf{(110.)}$$

1353. If in this formula we assume $e = l$, and $A = 1$ (1 square inch), then $E = P$. That is, the coefficient of elasticity is that force which, *if stress and strain continued proportional to each other*, would produce in a bar of unit area a strain equal to the original length of the bar ($l = e$). This, however, is never the case, as the elastic limit and the ultimate strength are reached before the applied force reaches the value E.

EXAMPLE.—A wrought iron bar 2 inches square and 10 feet long is stretched .0528 inch by a stress of 44,000 pounds; what is the coefficient of elasticity?

SOLUTION.—Using formula **110**,

$$E = \frac{Pl}{Ae} = \frac{44{,}000 \times 10 \times 12}{2^2 \times .0528} = 25{,}000{,}000 \text{ lb. per sq. in.} \quad \text{Ans.}$$

1354. The **ultimate strength** of any material is that unit stress which is just sufficient to break it.

1355. The **ultimate elongation** is the total elongation produced in a unit of length of the material having a unit of area, by a stress equal to the ultimate strength of the material.

1356. For the same size, quality, and kind of material, the ultimate strength, ultimate elongation, coefficient of elasticity, and elastic limit are the same for different pieces. Table 25 gives the *average* values of the coefficient of elasticity (E_1), elastic limit (L_1), ultimate strength (S_1), and

TABLE 25.

Material.	Coefficient of Elasticity. E_1.	Elastic Limit. L_1.	Ultimate Tensile Strength. S_1.	Ultimate Elongation. s_1.
	Lb. per Sq. In.	Lb. per Sq. In.	Lb. per Sq. In.	In. per Linear Inch.
Timber	1,500,000	3,000	10,000	0.015
Cast Iron	15,000,000	6,000	20,000	0.005
Wrought Iron	25,000,000	25,000	55,000	0.20
Steel	30,000,000	50,000	100,000	0.10

ultimate elongation (s_1), of different materials, the quantities given being for *tension* only. As brick and stone are never used in tension, their values are not given.

The values in this table are subject to great variation, and cannot be depended upon in designing machine parts. Thus, the ultimate tensile strength of steel varies from less than 60,000 to more than 180,000 pounds per square inch, according to its purity and the amount of carbon it contains; that of cast iron from 12,000, or 13,000, to over 40,000; wrought iron varies from 40,000 to 72,000, according to quality, the latter value being for iron wire. Timber varies fully as much as, if not more than, any of the three preceding materials, its properties depending upon the kind of wood, its degree of dryness, the manner of drying, etc.

All the problems in this section will be solved by using the average values given in the preceding and following tables; the designer, however, should not use them, but either test the materials himself or state in the specifications what strength the material must have. For example, mild steel, for boiler shells, should have a tensile strength of not less than 60,000 or 65,000 pounds per square inch; Bessemer steel, for steel rails, not less than 110,000; open-hearth steel, for locomotive tires, not less than 125,000, and crucible cast steel, for tools, cutlery, etc., not less than 150,000. It is also customary to specify the amount of elongation. This is necessary because, as a rule, the elongation decreases as the tensile strength increases. Having tested the material about to be used, or having specified the lowest limits, the designer can ascertain the strength and stiffness of construction by means of the formulas and rules which are to follow.

EXAMPLE.—How much will a piece of steel 1 inch in diameter and 1 foot long elongate under a steady load of 15,000 pounds?

SOLUTION.—$E_1 = \frac{P\,l}{A\,e}$, or $e = \frac{P\,l}{A\,E_1}$.

From Table 25, $E_1 = 30{,}000{,}000$ for steel; hence,

$$e = \frac{15{,}000 \times 12}{1^2 \times .7854 \times 30{,}000{,}000} = .00764''. \quad \text{Ans.}$$

NOTE.—All lengths given in this treatise on Strength of Materials must be reduced to inches before substituting in the formulas.

EXAMPLE.—A piece of timber has a cross-section $2'' \times 4''$ and is 6 feet long. A certain stress produces an elongation of .144 inch; what is the value of the stress in pounds?

SOLUTION.—

$$E_1 = \frac{P\,l}{A\,e}, \text{ or } P = \frac{E_1\,A\,e}{l} = \frac{1{,}500{,}000 \times 2 \times 4 \times .144}{6 \times 12} = 24{,}000 \text{ lb.} \quad \text{Ans.}$$

COMPRESSION.

1357. If the length of the piece is not more than five times its least transverse dimension (its diameter, when round; its shorter side, when rectangular, etc.), the laws of compression are similar to those of tension. The strain is proportional to the stress until the elastic limit has been

reached; after that, it increases more rapidly than the stress, as in the case of tension. The area of the cross-section is slightly enlarged under compression. In Table 26 are given the average compression values of E, L, and S for wood, brick, stone, cast iron, wrought iron, and steel. (See also Table 25.) E is not given for brick, nor L for cast iron, brick, or stone, because these values are not known. To distinguish between tension and compression when applying a formula, E_2, L_2, and S_2 will be used instead of E_1, L_1, and S_1.

TABLE 26.

Material.	Coefficient of Elasticity. E_2.	Elastic Limit. L_2.	Ultimate Compressive Strength. S_2.
	Lb. per Sq. In.	Lb. per Sq. In.	Lb. per Sq. In.
Timber.....	1,500,000	3,000	8,000
Brick	.....	.....	2,500
Stone.....	6,000,000	.....	6,000
Cast Iron.....	15,000,000	.....	90,000
Wrought Iron.....	25,000,000	25,000	55,000
Steel.....	30,000,000	50,000	150,000

1358. When the length of a piece subjected to compression is greater than ten times its least transverse dimension, it is called a *column*, and the material fails by a sidewise bending or flexure. The preceding table is to be used only for pieces whose length does not exceed *five* times the least dimension of the cross-section. (See Art. **1421***a*.)

EXAMPLE.—How much will a wrought iron bar 4 inches square and 15 inches long shorten under a load of 100,000 pounds?

SOLUTION.—$E_2 = \frac{P\,l}{A\,e}$, or $e = \frac{P\,l}{A\,E_2}$.

Hence, $e = \frac{100{,}000 \times 15}{16 \times 25{,}000{,}000} = .00375''$. Ans.

SHEAR.

1359. When two surfaces move in opposite directions very near together in such a manner as to cut a piece of material, or to pull part of a piece through the remainder, the piece is said to be *sheared.* A good example of a shearing stress is a punch; the two surfaces in this case are the bottom of the punch and the top of the die. Another example is a bolt with a thin head; if the pull on the bolt is great enough, it will be pulled through the head and leave a hole in it, instead of the bolt breaking by pulling apart, as would be the case with a thick head. In this case, the two surfaces are the under side of the head and the surface pressed against. Other examples are a knife cutting a piece of wood, and the ordinary shears from which this kind of stress takes its name.

TABLE 27.

Material.	Coefficient of Elasticity. E_s.	Ultimate Shearing Strength. S_s.
Timber (across the grain).....	.....	3,000
Timber (with the grain)	400,000	600
Cast Iron.....	6,000,000	20,000
Wrought Iron.....	15,000,000	50,000
Steel.....	.....	70,000

1360. Formula **108** applies in cases of shearing stress, but formulas **109** and **110** are never used for shearing. In the preceding table, E_s and S_s are used to represent, respectively, the coefficient of shearing elasticity, and ultimate shearing strength.

EXAMPLE.—What force is necessary to punch a one-inch hole in a wrought iron plate $\frac{3}{8}$ of an inch thick?

SOLUTION.—$1'' \times 3.1416 \times \frac{3}{8}'' = 1.1781$ sq. in. = area of punched surface = area of a cylinder 1″ in diameter and $\frac{3}{8}''$ high. Using formula **108**,

$$P = A\,S_s = 1.1781 \times 50{,}000 = 58{,}905 \text{ lb.} \quad \text{Ans.}$$

EXAMPLE.—A wooden rod 4 inches in diameter and 2 feet long is turned down to 2 inches diameter in the middle so as to leave the enlarged ends each 6 inches long. Will a steady stress pull the rod apart in the middle, or shear the ends?

SOLUTION.—$P = A\,S_s = 2 \times 3.1416 \times 6 \times 600 = 22{,}620$ lb. to shear off the ends.

The force required to rupture by tension is

$$P = A\,S_1 = 2^2 \times .7854 \times 10{,}000 = 31{,}416 \text{ lb.}$$

Since the former is only about $\frac{2}{3}$ of the latter, the piece will fail through the shearing off of the end. Ans.

Had a transverse stress been used, the force necessary to shear off a section of the end would have been

$$4^2 \times .7854 \times 3{,}000 = 37{,}700 \text{ lb.}$$

FACTORS OF SAFETY.

1361. It was previously stated that no stress should ever be applied to a machine part that would strain it beyond the elastic limit. The usual practice is to divide the ultimate strength of the material by some number depending upon the kind and quality of the material, and upon the nature of the stress; this number is called a **factor of safety.**

The factor of safety for any material is the ratio of its ultimate strength to the actual stress to which it is subjected, or for which it is intended.

In Table 27, 70,000 pounds per square inch is given as the ultimate shearing strength for steel. Now, suppose that the actual stress on a piece of steel is 10,000 pounds per square inch; then, the factor of safety for this piece would be $\frac{70{,}000}{10{,}000} = 7$.

1362. To find the proper allowable working strength of a material, divide the ultimate strength for tension, compression, or shearing, as the case may be, by the proper factor of safety.

Table 28 gives the factors of safety generally used in American practice. Factors of safety will always be denoted by the letter f in the formulas to follow.

TABLE 28.

Material.	For Steady Stress. (Buildings.)	For Varying Stress. (Bridges.)	For Shocks. (Machines.)
Timber.....	8	10	15
Brick and Stone...	15	25	30
Cast Iron.....	6	10	15
Wrought Iron.....	4	6	10
Steel.....	5	7	10

1363. *Twice as much strain is caused by a suddenly applied stress as by one that is gradually applied.* For this reason a larger safety factor is used for shocks than for steady stresses. In general, the factor of safety for a given material must be chosen according to the nature of the stress.

The designer usually chooses his own factors of safety. If the material has been tested, or the specifications call for a certain strength, then the factor of safety can be chosen accordingly.

EXAMPLE.—Assuming the mortar and brick to be of the same strength, how many tons could be safely laid upon a brick column 2 feet square and 8 feet high?

SOLUTION.—$P = A\ S_2 = 2 \times 2 \times 144 \times 2{,}500 = 1{,}440{,}000$ lb. $= 720$ tons. The factor of safety for this case is 15 (see Art. **1362** and Table **28**); hence, $720 \div 15 = 48$ tons. Ans.

EXAMPLE.—What must be the diameter of the journals of a wrought iron locomotive axle to resist shearing safely, the weight on the axle being 40,000 pounds?

SOLUTION.—Let f be the factor of safety; then, $P = \frac{A\ S_3}{f}$, or $A = \frac{Pf}{S_3}$. Since the axle has two journals, the stress on each journal is 20,000 lb. Owing to inequalities in the track, the load is not a steady one, but varies; for this reason, the factor of safety will be taken as 6. Then, $A = \frac{20{,}000 \times 6}{50{,}000} = 2.4$ sq. in. Therefore, $d = \sqrt{\frac{2.4}{.7854}} = 1\frac{3}{4}''$. Ans.

EXAMPLE.—Considering the piston rod of a steam engine as if its length were less than ten times its diameter, what must be the diameter of a steel rod, if the piston is 18 inches in diameter and the steam pressure is 110 pounds per square inch?

SOLUTION.—Area of piston is $18^2 \times .7854 = 254.47$ sq. in. $254.47 \times 110 = 27{,}991.7$ lb., or, say, 28,000 lb. = stress in the rod. $A = \frac{Pf}{S_2} = \frac{28{,}000 \times 10}{150{,}000}$ $= 1.87''$, nearly. Hence, diameter $= \sqrt{\frac{1.87}{.7854}} = 1.543''$, say $1\frac{9}{16}''$. Ans.

1364. When designing a machine, care should be taken (1) *to make every part strong enough to resist any stress likely to be applied to it; and* (2) *to make all parts of equal strength.*

The reason for the first statement is obvious, and the second should be equally clear, since no machine can be stronger than its weakest part (proportioned, of course, for the stress it is to bear), and those parts of the machine which are stronger than others contain an excess of material which is wasted. In actual practice, however, this second rule is frequently modified. Some machines are intended to be massive and rigid, and need an excess of material to make them so; in others, there are difficulties in casting that modify the rule, etc., etc. In most cases, the designer must rely on his own judgment.

EXAMPLES FOR PRACTICE.

1. A cast iron bar is subjected to a steady tensile stress of 120,000 pounds. The cross-section is an ellipse whose axes are 6 and 4 inches. (*a*) What is the stress per square inch? (*b*) What load will the bar carry with safety? Ans. (*a*) 6,366.18 lb. per sq. in. (*b*) 62,832 lb.

2. How much will a piece of steel 2 inches square and 10 inches long shorten under a load of 300,000 pounds? Ans. .025".

3. A cylindrical wooden pin $1\frac{3}{4}$ inches in diameter is subjected to a double shearing stress. If the stress is suddenly applied, what total force is necessary to shear the pin? Ans. 7,216 lb.

4. A wrought iron tie rod is $\frac{3}{4}$ inch diameter; how long must it be to lengthen $\frac{3}{8}$ inch under a steady pull of 5,000 pounds? Ans. 69 ft.

5. A steel bar having a cross-section of $5'' \times 4''$ and 14 feet long is lengthened .036 inch by a steady pull of 120,000 pounds; what is its coefficient of elasticity? Ans. 28,000,000 lb. per sq. in.

6. Which is the stronger, weight for weight, a bar of chestnut wood whose tensile strength is 12,000 pounds per square inch and specific gravity .61, or a bar of steel whose tensile strength is 125,000 pounds per square inch?

7. What should be the diameter of a cast-iron pin subjected to a suddenly applied double shearing stress of 40,000 pounds to withstand the shocks with safety? Ans. $4\frac{3}{8}''$, nearly.

8. What safe steady load may be placed upon a brick column 2 feet square and 9 feet high? Ans. 96,000 lb.

PIPES AND CYLINDERS.

1365. A pipe or cylinder subjected to a pressure of steam or water is strained equally in all its parts, and, when rupture occurs, it is in the direction of its length.

Let d = inside diameter of pipe in inches;

l = length of pipe in inches;

p = pressure in pounds per square inch;

P = total pressure.

Then, $P = p\,l\,d$.

This formula is derived from a principle of hydrostatics that the pressure of water in any direction is equal to the pressure on a plane perpendicular to that direction. In Fig. 317, suppose the direction of pressure to be as shown by the arrows; $A\ B$ would then be the plane perpendicular to this direction, the width of the plane being equal to the diameter, and the length equal to the length of the pipe. The area of the plane would then be $l \times d$, and the total pressure $P = p \times l \times d$, as above.

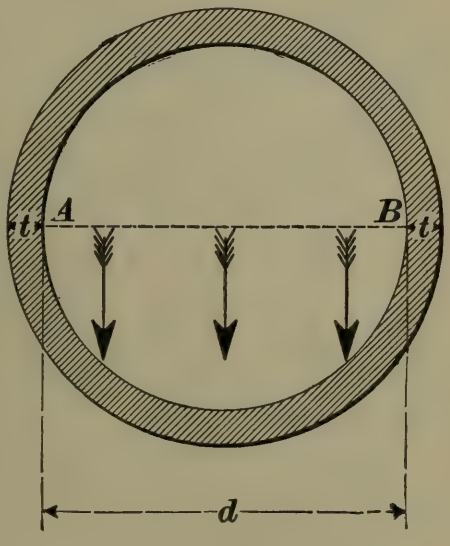

FIG. 317.

Suppose the pipe to have a thickness t, and let S be the working strength of the material; then, the resistance of the pipe on *each* side is $t\,l\,S$. Resistance must equal pressure; therefore, $p\,l\,d = 2\,t\,l\,S$, or

$$p\,d = 2\,t\,S. \qquad \textbf{(111.)}$$

Also, $p = \frac{2\,t\,S}{d}$, which is the maximum pressure a pipe of a given material and of given dimensions can stand.

The pressure of water per square inch may be found by the formula, $p = .434\ h$, where h is the head in feet. In pipes where shocks are likely to occur, the factor of safety should be high. The thickness of a pipe to resist a given pressure varies directly as its diameter, the pressure remaining constant.

EXAMPLE.—Find the factor of safety for a cast-iron water pipe 12 inches in diameter and $\frac{3}{4}$ inch thick, under a head of 350 feet.

SOLUTION.—Here p, pressure per square inch, equals $.434\ h = .434 \times 350 = 151.9$ lb. Substituting, in formula **111**, the values given,

$$151.9 \times 12 = 2 \times \tfrac{3}{4} \times S, \text{ or } S = 1{,}215.2 \text{ lb. per sq. in.}$$

In Table 25, Art. **1356**, the ultimate tensile strength of cast iron is given as 20,000 pounds per square inch; then, the factor of safety is $f = \frac{20{,}000}{1{,}215.2} = 16+$. Ans. The pipe would, therefore, be secure against shocks.

EXAMPLE.—Find the proper thickness for a wrought-iron steam pipe 18 inches in diameter to resist a pressure of 140 pounds per square inch.

SOLUTION.—Using a factor of safety of 10, the working strength $S = \frac{55{,}000}{10} = 5{,}500$ lb. per sq. in. From formula **111**, $t = \frac{p\,d}{2S} = \frac{140 \times 18}{2 \times 5{,}500} = 0.23$ in. In practice, however, the thickness is made somewhat greater than the formula requires.

CYLINDERS.

1366. The tendency of a cylinder subjected to internal pressure is to fail or rupture in the direction of its length, the same as a pipe.

Let π (pronounced *pi*) be the ratio of the circumference of a circle to its diameter $= 3.1416$; then, $\frac{1}{4}\,\pi = .7854 =$ ratio of area to the square of the diameter.

The total pressure on the cylinder head $= \frac{1}{4}\,\pi\,d^2\,p$. Let $S =$ working unit stress $= \frac{S_1}{f}$, then $\pi\,d\,t\,S =$ the resistance to rupture caused by the pressure acting on the opposite

cylinder heads and tending to elongate the cylinder. Since the resistance must equal the force, or pressure, $\frac{1}{4}\pi d^2 p = \pi d t S$, or

$$p d = 4 t S. \qquad \textbf{(112.)}$$

$$\text{Also, } p = \frac{4 t S}{d}.$$

Since, for longitudinal rupture, $p = \frac{2 t S}{d}$, it is seen that a cylinder is twice as strong against transverse rupture as against longitudinal rupture. Hence, other things being equal, the cylinder will always fail by longitudinal rupture.

1367. The foregoing formulas are for comparatively thin pipes and cylinders, in which the thickness is less than about $\frac{1}{10}$ inside radius. For pipes and cylinders whose thickness is greater than $\frac{1}{10}$ radius, use the following formula, in which $r =$ the inner radius, and the other letters have the same meaning as before.

$$p = \frac{S t}{r + t}. \qquad \textbf{(113.)}$$

Substituting the values given in the example in Art. **1365**, in formula **113**, instead of formula **111**,

$$p = \frac{S t}{r + t}, \text{ or } S = \frac{p (r + t)}{t} = \frac{151.9 \times (6 + \frac{3}{4})}{\frac{3}{4}} =$$

$$151.9 \times 6\tfrac{3}{4} \times \tfrac{4}{3} = 1{,}367.1 \text{ lb.}$$

When formula **111** was used, $S = 1{,}215.2$ lb.; hence, formula **113** gives, for this case, a value $12\frac{1}{2}\%$, or $\frac{1}{8}$ greater.

The formula for spheres is the same as that for transverse rupture of cylinders, or $p d = 4 t S$.

1368. A cylinder under external pressure is theoretically in a similar condition to one under internal pressure, so long as its cross-section remains a true circle. A uniform internal pressure tends to preserve the true circular form, but an external pressure tends to increase the slightest variation from the circle, and to render the cross-section elliptical. The distortion, when once begun, increases rapidly, and

failure occurs by the collapsing of the tube rather than by the crushing of the material. The flues of a steam boiler are the most common instances of cylinders subjected to external pressure.

The letters having the same meaning as before, the following formula gives the collapsing pressure in pounds per square inch for wrought-iron pipe:

$$p = 9{,}600{,}000\frac{t^{2.18}}{l\,d}. \qquad \textbf{(114.)}$$

EXAMPLE.—What must be the thickness of a boiler tube 2 inches in diameter and 11 feet long, if the steam pressure is to be not over 160 pounds per square inch?

SOLUTION.—Using formula **114**, with a factor of safety of 10, and solving for t,

$$t = \sqrt[2.18]{\frac{10\,p\,l\,d}{9{,}600{,}000}} = \sqrt[2.18]{\frac{10\times 160\times 11\times 12\times 2}{9{,}600{,}000}} = \sqrt[2.18]{\frac{11}{250}}.$$

Hence, $\log t = \dfrac{\log 11 - \log 250}{2.18} = \overline{1}.37773$, or $t = .2386''$, say $\frac{1}{4}''$.

EXAMPLES FOR PRACTICE.

1. What must be the thickness of a 16-inch cast-iron stand pipe which is subjected to a head of water of 250 feet? Assume that the stress is steady. Ans. .26″.

2. What should be the thickness of a wrought-iron boiler flue 15 feet long, 4 inches in diameter, and subjected to an external pressure of 200 pounds per square inch? Ans. .42″.

3. What pressure per square inch can be safely sustained by a cast-iron cylinder 12 inches in diameter and 3 inches thick? Ans. 1,111⅑ lb. per sq. in.

4. What external pressure per square inch can a wrought iron pipe 20 feet long, 3 inches in diameter, and ⅜ inch thick, safely sustain and be secure against shocks? Ans. 157.2 lb. per sq. in.

5. A cast-iron cylinder 14 inches in diameter sustains a total pressure of 125 tons; what is the necessary thickness, assuming that the pressure is gradually applied, and that the cylinder is not subjected to shocks? Ans. 6.65″.

6. A cylindrical boiler shell 3 feet in diameter is subjected to a steady hydrostatic pressure of 180 pounds per square inch. What should its thickness be if made of steel having a tensile strength of 60,000 pounds per square inch? Ans. .27″.

ELEMENTARY GRAPHICAL STATICS.

Before taking up the subject of flexure, some fundamental principles of Graphical Statics not heretofore considered will be explained and applied to the case of beams.

FORCE DIAGRAM AND EQUILIBRIUM POLYGON.

1369. In Arts. **878** and **879,** the polygon of forces was used to find the resultant of several forces having a common point of application, or whose lines of action passed through a common point. A method of finding the resultant will now be given when the forces lie, or may be considered as lying, in the same plane, but their lines of action do not pass through a common point.

In Fig. 318, let F_1, F_2, and F_3 be three forces whose magnitudes are represented by the lengths of their respective lines, and their directions by the positions of the lines and by

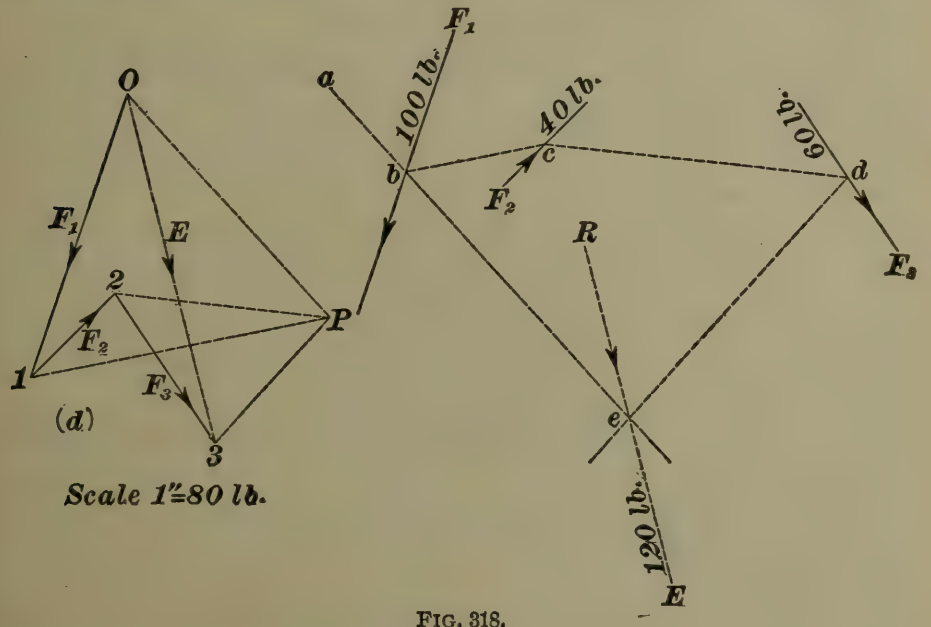

FIG. 318.

the arrow-heads. Construct the polygon of forces *O 1 2 3 O* as shown at (*d*), in the same manner as described in Art. **878,** *O 3* representing the direction and magnitude of the resultant. Everything is now known except the line on

which the point of application of the resultant must lie. To find this, proceed as follows:

Choose *any* point P, and draw $P\ O$, $P\ 1$, $P\ 2$, and $P\ 3$. Choose any point b, on the line of direction of one of the forces as F_1, and draw lines through b parallel to $P\ O$ and $P\ 1$, the latter intersecting F_2, or F_2 prolonged, in c. Draw $c\ d$ parallel to $P\ 2$, and intersecting F_3, or F_3 prolonged, in d. Draw $d\ e$ parallel to $P\ 3$, intersecting the line $a\ b\ e$, parallel to $P\ O$, in e. The point e is a point on the line of direction of the resultant of the three forces. Hence, through e, draw R parallel and equal to $O\ 3$ and acting in the same direction; it will be the resultant.

The method just described is applicable to any number of forces considered as acting in the same plane. The resultant can also be found when the forces act in different planes, but the method of finding it will not be described here.

The point P is called the **pole**; the lines $P\ O$, $P\ 1$, $P\ 2$, $P\ 3$ joining the pole with the vertexes of the force polygon are called the **strings** or **rays**; the **force diagram** is the figure composed of the force polygon, $O\ 1\ 2\ 3\ O$, the pole, and the strings. The polygon $b\ e\ d\ c\ b$ is called the **equilibrium polygon.**

Since the pole P may be taken anywhere, any number of force diagrams and equilibrium polygons may be drawn, all of which will give the same value for the resultant, and whose lines $d\ e$ and $a\ e$ will intersect on the resultant R. To test the accuracy of the work, take a new pole and proceed as before. If the work has been done correctly, $d\ e$ and $a\ e$ will intersect on R.

The equilibrium polygon gives an easy method of resolving a force into two components.

EXAMPLE.—In Fig. 319, let $F = 16$ pounds be the force, and let it be required to resolve it into two *parallel* components, A and B, at distances respectively of 5 feet and 15 feet from F. What will be the magnitudes of A and B?

SOLUTION.—Draw $O\ 1$ to represent $F = 16$ lb. Choose any convenient pole P, and draw the rays $P\ O$ and $P\ 1$. Take any point a on F

and draw $a\,b$ parallel to $P\,O$, intersecting A in b, and $a\,c$ parallel to $P\,1$, intersecting B in c. Join b and c by the line $b\,c$. Through the pole P, draw $P\,d$ parallel to $b\,c$, intersecting $O\,1$ in d. Then $O\,d$ is the magnitude of A, measure, to the scale to which $O\,1$ was drawn, and $d\,1$ is the magnitude of B to the same scale.

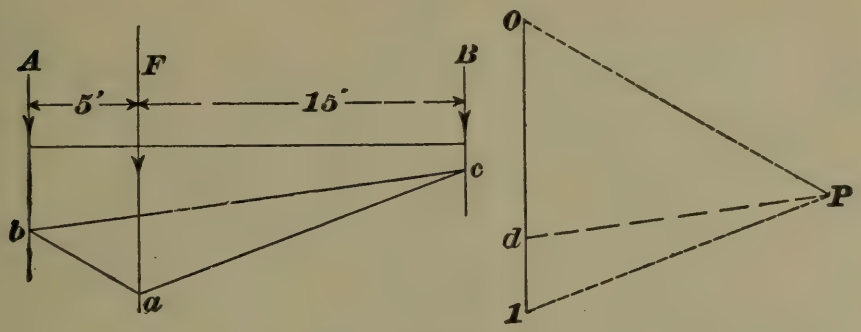

FIG. 319.

1370. If the components are not parallel to the given force, they must intersect its line of direction in a common point.

In Fig. 320, let $F = 16$ pounds be the force; it is required to resolve it into two components A and B, intersecting at a, as shown. Draw $O\,1$ to some convenient scale equal to 16 pounds; then draw $O\,P$ and $1\,P$ parallel to A and B, and $O\,P$ and $P\,1$ are the values of the components A and B, respectively, both in magnitude and direction.

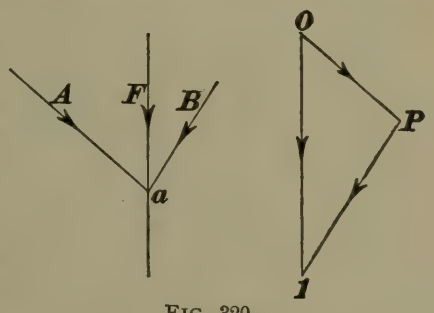

FIG. 320.

EXAMPLE.—Let F_1, F_2, F_3, F_4, and F_5, Fig. 321, be five forces whose magnitudes are 7, 10, 5, 12, and 15 pounds, respectively. It is required to find their resultant and to resolve this resultant into two components parallel to it and passing through the points a and b.

SOLUTION.—Choose any point O, Fig. 321, and draw $O\,1$ parallel and equal to F_1; 1-2 parallel and equal to F_2, etc.; $O\,5$ will be the value of the resultant, and its direction will be from O to 5, opposed to the other forces acting around the polygon. Choose a pole P, and complete the force diagram. Choose a point c on F_1, and draw the equilibrium polygon $c\,d\,e\,f\,g\,h\,c$; the intersection of $c\,h$, parallel to $P\,O$, and $g\,h$, parallel to $P\,5$, gives a point h, on the resultant R. Through h, draw R parallel to $O\,5$, and it will be the position of the line of action

of the resultant of the five forces. The components must pass through the points a and b, according to the conditions; hence, through a and b, draw V_1 and V_2 parallel to R. Since $O5$ represents the magnitude of R, draw hk and hl parallel to PO and $P5$, respectively, as in Fig.

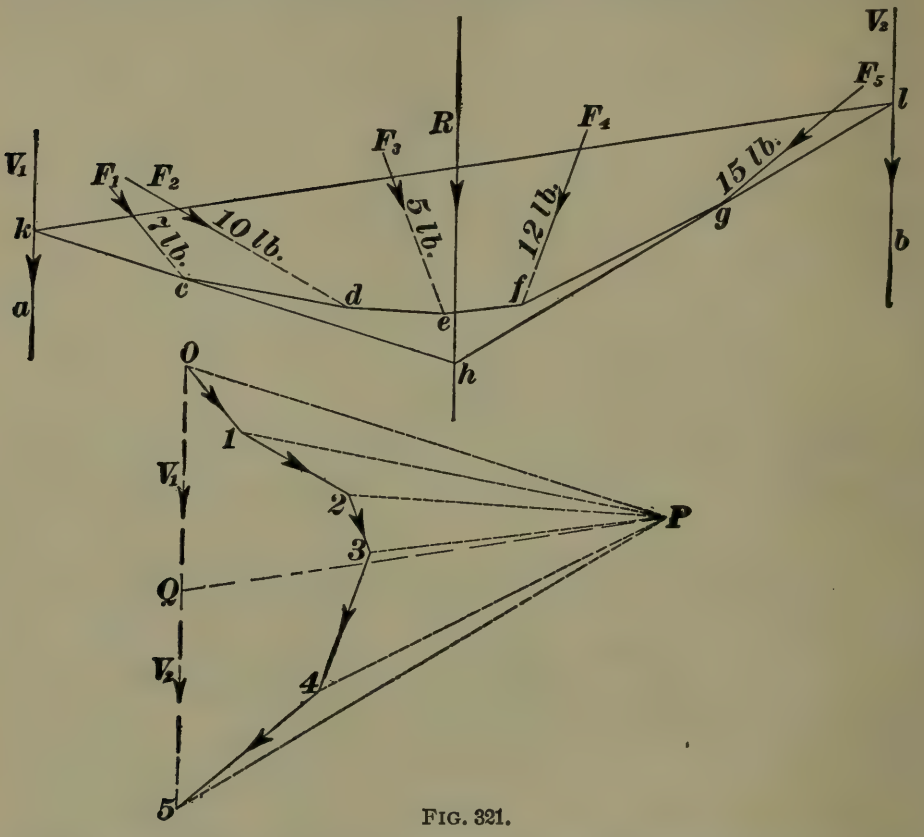

FIG. 321.

319 (they, of course, coincide with ch and gh, since the same pole P is used), intersecting V_1 and V_2 in k and l. Join k and l, and draw PQ parallel to kl. Then, $OQ = V_1$, and $Q5 = V_2$.

COMPOSITION OF MOMENTS.

1371. In Art. **906** it was stated that the moment of a force about a point is the product of the magnitude of the force by the perpendicular distance from the point to the line of action of the force. A force can act in two ways upon a body: it can either produce a motion of translation—that is, cause all the points of the body to move in straight parallel lines—or it can produce a motion of rotation—that is, make the body turn. A *moment* measures the capacity of a force to produce rotation about a given point. For example,

suppose, in Fig. 322, that $A\ C$ is a lever 30 inches long, having a fulcrum at B 10 inches from A. If a weight is suspended from C, it will cause the bar to rotate about B in the direction of the arrow. A weight suspended from A will cause it to revolve in the opposite direction, as indicated by the arrow. Suppose, for simplicity, that the bar itself weighs nothing. If two weights of 12 pounds each are hung at A and C, it is evident that the bar will revolve in the direction of the arrow at C, on account of the arm $B\ C$ being longer than the arm $A\ B$. Let the weight at A be increased until it equals 24 pounds. The bar will then balance exactly, and any additional weight at A will cause the bar to rotate in the opposite direction, as shown by the arrow at that point. When the lever is balanced, it will be found that $24 \times 10 = 12 \times 20$, or, considering B as the center of moments, $24 \times$ perpendicular distance $A\ B = 12 \times$ perpendicular distance $B\ C$. In other words, the moment of W about B must equal the moment of P about B—that is, the two moments must be equal. Further, P tends to cause rotation in the direction in which the hands of a watch move, and will, for convenience, be considered positive, or $+$; W tends to cause rotation in a direction opposite to the hands of a watch, and will be considered negative, or $-$. Adding the two algebraically, $P \times B\ C + (-W \times A\ B) = P \times B\ C - W \times A\ B = 0$, since the two moments are equal. Hence the following general

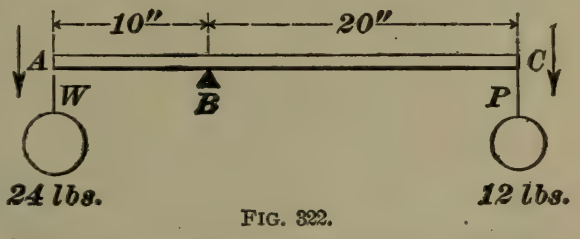

FIG. 322.

Rule.—*One of the necessary conditions of equilibrium is that the* **algebraic** *sum of the moments of all the forces about a given point should equal zero.*

Applications of this rule will occur farther on.

GRAPHICAL EXPRESSIONS FOR MOMENTS.

1372. The moment of a single force may be expressed graphically in the following manner: Let $F = 10$ pounds be the given force (see Fig. 323), and c, at a distance from

$F = f\,c = 7\frac{1}{2}$ feet, be the center of rotation (center of moments). Draw $O\,1$ parallel to F and equal to 10 pounds. Choose any point P as a pole, and draw the rays $P\,O$ and $P\,1$; also draw $P2$ perpendicular to $O\,1$. Through any point b on F, draw the sides $a\,b$ and $g\,b$ of the equilibrium polygon; they correspond to $b\,e$ and $d\,e$, Fig. 318, through the intersection of which the resultant must pass, the resultant F being given in the present case. Prolong $a\,b$, and draw

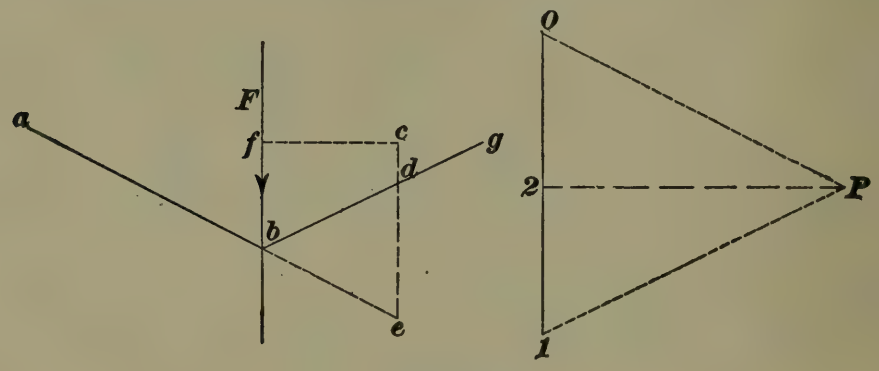

FIG. 323.

$e\,d$ through c parallel to F, intersecting $b\,g$ and $a\,b$ in d and e. It can now be shown that the moment of F about $c = P2 \times d\,e$, when $P2$ is measured to the same scale as $O\,1$, and $e\,d$ is measured to the same scale as $c\,f$.

The line $P2$ is called the **pole distance** and will hereafter be always denoted by the letter H. The line $d\,e$ is called the **intercept.** Hence, the pole distance multiplied by the intercept equals the moment, or, denoting the intercept by y, moment $= H\,y$.

The statement made in the last sentence is one of the most important facts in Graphical Statics, and should be thoroughly understood. In the triangle $P\,O\,1$, the lines $P\,O$ and $P1$ represent the components of the force F in the directions $a\,b$ and $g\,b$, respectively, while the lines of action of those components are $a\,b$ and $g\,b$, meeting at b. As $d\,e$ is limited by $g\,b$ and $a\,b$ (produced), we may give the following definition: The *intercept* of a force whose moment about a point is to be found is the segment (or portion) which the two components (produced, if necessary) cut off

from a line drawn through the center of moments parallel to the direction of the force.

1373. The pole distance and intercept for the moment of several forces about a given point may be determined in a similar manner, by first finding the magnitude and position of the resultant of all the forces; the moment of this resultant about the given point will equal the value of the resultant moment of all the forces which tend to produce rotation about that point.

EXAMPLE.—Let $F_1 = 20$ pounds, $F_2 = 25$ pounds, and $F_3 = 18$ pounds

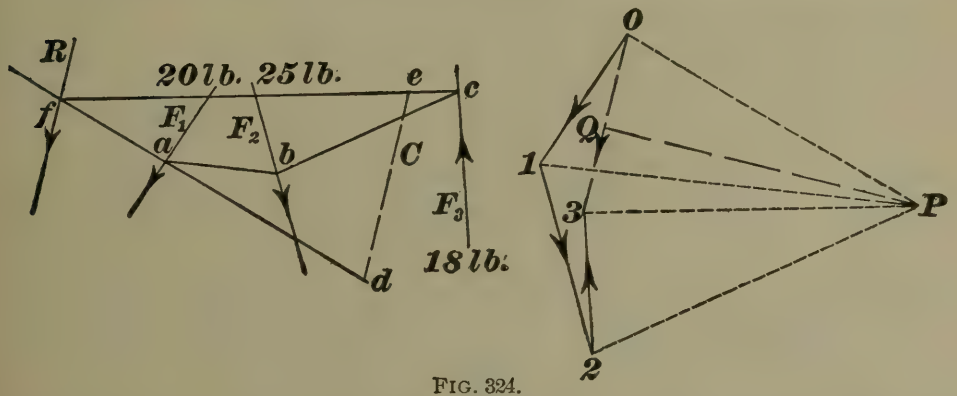

FIG. 324.

be three forces acting as shown in Fig. 324; find their resultant moment about the point C.

SOLUTION.—Draw the force diagram, equilibrium polygon, and resultant R as previously described. Draw $d\,C\,e$ parallel to R. The intercept $d\,e$, multiplied by the pole distance $P\,Q$ = the resultant moment.

1374. If all the forces are parallel, the force polygon is a straight line. This is evident, since if a line of the force polygon be drawn parallel to one of the forces, and from one end of this line a second line be drawn parallel to another force, the second line will coincide with the first.

EXAMPLE.—Let $F_1 = 30$, $F_2 = 20$, and $F_3 = 20$, all in pounds, be three parallel forces acting downwards, as shown in Fig. 325. It is required to find their resultant moment (algebraic sum of the moments) and the moment of their resultant, all moments to be taken about the point C.

SOLUTION.—Lay off $O\,1 = 30$ lb. $= F_1$, $1\text{-}2 = 20$ lb. $= F_2$ and $2\text{-}3 = 20$ lb. $= F_3$, and $O\,3$ is the value of the resultant. Choose some point P as a pole and draw the rays. Take any point, as b, on any force, as F_1, and complete the equilibrium polygon $b\,c\,d\,e\,b$; then, the line of action of the resultant must pass through e. Through C draw $C\,i$ parallel to R and prolong $d\,e$. The moment of R about C equals the pole distance H, multiplied by the intercept $h\,i$, since $h\,i$ is that part of the line drawn through C parallel to R, and included between the lines $b\,e$ and $d\,e$ of the equilibrium polygon which meet upon R. Measuring $h\,i$ to the scale of distances (1 in. = 40 ft.), it equals 23 ft. Measuring H to the scale of forces, it equals 40 lb. Consequently, the moment of R about

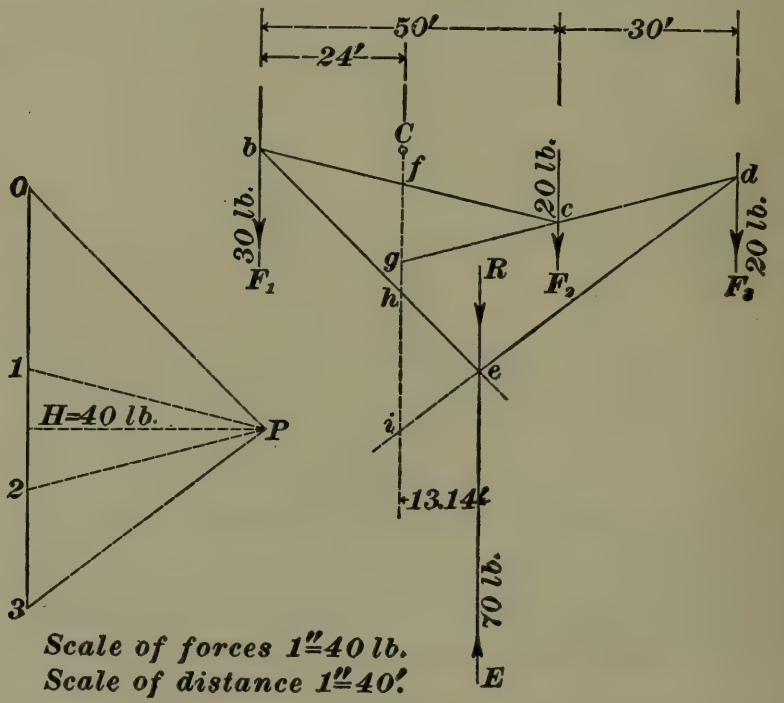

FIG. 325.

$C = 40 \times 23 = 920$ ft.-lb. Considering the force F_3, the intercept is $g\,i$, since F_3 is parallel to R, and, consequently, to $C\,i$; also, $g\,i$ is that part of the line $C\,i$ included between the sides $c\,d$ and $d\,e$, which meet on F_3. Measuring $g\,i$, it is found to equal 28 ft. Hence, the moment of F_3 about $C = 40 \times 28 = 1{,}120$ ft.-lb. The moment of F_2 about $C = H \times f\,g = 40 \times 13 = 520$ ft.-lb. The moment of $F_1 = H \times f\,h = 40 \times 18 = 720$ ft.-lb. Now F_3 and F_2 have positive moments, since they tend to cause rotation in the direction of the hands of a watch, while F_1 has a negative moment, since it tends to cause rotation in the opposite direction. Consequently, adding the moments algebraically, the resultant moment $= 1{,}120 + 520 - 720 = 920$ ft.-lb., the same as the moment of the resultant.

Having described the fundamental principles of Graphical Statics, the subject of Strength of Materials will now be continued, and the stresses due to flexure and torsion discussed.

BEAMS.

1375. Any bar resting upon supports in a horizontal position is called a **beam.**

1376. A **simple beam** is a beam resting upon two supports very near its ends.

1377. A **cantilever** is a beam resting upon one support in its middle, or which has one end fixed (as in a wall) and the other end free.

1378. A **restrained beam** is one which has both ends fixed (as a plate riveted to its supports at both ends).

1379. A **continuous beam** is one which rests upon more than two supports.

In this Course, the continuous beam will not be discussed, as the subject requires a knowledge of higher mathematics.

REACTIONS OF SUPPORTS.

1380. All forces which act upon beams will be considered as vertical, unless distinctly stated otherwise. According to the third law of motion, every action has an equal and opposite reaction. Hence, when a beam is acted upon by downward forces, the supports react upwards. It is required to find the value of the reaction at each support. If a simple beam is uniformly loaded or has a load in the middle, it is evident that the reaction of each support is one-half the load, plus one-half the weight of the beam. If the load is not uniformly distributed over the beam, or if the load or loads are not in the middle, the reactions of the two supports will be different. The upward reactions are considered positive, and the downward forces negative. In

order that a beam may be in equilibrium, three conditions must be fulfilled:

I. The algebraic sum of all vertical forces = 0.

II. The algebraic sum of all horizontal forces = 0.

III. The algebraic sum of the moments of all forces about any point = 0.

Since the loads act downwards and the reactions upwards, the first condition states that the sum of all the loads must equal the sum of the reactions of the supports.

EXAMPLE.—Let R_1 be the reaction of the left support, R_2 the reaction of the right support, and the distance between the two supports 14 feet. Suppose that loads of 50, 80, 100, 70, and 30 pounds are placed

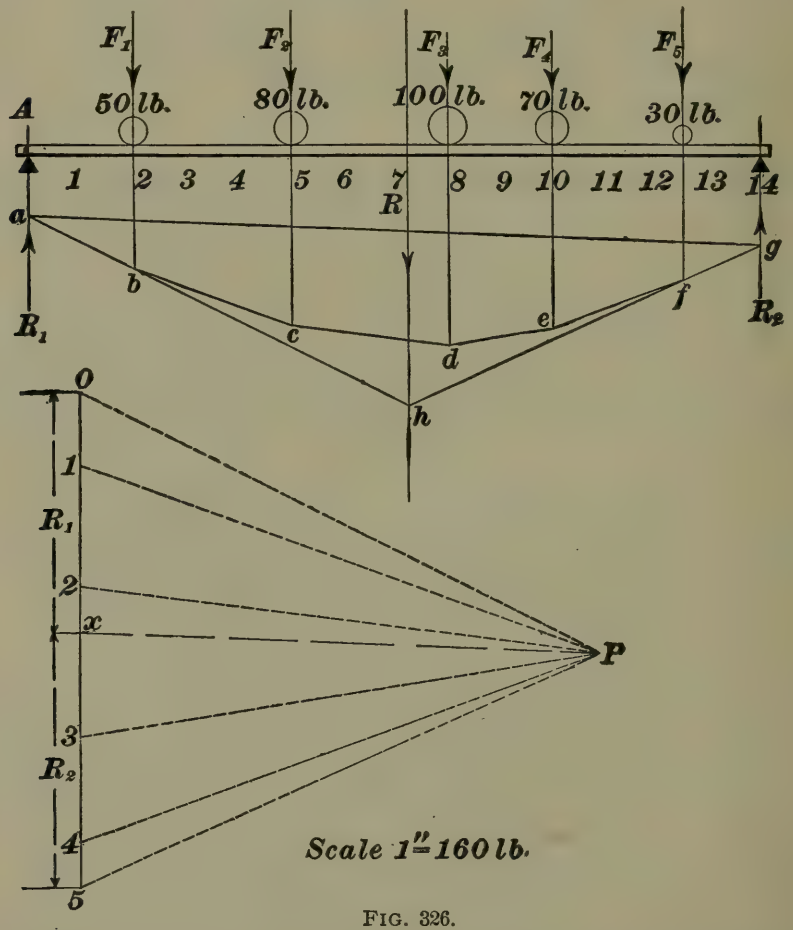

FIG. 326.

on the beam at distances from the left support equal to 2, 5, 8, 10, and 12½ feet, respectively. Required the reactions of the supports, neglecting the weight of the beam. See Fig. 326.

SOLUTION.—The reactions may be found graphically by resolving the resultant of the weights (which, in this case, acts vertically downwards) into two parallel components, passing through the points of support. The sum of the reactions is equal to the sum of the components, but the two sums have different signs. Draw the beam to some convenient scale, and locate the loads as shown in the figure. Draw the force diagram, making $O\ 1 = 50$ lb., $1\text{-}2 = 80$ lb., etc., $O\ 5$ representing the force polygon.

Choose a point b on the line of action of the force F_1, and draw the equilibrium polygon $a\ b\ c\ d\ e\ f\ g\ a$; $a\ b$ and $f\ g$ intersect at h, the point through which the resultant R must pass. Draw $P\ x$ parallel to $a\ g$, and $O\ x$ will be the reaction (= component) R_1, and $x\ 5$ the reaction R_2. Measuring $O\ x$ and $x\ 5$ to the same scale used to draw $O\ 5$, we find $R_1 = 161$ lb., and $R_2 = 169$ lb. By calculation, $R_1 = 160.4$ lb., and $R_2 = 169.6$ lb. This shows that the graphical method is accurate enough for all practical purposes. The larger the scale used, the more accurate will be the results.

The reactions and forces acting upwards will always be considered as positive, or +, and the downward weights as negative, or —. It is plain that the first condition of equilibrium is satisfied when the sum of the positive forces and reactions is equal to the sum of the negative forces.

THE VERTICAL SHEAR.

1381. In Fig. 326, imagine that part of the beam at a minute distance to the left of a vertical line passing through the point of support A, to be acted upon by the reaction $R_1 =$ 160 pounds, and that part to the right of the line to be acted upon by the equal downward force due to the load. The two forces acting in opposite directions tend to shear the beam.

Suppose the line had been situated at the point marked *3* instead of at A; the reaction upwards would then be partly counterbalanced by the 50-pound weight, and the total reaction at this point would be $160 - 50 = 110$ pounds. Since the upward reaction must equal the downward load at the same point, the downward force at *3* also equals 110 pounds, and the shear at this point is 110 pounds. At the point *6*, or any point between *5* and *8*, the downward force due to the weight at the left is $50 + 80 = 130$ pounds, and the upward reaction is 160 pounds. The resultant shear is

therefore, $160 - 130 = 30$ pounds. At any point between *8* and *10*, the shear is $160 - (50 + 80 + 100) = -70$ pounds. The negative sign means nothing more than that the weights exceed the reaction of the left-hand support.

The vertical shear equals the reaction of the left-hand support, minus all the loads on the beam to the left of the point considered.

For a simple beam, the greatest positive shear is at the left-hand support, and the greatest negative shear is at the right-hand support, and both shears are equal to the reactions at those points.

1382. The vertical shear may be represented graphi-

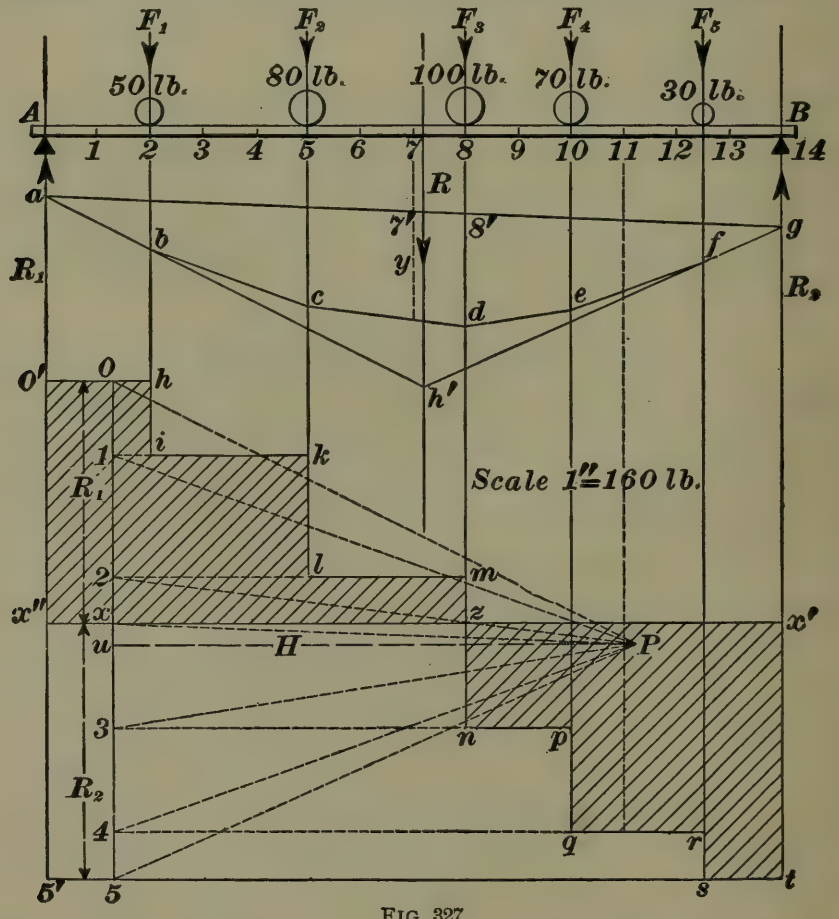

FIG. 327.

cally, as shown in Fig. 327, which is Fig. 326 repeated. Draw the force diagram, continue the lines of action of R_1 and

R_1 downwards and make $O'\ 5' = O\ 5$. Through x draw the horizontal line $x\ x'$, called the **shear axis.** The vertical shear is the same for any point between A and *2* and $= O\ x = O'\ x'' = 160$; hence, draw $O'\ h$ parallel to $x\ x'$, and any ordinate measured from $x\ x'$ to $O'\ h$, between O' and $h =$ 160 pounds = the vertical shear at any point between O' and h when $O'\ h = A\ 2$. Through *1*, draw *1 k* and project the points *2* and *5* upon it, in i and k. Then, the length of the ordinate between $x\ x'$ and $i\ k =$ the vertical shear between *2* and *5*. In the same way, find the remaining points l, m, etc. The broken line $O'\ h\ i$.....t is called the **shear line;** and the figure $O'\ h\ i$.....$r\ s\ t\ x'\ x''$ is called the **shear diagram.** To find the shear at any point, as *11*, project the point upon the shear axis and measure the ordinate to the shear line, drawn through the projected point. If the ordinate is measured from the shear axis upwards, the vertical shear is positive; if downwards, it is negative. For the point *11*, the vertical shear $= -140$ lb. The maximum negative vertical shear is -170 lb. $= x'\ t = x\ 5$. The greatest shear, whether positive or negative, is the one which the beam must be designed to withstand.

1383. A beam seldom fails through shearing, but generally breaks by reason of the load bending and breaking it; that is, through flexure. In order to design a beam to resist flexure, the greatest (maximum) bending moment must be known.

The ***bending moment*** *at any point of a beam is the algebraic sum of the moments of all of the forces (the reaction included) acting upon the beam, on either side of that point, the point being considered as the center of moments.*

The expression "algebraic sum" refers to the fact that, when considering the forces acting at the left of the point taken, the moments of all the forces acting upwards are considered positive, and the moments of all the forces acting downwards are considered negative. Hence, the algebraic sum is the moment of the left reaction about the given point, minus the sum of the moments about the same point of all

the downward forces between the reaction and the given point. Should there be any force or forces acting upwards, their moments must be *added*, since they are positive. If the forces on the right of the point are considered, all lever arms are negative, distances to the left of the point being +, to the right, − (see Art. **1371**). Hence, the downward forces give positive moments, and the right reaction gives a negative moment. This is as it should be, for the downward forces on the right and the upward forces on the left tend to rotate the beam in the direction of the hands of a watch, while the downward forces on the left and the upward forces on the right tend to rotate the beam in the opposite direction.

1384. To find the bending moment for any point of a beam, as 7 in Fig. 327, by the graphical method, draw the vertical line 7-7′ through the point. Let y = that part of the line included between $a\,g$ and $a\,c\,f\,g$ of the equilibrium polygon (= vertical intercept). Then, $H \times y$ = the bending moment. H, of course, = the pole distance = $P\,u$. For any other point on the beam, the bending moment is found in the same manner—i. e., by drawing a vertical line through the point and measuring that part of it included between the upper and lower lines of the equilibrium polygon. The scale to which the intercept y is measured is the same as that used in drawing the length $A\ B$ of the beam. The pole distance H is measured to the same scale as $O\,5$. In the present case, $y = 2.05$ feet, and $H = 349$ pounds; hence, the bending moment for the point 7 is $H\,y = 349 \times 2.05 = 715.45$ foot-pounds.

NOTE.—The expression "foot-pounds," used in stating the value of a moment, must not be confounded with foot-pounds of work. The former means simply that a force has been multiplied by a distance, while the latter means that a resistance has been overcome through a distance. In expressing the value of a moment, the force is usually measured in pounds or tons, and the distance in inches or feet; hence, the moment may be inch-pounds or inch-tons and foot-pounds or foot-tons. Unless otherwise stated, the bending moment will always be expressed in inch-pounds, the length of the beam being always measured in inches, and, consequently, also the length of the intercept y.

1385. If expressed in inch-pounds, the value of the moment just found is $715.45 \times 12 = 8{,}585.4$ inch-pounds.

It will be noticed that after the force diagram and equilibrium polygon have been drawn the value of the bending moment depends solely upon the value of y, since the length $P\,u = H$ is fixed. At the points a and g, directly under the points of support of the beam, $y = 0$; hence, for these two points, bending moment $= H\,y = H \times 0 = 0$; that is, for any simple beam, the bending moment at either support is zero. The greatest value for the bending moment will evidently be at the point 8, since $d\,8'$ is the longest vertical line which can be included between $a\,g$ and $a\,c\,f\,g$.

The figure $a\,c\,e\,g\,a$ is called the **diagram of bending moments.**

1386. Consider now the case of a simple beam uniformly loaded. Let the distance between the supports in Fig. 328 be 12 feet, and let the total load uniformly distributed over the beam be 216 pounds. Divide the load into a convenient number of equal parts, the more the better, say 12, in this case. The load which each part represents is $216 \div 12 = 18$ pounds. For convenience, lay off $O\ C$ on the vertical through the left-hand support, equal to 216 pounds to the scale chosen, and divide it into 12 equal parts, $O\,a$, $a\,b$, etc.; each part will represent 18 pounds to the same scale. Choose a pole P, and draw the rays $P\ O$, $P\,a$, $P\,b$, etc. Through the points d, e, etc., the centers of gravity of the equal subdivisions of the load, draw the verticals $d\,1$, $e\,3$, $f\,5$, etc., intersecting the horizontals through O, a, b, etc., in 1, 3, 5, etc. Draw $O\,1$, 1-2, 2-3, 3-4, 4-5, etc., and the broken line thus found will be the shear line. In drawing the shear line for a uniform load in this manner, it is assumed that each part of the total load is concentrated at its center of gravity, or, in other words, that a force equal to each small load (18 lb.) acts upon the beam at each of the points d, e, f, etc.

Construct the diagram of bending moments in the ordinary manner by drawing $g\,i$ parallel to $P\,O$, $i\,k$ parallel to $P\,a$, etc. Draw $P\,M$ parallel to $g\,h$, and $M\,q$ horizontal; $M\,q$ is the shear axis. When the load is uniform and the

work has been done correctly, *O M* should equal *M C*—that is, the reactions of the two supports are equal.

1387. The shear line is not a broken line in reality, as shown, since the load is distributed evenly over the entire beam, and not divided into small loads concentrated at *d*, *e*, *f*, etc., as was assumed. The points *1*, *3*, etc., are evidently

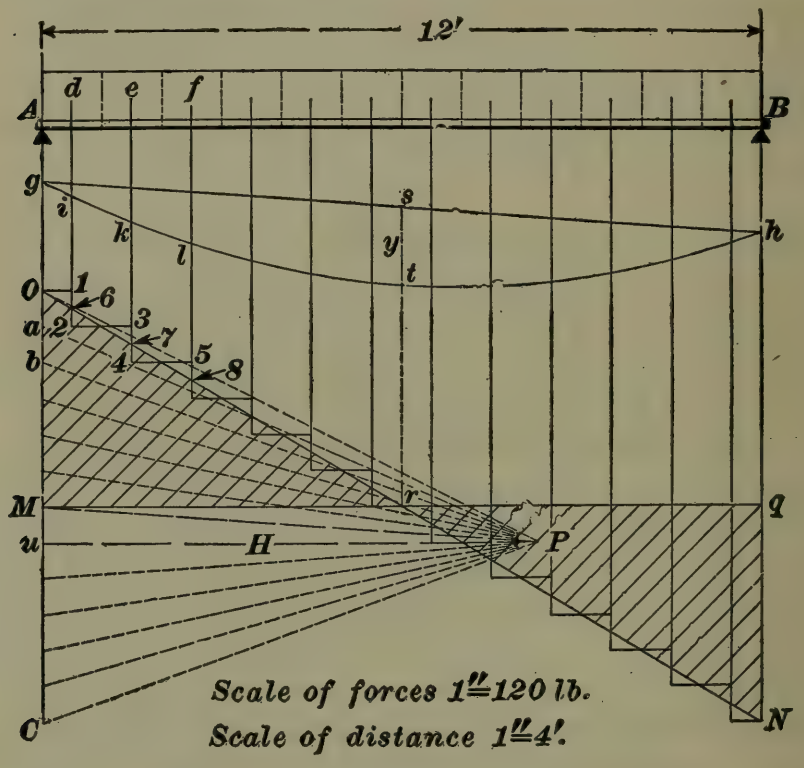

FIG. 328.

too high, and the points *2*, *4*, etc., too low. To find the real shear line, bisect the lines *1-2*, *3-4*, etc., locating the points *6*, *7*, *8*, etc. Trace a line through *O*, *6*, *7*, *8*.....*N*, and it will be the real shear line. For all cases of a uniform load, the shear line will be straight and may be drawn from *O* to *N* directly.

The diagram of bending moments is also not quite exact, but may be corrected by tracing a curve through the points *g* and *h*, which shall be tangent to *g i*, *i k*, *k l*, etc., at their middle points, as shown in the figure.

1388. To find the maximum bending moment for any beam having two supports, draw a vertical line through r, where the shear line cuts the shear axis, and the intercept, $s\,t = y$, on the diagram of bending moments, will be the greatest value of y, and, consequently, the greatest bending moment $= H \times y$. In the present example, $H = P\,u = 247.5$ pounds and maximum $y = s\,t = 15.72$ inches; hence, the maximum bending moment $= H\,y = 247.5 \times 15.72 = 3{,}890.7$ inch-pounds. The above is true, no matter how the beam may be loaded. In Fig. 327, the shear line cuts the shear axis at z, and $d\,8'$, on the vertical through z. was shown previously to be the maximum intercept.

1389. If there is a uniform load on the beam and one or more concentrated loads, as in Fig. 329, the method of finding the moment diagram and shear line is similar to that used in the last case. In Fig. 329, let the length $A\,B$ of the beam be 15 feet; the uniformly distributed load 180 pounds, with two concentrated loads, one of 24 pounds, 5 feet from A, and the other of 30 pounds, 11 feet from A. Draw the beam and loads as shown, the length of the beam and the distances of the weights from A being drawn to scale. Divide the uniform load into a convenient number of equal parts, say 10 in this case; each part will then represent $\frac{180}{10} = 18$ pounds. Draw $A\,O\,C$, as usual, and lay off 3 of the 18-pound subdivisions from O downwards; then lay off 24 pounds, to represent the first weight. Lay off four more of the equal subdivisions, and then the 30-pound weight. Finally, lay off the remaining three equal subdivisions, the point C being the end of the last 18-pound subdivision. $O\,C$ should then equal $180 + 24 + 30 = 234$ pounds to the scale to which the weights were laid off. It will be noticed in the above that the equal subdivisions of the load were laid off on $O\,C$ until that one was reached on which the concentrated loads rested, and that the concentrated loads were laid off before the equal subdivision on which the concentrated load rested was laid off. Had one of the concentrated loads been to the right of the center of gravity of the subdivision on which it

rests, the weight of the subdivision would have been laid off first. Locate the centers of gravity of the equal subdivisions and draw the verticals through them as in the previous case. Choose a pole P, draw the rays, the diagram of bending moments, and the shear axis $M\,q$, as previously described.

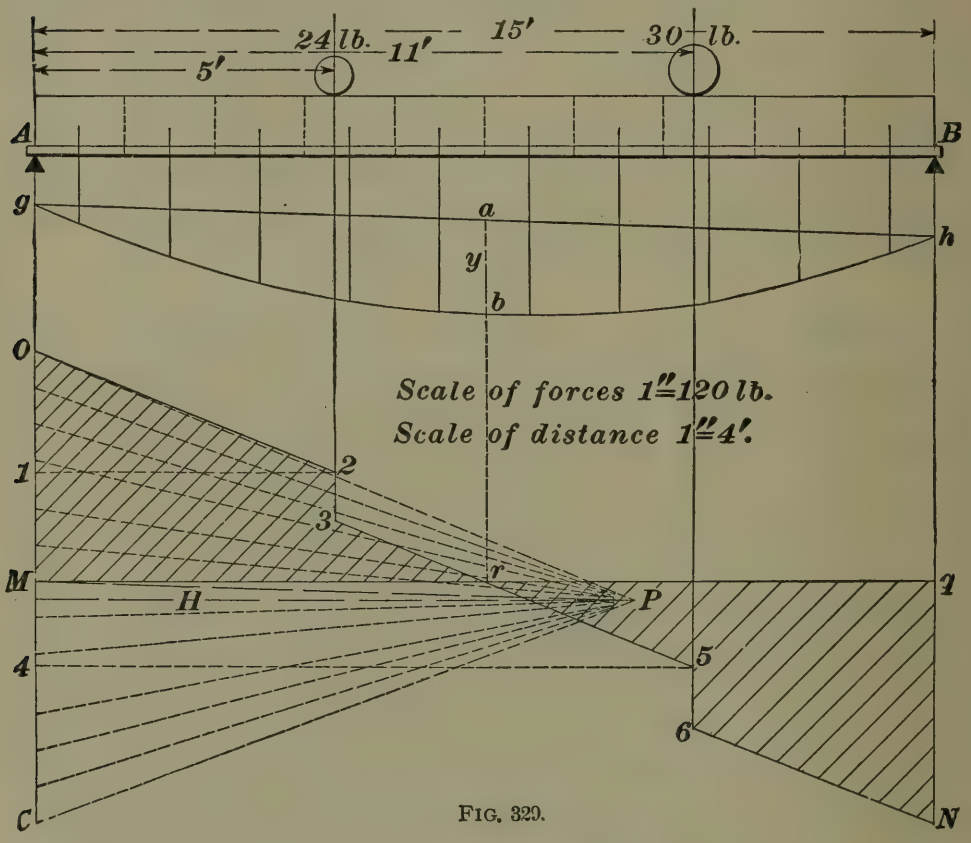

FIG. 329.

To find the maximum bending moment, the shear line must be drawn and its intersection with the shear axis determined.

The weight of the uniform load per foot of length is $\frac{180}{15} = 12$ lb. The weight of that part between A and the center of the 24-lb. weight is $12 \times 5 = 60$ lb. Lay off $O\ 1 = 60$ lb. and draw *1-2* horizontal, cutting the vertical through the center of the 24-lb. weight in *2*. Draw $O\ 2$ and it will be a part of the shear line. Lay off *2-3* vertically downwards, equal to 24 lb., locating the point *3*. Lay off $O\ 4$ equal to $12 \times 11 + 24 = 156$ lb., and draw the horizontal *4-5*, cutting the vertical through the center of the 30-lb.

weight in *5*. Join *3* and *5* by the straight line *3-5*. Lay off *5-6* vertically downwards equal to 30 lb. Draw the horizontal *C N*, intersecting the vertical *B q N* in *N* and join *6* and *N* by the straight line *6 N*. The broken line *O 2-3-5-6 N* is the shear line and cuts the shear axis in the point *r*. Drawing the vertical *r b a*, through *r*, it intersects the moment diagram in *a* and *b*; hence, *a b* is the maximum *y*. For this case, the maximum bending moment $= H \times y = 300 \times 18.36 = 5{,}508$ in.-lb.

It is better, in ordinary practice, to choose the pole *P* on a line perpendicular to *O C* and at some distance from *O C* easily measured with the scale used to lay off *O C*. Thus, suppose *O C* to be laid off to a scale of $1'' = 60$ lb. At some convenient point, as *M*, on *O C*, draw a perpendicular line and choose a point on this line whose distance from *O C* shall be easily measurable, say $3\frac{1}{2}''$. Then, *H* is known to be exactly $60 \times 3\frac{1}{2} = 210$ lb. and will not have to be measured when finding the bending moment *H y*.

1390. If the student has familiarized himself with the method of constructing the shear and moment diagrams for concentrated loads, he will find no difficulty in understanding the preceding operations, which may be condensed into the following

Rule.—*Divide the beam into an even number of parts* (the greater the better), *and the uniform load into half as many. Consider the divisions of the load as concentrated loads applied, alternately, at the various points of division of the beam* (the ends included); *that is, the first point of division* (*the support*) *carries no load, the next one does, the following one does not*, etc. *Then proceed as in the ordinary case of concentrated loads.*

EXAMPLE.—Find the reactions of the supports, the maximum bending moments, and the maximum vertical shear of the beam shown in Fig. 330, which has one overhanging end.

SOLUTION.—Draw *O C* and the force diagram in the usual manner. Construct the bottom curve of the moment diagram in the same manner as in the preceding cases. The side *d e* is parallel to *P 4*; *e h* is parallel to *P C*, and cuts the vertical through the right reaction in *h*.

Join h and g by the straight line $g\,h$, and draw $P\,M$ parallel to $g\,h$. Then, $O\,M = 77$ lb. = left reaction and $M\,C = 173$ lb. = right reaction. The shear line is drawn as in the previous cases until the point n, on the vertical $h\,n$, is reached; $k\,n$ here denotes the vertical shear for any point between the 50-lb. weight and the right support, and this shear is negative. The point k denotes the intersection of the shear axis and the vertical through the right support. For any point to the

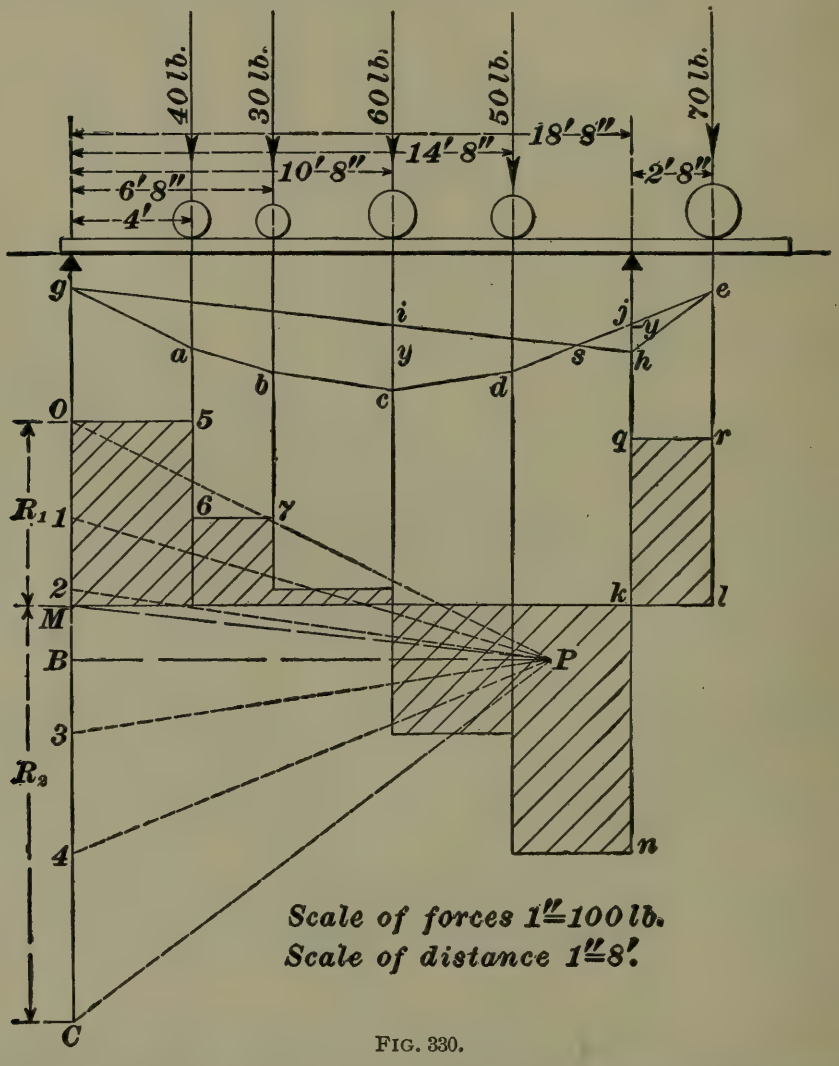

FIG. 330.

right of k, between k and l, the vertical shear is positive, and is equal to 70 lb.; hence, lay off $k\,q$ upwards equal to 70 lb., and draw $q\,r$ horizontal. The line, O 5-6-7 ..... $n\,q\,r$ is the shear line. Measuring $O\,M$, $k\,n$, and $k\,q$, it is found that $O\,M = 77$ lb., $k\,n = -103$ lb., and $k\,q = 70$ lb.; therefore, $k\,n = -103$ lb. = maximum vertical shear; $c\,i$ is evidently the maximum y; hence, the maximum bending moment =

$Hy = P\,B \times c\,i = 200 \times 26'' = 5{,}200$ in.-lb. Any value of y measured in the polygon $g\,a\,b\,c\,d\,s\,g$ is positive, and any value measured in the triangle $e\,h\,s$ is negative. Consequently, the bending moment for any point between s and the vertical, through the center of the 70-lb. weight, is negative, since $H \times (-y) = -Hy$. In all cases, when design-

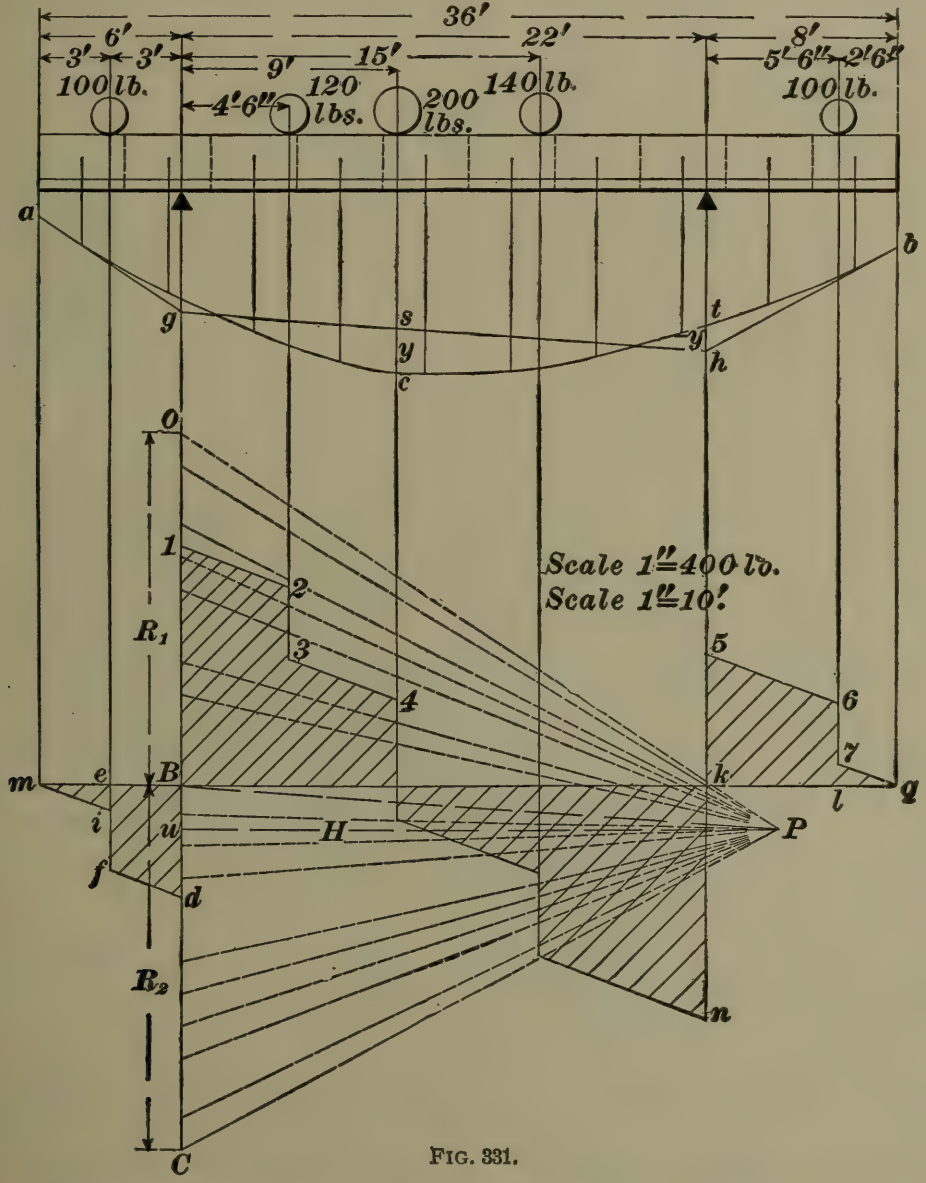

FIG. 331.

ing beams with overhanging studs, the maximum bending moment, whether positive or negative, should be used. In the present case, the maximum negative y, or $h\,j$, is less than the maximum positive y, or $c\,i$; therefore, the maximum negative bending moment is also less than the maximum positive moment.

EXAMPLE.—Fig. 331 shows a beam overhanging both supports, which carries a uniform load of 15 pounds per foot of length, and has five concentrated loads at distances from the supports as marked in the figure. Required the reactions of the supports, the maximum positive and negative bending moments, and the maximum vertical shear.

SOLUTION.—Construct the force diagram and equilibrium polygon in the ordinary manner, continuing the latter to b and a, points on the verticals passing through the ends of the beam. Draw $b\,h$ and $a\,g$ parallel to $P\,C$ and $P\,O$ respectively, intersecting the verticals through the points of support in h and g. Join g and h, and draw $P\,B$ parallel to $g\,h$. Then, $O\,B = 588$ lb. $= R_1$, and $B\,C = 612$ lb. $= R_2$. Through B, draw the shear axis $m\,q$. To draw the shear line, proceed as follows: The shear for any point to the left of the left support is negative, and for any point to the right of the right support is positive; between the two supports it is positive or negative, according to the manner of loading, and the point considered. The negative shear at the left support $= 15 \times 6 + 100 = 190$ lb.; hence, lay off $B\,d$ downwards equal to 190 lb. For a point to a minute distance to the right of e, the shear is $15 \times 3 + 100 = 145$ lb. $= e\,f$, and for a minute distance to the left, it is $15 \times 3 = 45$ lb. $= e\,i$; at m, it is 0. Consequently, $m\,i\,f\,d$ is the shear line between the end of the beam and the left support. Lay off $O\,1 = B\,d = 190$ lb. and draw the shear line *1-2-3-4*----------*n* in the usual manner. Draw the shear line *5-6-7 q*, laying off $k\,5 = 15 \times 8 + 100 = 220$ lb.; $l\,6 = 100 + 15 \times 2\frac{1}{2} = 137\frac{1}{2}$ lb., and *6-7* $= 100$ lb. At q, the vertical shear is again 0. The broken line *m i f d 1-2-3*----------*n 5-6-7 q* is the shear line. The maximum positive bending moment is $H \times y = P\,u \times s\,c = 1{,}000 \times 22.5 = 22{,}500$ in.-lb. The greatest maximum negative moment is $H \times (-y) = P\,u \times -t\,h = 1{,}000 \times -11.6 = -11{,}600$ in.-lb. It will be noticed that there are two negative and one positive maximum bending moments.

1391. The student should now be able to find the bending moment for any beam having but two supports, whatever the character of the loading. The bending moment plays a very important part in the flexure of beams, which is the next subject to be considered. In all cases of loading heretofore considered, no other forces than the loads themselves have been considered. Should forces act upon the beam which are not vertical, the force polygon will be no longer a straight line, but a broken line somewhat similar in character to *O 1-2-3-4-5* in Fig. 321.

In Fig. 332 is shown a cantilever beam projecting 10 ft. from the wall. It carries a uniform load of 16 pounds per foot of length, and a concentrated load of 40 pounds at a distance of $3\frac{1}{4}$ feet from the wall. The maximum bending moment is required. The method is similar to the last, except that, as there is but one support, there can be but one reaction. Since the beam is 10 feet long, the total

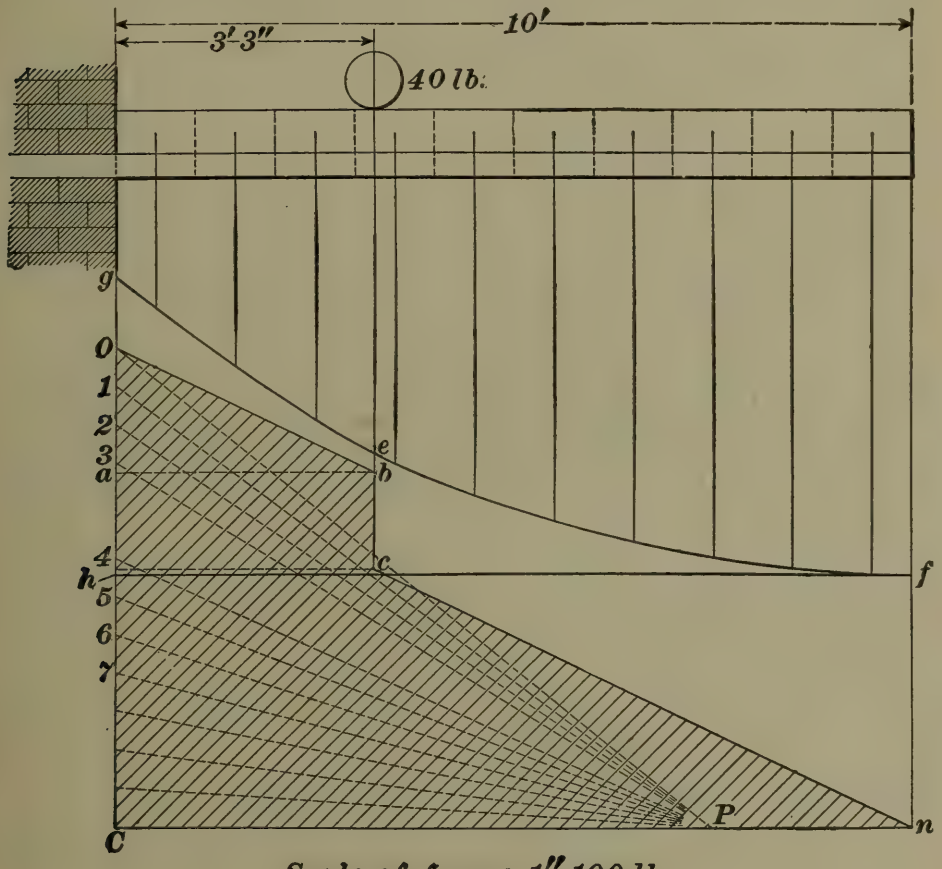

Scale of forces 1"=100 lb.
Scale of distance 1"=3'.

FIG. 332.

weight of the uniform load is $16 \times 10 = 160$ pounds. Hence, the reaction $= 160 + 40 = 200$ pounds.

Draw $O\ C$ equal to 200 lb., to some convenient scale. Draw $P\ C$ perpendicular to $O\ C$ at C and choose the pole P at a convenient distance from $O\ C$. For convenience, divide the uniform load into 10 equal parts, as shown; then,

each part will represent 16 lb. Lay off O *1*, *1-2*, *2-3*, each equal to 16 lb., and *3-4* equal to 40 lb. Also, *4-5*, *5-6*, *6-7*, etc., equal to 16 lb. each. 3 ft. 3 in. $= 3\frac{1}{4}$ ft., and $16 \times 3\frac{1}{4} = 52$ lb. Lay off $O\,a = 52$ lb., and draw $a\,b$, meeting the vertical through the center of the weight in b. Draw $O\,b$; lay off $b\,c$ equal to 40 lb. and draw $C\,n$. $O\,b\,c\,n$ is the shear line. The perpendicular through the point C coincides with $P\,C$; hence, $n\,P\,C$ is the shear axis. Draw the line $g\,e\,f$ of the moment diagram as in the previous cases. In Fig. 329, and in the preceding figures, the line $g\,h$ was drawn connecting the extreme ends of the bottom line; in other words, it joined the points where the equilibrium polygon cut the lines of direction of the reactions of the supports. This cannot be done in this case, because there is no right reaction; therefore, $g\,h$ must be drawn by means of some other property of the polygon. In the previous cases, the shear axis was drawn perpendicular to $O\,C$ at the point where a line through the pole P parallel to $g\,h$ cut $O\,C$, or, in other words, the shear axis was drawn through the point which marked the end M of the left reaction $O\,M$. In the present case, Fig. 332, the point C is the end of the left reaction; hence, $f\,h$ is parallel to $P\,C$, $h\,g$ is the maximum y, and the bending moment $= H\,y = P\,C \times h\,g = 250 \times 45 =$ 11,250 inch-pounds.

It will also be noticed that the distance $y = h\,g$ is measured from the line $h\,f$ upwards, while, for all points between the supports in the previous examples, this distance was measured downwards. The same observation is true for any point between h and f; hence, for a cantilever, all bending moments are negative.

1392. All the cases of beams heretofore given might have been solved by analytical methods—that is, by algebraic processes and formulas; but the graphical method is to be preferred, as it is usually shorter, very nearly as accurate, and less liable to error. Moreover, when the diagram has once been drawn, both the bending moment and the shear for any point can be instantly determined. Ex-

cept in special cases, the graphical method will be employed to determine the maximum bending moment, but in some particular cases formulas will be used, by which the result can be obtained more quickly than by the graphical method.

EXAMPLES FOR PRACTICE.

1. A simple beam 24 feet long carries 4 concentrated loads of 160, 180, 240, and 120 pounds at distances from the left support of 4, 10, 16, and 21 feet, respectively. (*a*) What are the values of the reactions? (*b*) What is the maximum bending moment in inch-pounds?

Ans. $\begin{cases} (a)\ R_1 = 333\frac{1}{3}\text{ lb.};\ R_2 = 366\frac{2}{3}\text{ lb.} \\ (b)\ 28{,}480\text{ in.-lb.} \end{cases}$

2. A simple beam carries a uniform load of 40 pounds per foot, and supports two concentrated loads of 500 and 400 pounds at distances from the left support of 5 and 12 feet, respectively. The length of the beam is 18 feet. What are (*a*) the reactions? (*b*) The maximum bending moment in inch-pounds?

Ans. $\begin{cases} (a)\ R_1 = 854\frac{4}{9}\text{ lb.};\ R_2 = 765\frac{5}{9}\text{ lb.} \\ (b)\ 48{,}846\text{ in.-lb.} \end{cases}$

3. A cantilever projects 10 feet from a wall and carries a uniform load of 60 pounds per foot; it also supports three concentrated loads of 100, 300, and 500 pounds at distances from the wall of 2, 5, and 9 feet, respectively. Required, (*a*) the maximum vertical shear, and (*b*) the maximum bending moment in inch-pounds.

Ans. $\begin{cases} (a)\ -1{,}500\text{ lb.} \\ (b)\ -110{,}400\text{ in.-lb.} \end{cases}$

4. A beam which overhangs one support sustains six concentrated loads of 160 lb. each at distances from the left support of 4 ft. 9 in., 7 ft., 9 ft. 6 in., 12 ft., 15 ft., and 18 ft. 3 in., respectively, the distance between the supports being 16 ft. What are (*a*) the reactions? (*b*) The maximum bending moment?

Ans. $\begin{cases} (a)\ R_1 = 295\text{ lb.};\ R_2 = 665\text{ lb.} \\ (b)\ 20{,}460\text{ in.-lb.} \end{cases}$

5. A beam which overhangs both supports equally carries a uniform load of 80 pounds per foot, and has a load of 1,000 pounds in the middle, the length of the beam being 15 feet, and the distance between the supports 8 feet. What is (*a*) the vertical shear? (*b*) The maximum bending moment?

Ans. $\begin{cases} (a)\ 820\text{ lb.} \\ (b)\ 25{,}800\text{ in.-lb.} \end{cases}$

NOTE.—The student may not obtain the exact answers given above, but if his results do not differ by more than 1%, he will know that his method is right.

NEUTRAL AXIS.

1393. In Fig. 333, let $A\ B\ C\ D$ represent a cantilever. Suppose that a force F acts upon it at its extremity A. The beam will then be bent into the shape shown by $A'\ B\ C\ D'$.

It is evident from the cut that the upper part $A' B$ is now longer than it was before the force was applied; i. e., $A' B$ is longer than $A B$. It is also evident that $D' C$ is shorter than $D C$. Hence, the effect of the force F in bending the beam is to lengthen the upper fibers and to shorten

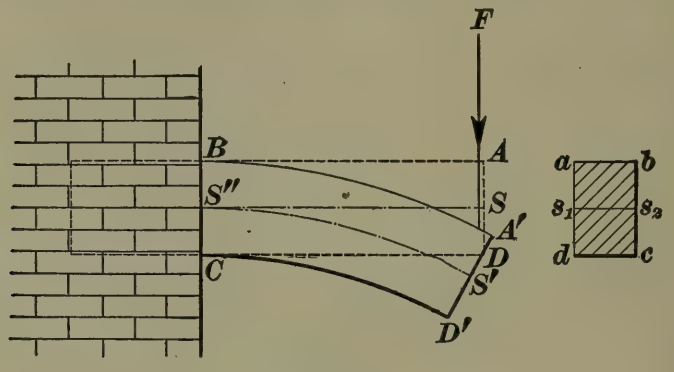

FIG. 333.

the lower ones. In other words, when a cantilever is bent through the action of a load, the upper fibers are in tension and the lower fibers in compression. The reverse is the case in a simple beam in which the upper fibers are in compression and the lower fibers in tension. Further consider-

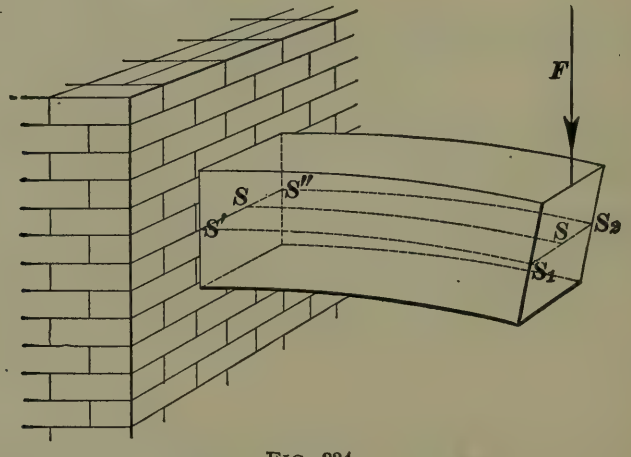

FIG. 334.

ation will show that there must be a fiber, $S S''$, which is neither lengthened nor shortened when the beam is bent, i. e., $S' S'' = S S''$. When the beam is straight the fiber $S S''$, which is neither lengthened nor shortened when the beam is bent, is called the **neutral line.** There may be

any number of neutral lines dependent only on the width of the beam. For, let $b\ a\ d\ c$, Fig. 333, be a cross-section of the beam. Project s upon it in s_1. Make $b\ s_2 = a\ s_1$ and draw $s_1\ s_2$; then, any line in the beam which touches $s_1\ s_2$ and is parallel to $S\ S''$ is a neutral line. Thus, in Fig. 334, $S_1\ S'$, $S\ S$, $S_2\ S''$, etc., are all neutral lines. The line $S_1\ S_2$ is called the **neutral axis,** and the surface $S_1\ S'\ S''\ S_2$ is called the **neutral surface.** The neutral axis, then, is the line of intersection of a cross-section with the neutral surface. It is shown in works on mechanics that *the neutral axis always passes through the center of gravity of the cross-section of the beam.*

1394. Experimental Law.—*When a beam is bent, the horizontal elongation (or compression) of any fiber is directly proportional to its distance from the neutral surface, and, since the strains are directly proportional to the horizontal stresses in each fiber, they are also directly proportional to their distances from the neutral surface, provided the elastic limit is not exceeded.*

1395. Suppose the beam to be a rectangular prism, then every cross-section will be a rectangle, and the neutral axis will pass through the center o. See Fig. 335.

Let the perpendicular distance from the neutral axis $M\ N$ to the *outermost fiber* be denoted by c, and the horizontal unit stress (stress per square inch) at the distance c from the axis by S. If a is the area of a fiber, the stress on the outermost fibers will be $a\,S$. The stress on a fiber at the distance unity (1 inch) from MN is $\frac{a\,S}{c}$; and the stress on a fiber at the distance r_1 is $\frac{a\,S}{c} \times r_1 = \frac{a\,S\,r_1}{c}$. The moment of this stress about the axis MN is $\frac{a\,S\,r_1}{c} \times r_1 = \frac{a\,S\,r_1^2}{c} = \frac{S}{c}\,a\,r_1^2$. The moment of the

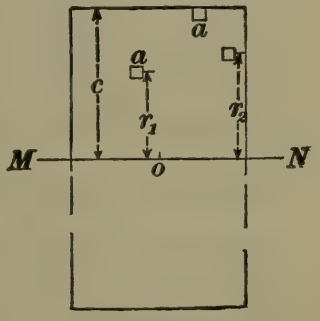

FIG. 335.

stress on any other fiber at a distance r_2 from MN is evidently $\frac{S}{c} a r_2^2$, and for a distance r_3, $\frac{S}{c} a r_3^2$, etc. If n is the number of fibers, the sum M of the moments of the horizontal stresses on all the fibers is

$$M = \frac{S}{c} a r_1^2 + \frac{S}{c} a r_2^2 + \frac{S}{c} a r_3^2 +, \text{ etc.}, =$$

$$\frac{S}{c}(a r_1^2 + a r_2^2 + a r_3^2 + \ldots\ldots a r_n^2) = \frac{S}{c} a (r_1^2 + r_2^2 + r_3^2 + \ldots\ldots r_n^2).$$

Now, let r be a quantity whose square equals the mean of the squares of $r_1, r_2, r_3, \ldots\ldots r_n$. Then, $r^2 = \frac{r_1^2 + r_2^2 + \ldots\ldots + r_n^2}{n}$; and, therefore, $r_1^2 + r_2^2 + r_3^2 + \ldots\ldots + r_n^2 = n r^2$. Substituting above, we get $M = \frac{S}{c} n a r^2$. But, since a is the area of one fiber, $n a$ is the area of all the fibers—that is, the area A of the cross-section; hence, the sum of the moments of all the horizontal stresses $= \frac{S}{c} A r^2$.

1396. The expression $A r^2$, which is found by dividing a section into a large number of minute areas (a, a, etc.), multiplying each area by the square of its distance from an axis (r_1^2, r_2^2, r_3^2, etc.), and then adding the products thus obtained, is called the **moment of inertia** of the section with respect to that axis, and is usually denoted by the letter I. Hence,

$$I = A r^2. \qquad \textbf{(115.)}$$

1397. The quantity r, whose square is the mean of the squares of all the distances of the minute areas from the axis, is called the **radius of gyration.**

1398. The sum of the moments of all the horizontal stresses may then be written as $\frac{S}{c} A r^2 = \frac{S}{c} I$, or $S \frac{I}{c}$. This expression is called the **resisting moment,** since it is the measure of the resistance of the beam to bending (and, consequently, to breaking) when loaded. The resisting moment must equal the bending moment when the beam

is in equilibrium; hence, denoting the bending moment by M,

$$M = S_4 \frac{I}{c}. \qquad \textbf{(116.)}$$

1399. The values of I and c depend wholly upon the size and form of the cross-section of the beam, and S_4 is the ultimate strength of flexure of the material.

In Table 29, the average ultimate strength of flexure S_4 is given for a number of different materials.

TABLE 29.

Material.	Ultimate Strength of Flexure in Lb. per Sq. In. S_4.
Cast Iron	38,000
Wrought Iron	45,000
Steel	120,000
Brass	17,000
Ash	14,000
Brick	1,000
Stone	2,000
Hemlock	7,200
Oak, white	12,500
Pine, white	9,000
Pine, yellow	11,000
Hickory	16,000

1400. Exact values of I for most cross-sections can only be determined by the aid of the calculus. The least value of I occurs when the axis passes through the center of gravity of the cross-section—that is, when I is found with reference to the neutral axis.

The least moments of inertia for a number of different sections are given in the Table of Moments of Inertia; also, the area of the sections and the values of c. The dotted line indicates the position of the neutral axis, about which the moment of inertia is taken.

In the Table of Moments of Inertia, A is the area of the section, and π = ratio of the circumference of a circle to its diameter = 3.1416. It will be noticed that d is always taken vertically.

1401. To use formula **116**, find the bending moment in inch-pounds by the graphical method previously described, or calculate it by means of the Table of Bending Moments. If it is desired to find the size of a beam that will safely resist a given bending moment, take S_4 from Table 29, Art. **1399**, and divide it by the proper factor of safety taken from Table 28. Then, formula **116** becomes

$$M = \frac{S_4 I}{f c}. \qquad \textbf{(117.)}$$

From this $\frac{I}{c} = \frac{Mf}{S_4}$. Substituting the values of M, f, and S_4, the value of $\frac{I}{c}$ is found. The kind and shape of beam having been decided upon, the size can be so proportioned that $\frac{I}{c}$ for the section shall not be less than the value calculated above. An example will make this clear.

EXAMPLE.—What should be the size of an ash girder to resist safely a bending moment of 28,000 inch-pounds, the cross-section to be rectangular and the load steady?

SOLUTION.—$M = \frac{S_4 I}{f c}$, or $\frac{I}{c} = \frac{Mf}{S_4}$.

$M = 28{,}000$; from Table 29, Art. **1399**, $S_4 = 14{,}000$; from Table 28, Art. **1362**, $f = 8$.

Then, $\frac{I}{c} = \frac{28{,}000 \times 8}{14{,}000} = 16$.

From the table of Moments of Inertia, $I = \frac{b d^3}{12}$ and $c = \frac{d}{2}$ for a rectangle; hence, $\frac{I}{c} = \frac{bd^3}{12} \times \frac{2}{d} = \frac{b d^2}{6} = 16$, or $b d^2 = 96$. Any number of values of b and d can be found that will satisfy this equation. If b is taken as 6 inches, $d^2 = \frac{96}{6} = 16$ and $d = \sqrt{16} = 4$. Hence, the beam may be a 6×4, with the short side vertical. When possible, it is always better to have the longer side vertical. If b is taken as 2 inches, $d^2 = 48$ and $d = \sqrt{48} = 7$ inches, nearly; hence, a 2×7 will also

answer the purpose. The advantage of using a 2×7 instead of a 6×4 is evident, since the 6×4 contains nearly twice as much material as the 2×7. Thus, the area of the cross-section of a 6×4 is 24 square inches, and of a 2×7, 14 square inches. Moreover, the 2×7, with its long side vertical, is slightly stronger than the 6×4, with its short side vertical, since $\frac{I}{c} = \frac{2 \times 7^2}{6} = 16\frac{1}{3}$ for the former, and $\frac{6 \times 4^2}{6} = 16$ for the latter. If the 6×4 had its longer side vertical, thus making it a 4×6, $\frac{I}{c}$ would then equal $\frac{4 \times 6^2}{6} = 24$, and the safe bending moment could be increased to $M = \frac{S_4 I}{f c} = \frac{14{,}000 \times 24}{8} = 42{,}000$ in.-lb.

1402. If the breaking bending moment, form and size of the cross-section of the beam are known, the ultimate strength of flexure S_4 can be readily found from formula **116**, by substituting the values of M, I, and c, and solving for S_4.

EXAMPLE.—A cast iron bar, 2 inches square, breaks when the maximum bending moment = 63,360 inch-pounds; what is its ultimate strength of flexure?

SOLUTION.—$M = S_4 \frac{I}{c}$, or $S_4 = \frac{M c}{I}$. $c = \frac{d}{2} = 1''$.

$I = \frac{d^4}{12} = \frac{2^4}{12}$; therefore, $S_4 = \frac{63{,}360 \times 1}{\frac{1}{12} \times 2^4} = 47{,}520$ lb. per sq. in.

1403. In order to save time in calculating, the bending moments for cases of simple loading are given in the Table of Bending Moments. W denotes a concentrated load, and w the uniform load per inch of length. All dimensions are to be taken in inches when using the formulas.

For any other manner of loading than is described in the Table of Bending Moments, the maximum bending moment must be found by the graphical method.

EXAMPLE.—A wrought iron cantilever, 6 feet long, carries a uniform load of 50 pounds per inch. The cross-section of the beam is an equilateral triangle, with the vertex downwards; what should be the length of a side?

SOLUTION.—$M = \frac{w l^2}{2}$, from the Table of Bending Moments, $= \frac{50 \times (6 \times 12)^2}{2} = 129{,}600$ in.-lb. $I = \frac{b d^3}{36}$ and $c = \frac{2}{3} d$, from the Table

of Moments of Inertia; hence, $\frac{I}{c} = \frac{b\,d^2}{24}$. $S_4 = 45{,}000$, from Table 29, Art. **1399,** and $f = 4$, from Table 28, Art. **1362.** Therefore, $129{,}600 = \frac{45{,}000}{4} \times \frac{b\,d^2}{24}$, or $b\,d^2 = \frac{129{,}600 \times 4 \times 24}{45{,}000} = 276.48$. Since an equilateral triangle has been specified, b can not be given *any* convenient value in order to find d. For an equilateral triangle, $d = b \sin 60° = .866\ b$. Hence, $b\,d^2 = b\ (.866\ b)^2 = .75\ b^3$. Therefore, $b\,d^2 = .75\ b^3 = 276.48$ or $b = \sqrt[3]{\frac{276.48}{.75}}$ $\log b = \frac{\log 276.48 - \log .75}{3} = .85553$, or $b = 7.17''$, nearly.

EXAMPLE.—What weight would be required to break a round steel bar 4 inches in diameter, 16 feet long, fixed at both ends and loaded in the middle?

SOLUTION.—Use formula **116;** $M = \frac{S_4\,I}{c}$. Here $M = \frac{W\,l}{8}$, from the Table of Bending Moments, Vol. V; $S_4 = 120{,}000$; $\frac{I}{c} = \frac{\frac{1}{64}\pi\,d^4}{\frac{1}{2}d} = \frac{\pi\,d^3}{32}$. Hence, $\frac{W\,l}{8} = \frac{W \times (16 \times 12)}{8} = \frac{120{,}000 \times 3.1416 \times 4^3}{32}$, or $W = \frac{120{,}000 \times 3.1416 \times 64 \times 8}{16 \times 12 \times 32} = 31{,}416$ lb.

DEFLECTION OF BEAMS.

1404. The deflection, or amount of bending, produced in a beam by one or more loads is given by certain general formulas, whose derivation is too complicated to be given here. We shall give the formulas only, illustrating their application by examples.

In the third column of the Table of Bending Moments are given expressions for the value of the greatest deflection of a beam when loaded as shown in the first column. From this it is seen that the deflection s equals a constant (depending upon the manner of loading the beam and upon the condition of the ends—whether fixed or free), multiplied by $\frac{W\,l^3}{E\,I}$. Let a represent the constant and s the deflection; then,

$$s = a\,\frac{W\,l^3}{E\,I}. \qquad \textbf{(118.)}$$

In the above formula, E = coefficient of elasticity, and is to be taken from Table 25, Art. **1356**, l = length in inches, W = concentrated load in pounds, W' = total uniform load in pounds, and I is the moment of inertia about the neutral axis; a has values varying from $\frac{1}{384}$ to $\frac{1}{3}$.

It will be noticed that the deflection is given for only nine cases; for any other manner of loading a beam than those here given, it is necessary to use the calculus to obtain the deflection.

EXAMPLE.—What will be the maximum deflection of a simple wooden beam 9 feet long, whose cross-section is an ellipse, having axes of 6 inches and 4 inches (short axis vertical), under a concentrated load of 1,000 pounds?

SOLUTION.—Use formula **118**, $s = a\frac{Wl^3}{EI}$. From the Table of Bending Moments,

$$a = \frac{1}{48},\ W = 1{,}000 \text{ lb.},\ l = 9 \times 12 = 108 \text{ in.},$$

$$E = 1{,}500{,}000 \text{ and } I = \frac{\pi b d^3}{64} = \frac{\pi \times 6 \times 4^3}{64}.$$

Hence, $s = \dfrac{1{,}000 \times 108^3 \times 64}{48 \times 1{,}500{,}000 \times \pi \times 6 \times 64} = .9282''$.

1405. The principal use of the formula for deflection is to determine by its means the stiffness of a beam or shaft. In designing machinery, it frequently occurs that a piece may be strong enough to sustain the load with perfect safety, but the deflection may be more than circumstances will permit; in this case, the piece must be made larger than is really necessary for mere strength. An example of this occurs in the case of locomotive guides, and the upper guides of a steam engine when the engine runs under. It is obvious that they must be very stiff. In such cases it is usual to allow a certain deflection, and then proportion the piece so that the deflection shall not exceed the amount decided upon.

EXAMPLE.—The breadth of the guides of a certain locomotive is not to exceed $2\frac{1}{4}$ inches. Regarding the guides as fixed at both ends, (*a*) what must be their depth to resist a load of 10,000 pounds at the middle? The guides are made of cast iron and are 38 inches long between the points of support. (*b*) What weight would these guides be able to support with safety? The deflection must not exceed $\frac{1}{200}$ of an inch. The cross-section is, of course, rectangular.

SOLUTION.—Since the load comes on two guides, each piece must support $10{,}000 \div 2 = 5{,}000$ lb. In the formula,

$$s = \frac{1}{200} = a\frac{Wl^3}{EI},\quad a = \frac{1}{192}\text{ for this case, } W = 5{,}000,\ l = 38,$$

$E = 15{,}000{,}000$, and $I = \frac{b\,d^3}{12} = \frac{2\frac{1}{4}\,d^3}{12} = \frac{3}{16}d^3$. Substituting,

$$(a)\quad s = \frac{5{,}000 \times 38^3 \times 16}{192 \times 15{,}000{,}000 \times 3d^3} = \frac{1}{200},$$

$$\text{or } d = \sqrt[3]{\frac{5{,}000 \times 38^3 \times 16 \times 200}{192 \times 15{,}000{,}000 \times 3}} = 4.67'',\ \text{nearly, say } 4\tfrac{11}{16}''.\quad \text{Ans.}$$

(b) To find the weight which these guides could support with safety, use formula **117**, $M = \frac{S_4\,I}{f\,c}$, in which $M = \frac{W\,l}{8}$, $S_4 = 38{,}000$, $f = 10$, $\frac{I}{c} = \frac{b\,d^2}{6} = \frac{2\frac{1}{4} \times (4\frac{11}{16})^2}{6} = \frac{50{,}625}{6{,}144}$. Substituting,

$$W = \frac{38{,}000 \times 50{,}625 \times 8}{10 \times 6{,}144 \times 38} = 6{,}592\text{ lb.}\quad \text{Ans.}$$

Hence, the beam is over 30% stronger than necessary, the extra depth being required for stiffness.

EXAMPLES FOR PRACTICE.

1. How much will a simple wooden beam 16 ft. long, 2 in. wide and 4 in. deep deflect under a load in the middle of 120 lb.? Ans. 1.106″.

2. What should be the size of a rectangular yellow pine girder 20 ft. long, to sustain a uniformly distributed load of 1,800 lb.? Assume a factor of safety for a varying stress. Ans. 5″ × 8″.

3. A hollow cylindrical beam, fixed at both ends, has diameters of 8 in. and 10 in. If the beam is 30 ft. long and is made of cast iron, (a) what steady load will it safely support at 15 ft. from one of the supports? (b) What force will be required to rupture the beam if applied at this point?

Ans. { (a) 8,158 lb. (b) 48,946 lb.

4. A simple cylindrical wrought-iron beam, resting upon supports 24 ft. apart, sustains three concentrated loads of 350 lb. each, at distances from one of the supports of 5, 12, and 19 ft.; what should be the diameter of the beam to withstand shocks safely? Ans. 4.71″, say $4\frac{3}{4}$″.

5. Find the value of $\frac{I}{c}$ for a hollow rectangle whose outside dimensions are 10 in. and 13 in., and inside dimensions are 8 in. and 10 in.; (a) when the long side is vertical; (b) when the short side is vertical.

Ans. { (a) 179.103. (b) $131\frac{1}{3}$.

6. What is the deflection of a steel bar 1 in. square and 6 ft. long, which supports a load of 100 lb. at the center? Ans. .31104″.

7. Which will be the stronger, a beam whose cross-section is an equilateral triangle, one side measuring 15 in., or one whose cross-section is a square, one side measuring 9 in.? Both beams are of the same length. Ans. The one having the square cross-section.

8. A wooden beam of rectangular cross-section sustains a uniform load of 50 lb. per foot. If the beam is 8″ × 14″ and 16 ft. long, how much more will it deflect when the short side is vertical than when the long side is vertical? Ans. .055417″.

COMPARISON OF STRENGTH AND STIFFNESS OF BEAMS.

1406. Consider two rectangular beams, loaded in the same manner, having the same lengths and bending moments, but different breadths and depths. Then,

$M = S\frac{I}{c} = S\frac{b d^2}{6}$ (1) and $M = S\frac{b_1 d_1^2}{6}$ (2). Dividing (1) by (2), $\frac{M}{M} = \frac{6 S b d^2}{6 S b_1 d_1^2} = \frac{b d^2}{b_1 d_1^2} = 1$, or $b d^2 = b_1 d_1^2$ (3).

Equation 3 shows that, if both beams have the same depth, their strengths will vary directly as their breadths, i. e., if the breadths are increased 2, 3, 4, etc., times, their strengths will also be increased 2, 3, 4, etc., times. It also shows that, if the breadths are the same and the depths are increased, the strengths will vary as the square of the depth, i. e., if the depths are increased 2, 3, 4, etc., times, the strengths will be increased 4, 9, 16, etc., times. Hence, it is always best, when possible, to have the long side of a beam vertical. If the bending moments are the same, but the weights and lengths are different, $M = g\ W\ l$ (1) and $M = g\ W_1\ l_1$ (2), when g denotes the fraction $\frac{1}{2}$, $\frac{1}{4}$, etc., according to the manner in which the ends are secured, and the manner of loading. Dividing (1) by (2) $\frac{M}{M} = \frac{g\ W\ l}{g\ W_1\ l_1}$, or $W\ l = W_1\ l_1$ (3).

Equation 3 shows that if the load W or W_1 be increased, the length l or l_1 must be decreased; consequently, the strength of a beam loaded with a given weight varies inversely as its length, i. e., if the load be increased 2, 3, 4,

etc., times, the length must be shortened 2, 3, 4, etc., times, the breadth and depth remaining the same.

EXAMPLE.—If a simple beam, loaded in the middle, has its breadth and depth reduced one-half, what proportion of the original load could it carry?

SOLUTION.—In the preceding paragraphs, it was shown that the strength varied as the product of the breadth and the square of the depth, or $b_1 d_1^2 = \frac{1}{2} \times (\frac{1}{2})^2 = \frac{1}{8}$. Consequently, the beam can support only $\frac{1}{8}$ of the original load. Had the breadth remained the same, $(\frac{1}{2})^2 = \frac{1}{4}$ of the original load could have been supported. Had the depth remained the same, $\frac{1}{2}$ of the original load could have been supported.

EXAMPLE.—A beam 10 ft. long, loaded in the middle, has a breadth of 4 in. and a depth of 6 in. The length is increased to 12 ft., the breadth to 6 in., and the depth to 8 in.; how many times the original load can it now support?

SOLUTION.—The strength varies directly as the product of the breadth and square of the depth and inversely as the length, or as $\frac{b\,d^2}{l}$. If b, d, and l denote the original sizes, the strength of the two beams will be to each other as $\frac{b_1 d_1^2}{l} : \frac{b\,d^2}{l}$, or as $\frac{6 \times 8^2}{12} : \frac{4 \times 6^2}{10}$; $\frac{6 \times 8^2}{12} = 32$ and $\frac{4 \times 6^2}{10} = 14.4$. $\frac{32}{14.4} = 2\frac{2}{9}$. Consequently, the beam will support a load $2\frac{2}{9}$ times as great as the original beam.

1407. By a process of reasoning similar to that employed above, it can be shown that the maximum deflection of a beam varies inversely as the cube of the depth and directly as the cube of the length. In other words, if the depth be increased 2, 3, 4, etc., times, the deflection will be decreased 8, 27, 64, etc., times; and, if the length be increased 2, 3, 4, etc., times, the deflection will be increased 8, 27, 64, etc., times. Hence, if a beam is required to be very stiff, the length should be made as short and the depth as great as circumstances will permit.

COLUMNS.

1408. When a piece ten or more times as long as its least diameter or side (in general, its least transverse dimension) is subjected to compression, it is called a **column** or **pillar.**

The ordinary rules for compression do not apply to columns, for the reason that when a long piece is loaded beyond a certain amount, it buckles and tends to fail by flexure. This combination of flexure and compression causes the column to break under a load considerably less than that required to merely crush the material. It is likewise evident that the strength of a column is principally dependent upon its diameter, since that part having the least thickness is the part that buckles, or bends. A column free to turn in any direction, having a cross-section of $3'' \times 8''$, is not nearly so strong as one whose cross-section is $4'' \times 6''$. The strength of a very long column varies, practically, inversely as the square of the length; i. e., if a column b is twice as long as a column a, the strength of $b = (\frac{1}{2})^2 = \frac{1}{4}$ the strength of a, the cross-sections being equal.

1409. The conditions of the ends of a column play a very important part in determining their strength, and must always be taken into consideration. In Fig. 336, are shown three classes of columns. The column marked a is used in architecture, while the columns similar to b and c are used in bridge and machine construction.

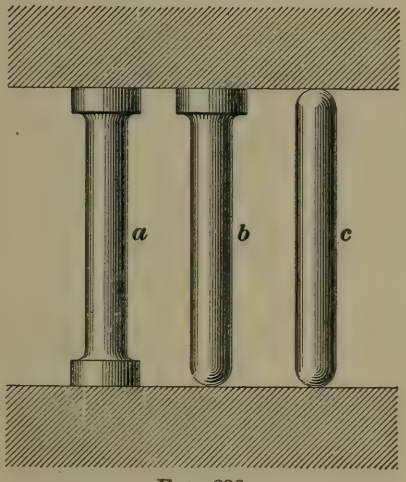

FIG. 336.

According to theory, which is confirmed by experiment, a column having one end flat and the other rounded, like b, is $2\frac{1}{4}$ times as strong as a column having both ends rounded, like c.

One having both ends flat, like a, is 4 times as strong as c, which has both ends rounded, the three columns being of the same length. If the length of c be taken as 1, the length of b may be $1\frac{1}{2}$, and that of a may be 2 for equal strength, the cross-sections all being the same; for, since the strengths vary inversely as the squares of the lengths, the strength of c is to that of b as $1 : \frac{1}{(1\frac{1}{2})^2}$ or as $1 : \frac{4}{9}$. But,

since b is $2\frac{1}{4} = \frac{9}{4}$ times as strong as c, $\frac{4}{9} \times \frac{9}{4} = 1$, or, the length of b being $1\frac{1}{2}$ times that of c, its strength is the same. Similarly, when a is twice as long as c its strength is the same.

1410. Columns like b and c do not actually occur in practice, an eye being formed at the end of the column and a pin inserted, forming what may be termed a *hinged end.* A steam engine connecting-rod is a good example of a column having two hinged ends, and a piston rod of a column having one end hinged and one end flat.

1411. There are numerous formulas for calculating the strength of columns, but the one that gives the most satisfactory results for columns of all lengths is the following:

$$W = \frac{S_2 A}{f\left(1 + \frac{A l^2}{g I}\right)}. \qquad \textbf{(119.)}$$

In this formula, W = load, S_2 = ultimate strength for compression, taken from Table 26, Art. **1357**, A = area of section of a column in square inches, f = factor of safety, l = length in inches, g = constant, to be taken from Table 30, and I = least moment of inertia of the cross-section—that is, the moment of inertia about an axis passing through the center of gravity of the cross-section and parallel to the longest side. In other words, if the column has a rectangular cross-section, whose longer side is b and shorter side d, the least moment of inertia is $\frac{b d^3}{12}$, the axis in this case being parallel to the long sides b. The values of g are given in the following table:

TABLE 30.

Material.	Both Ends Fixed.	One End Hinged.	Both Ends Hinged.
Timber	3,000	1,690	750
Cast Iron	5,000	2,810	1,250
Wrought Iron	36,000	20,250	9,000
Steel	25,000	14,060	6,250

EXAMPLE.—The section of a hollow rectangular cast-iron column has the following dimensions (see Table of Moments of Inertia): $d = 8''$, $d_2 = 6''$, $b = 6''$, and $b_2 = 3\frac{1}{2}''$. If the length is 10 feet and the ends are fixed, what steady load will the column sustain with safety?

SOLUTION.—From the Table of Moments of Inertia, least $I = \frac{1}{12}(d\,b^3 - d_1\,b_1^3) = \frac{8 \times 6^3 - 6 \times 3.5^3}{12} = 122.5625$. $A = b\,d - b_1\,d_1 = 6 \times 8 - 3.5 \times 6 = 27$ sq. in. $S_2 = 90{,}000$, $f = 6$, $l = 10 \times 12 = 120''$, and $g = 5{,}000$. Therefore, $W = \dfrac{90{,}000 \times 27}{6\left(1 + \dfrac{27 \times 120^2}{5{,}000 \times 122.5625}\right)} = \dfrac{2{,}430{,}000}{9.806} = 247{,}800$ lb., nearly. Ans.

Had the column been less than $10 \times 6 = 60$ in. $= 5$ ft. long, the safe load would have been $\dfrac{90{,}000 \times 27}{6} = 405{,}000$ lb. Had it been twice as long, it would have supported a safe load of only $\dfrac{90{,}000 \times 27}{6\left(1 + \dfrac{27 \times 240^2}{5{,}000 \times 122.5625}\right)} = 114{,}500$ lb., nearly.

1412. In the actual designing of a column, the size of the cross-section is not known, but the form (square, round, etc.) is known, also the length, material, condition of ends and load it is to carry. To find the size of the cross-section, substitute $\frac{S_2}{f}$ in formula **108,** for S, and solve for A, obtaining $A = \frac{Pf}{S_2}$. Substituting in this equation the values of $P(= W)$, f, and S_2, this gives the value of A for a short piece less than 10 times the length of the shortest side, or diameter. Assume a value of A somewhat larger than that just found, and dimension a cross-section of the form chosen so that its area shall equal that assumed. Calculate the moment of inertia and substitute the values of W, A, I, l, and g in formula **119,** and solve for $\frac{S_2}{f}$. If the result last found equals the value of $\frac{S_2}{f}$ taken from Tables 26 and 28, the assumed dimensions are correct; if larger, the assumed dimensions must be increased; if smaller, they should be

diminished, and in both cases the value of $\frac{S_2}{f}$ should be recalculated. An example will serve to illustrate the process.

EXAMPLE.—What should be the diameter of a steel piston rod 5 feet long, the diameter of the piston being 18 inches and the greatest pressure 130 pounds per square inch?

SOLUTION.—S_2 for this case = 150,000 lb. Since the piston rod is liable to shocks, a factor of safety of 10 should be used; hence, $\frac{S_2}{f} = \frac{150,000}{10} = 15,000$ lb. The load $W = 18^2 \times .7854 \times 130 = 33,081$ lb. $A = \frac{Pf}{S_2} = \frac{33,081}{15,000} = 2.2$ sq. in., nearly.

Assume that 3 sq. in. are needed. The diameter of a circle corresponding to an area of 3 sq. in. is $\sqrt{\frac{3}{.7854}} = 1.9544''$. Assume the diameter to be $1\frac{15}{16}'' = 1.9375$; the area will be $1.9375^2 \times .7854 = 2.9483$ sq. in. The value of $I = \frac{\pi d^4}{64} = \frac{3.1416 \times (1\frac{15}{16})^4}{64} = .69173$. $W = \frac{S_2 A}{f\left(1 + \frac{A l^2}{g I}\right)}$.

Consequently, $\frac{S_2}{f} = \frac{W}{A}\left(1 + \frac{A l^2}{g I}\right) = \frac{33,081}{2.9483}\left(1 + \frac{2.9483 \times (5 \times 12)^2}{14,060 \times .69173}\right) = 23,465$ lb.

As this value exceeds 15,000 lb., the diameter of the rod must be increased. Trying $2\frac{1}{8}''$ as the diameter, the area is 3.5466 sq. in., and $I = 1.00093$. Substituting these values as before, $\frac{S^2}{f} = \frac{33,081}{3.5466}\left(1 + \frac{3.5466 \times 60^2}{14,060 \times 1.00093}\right) = 17,790$ lb. This is still too large; hence, trying $2\frac{1}{4}''$, the area = 3.976 sq. in. $I = 1.258$ and

$$\frac{S_2}{f} = \frac{33,081}{3.976}\left(1 + \frac{3.976 \times 60^2}{14,060 \times 1.258}\right) = 15,052 \text{ lb.}$$

Consequently, the diameter should be $2\frac{1}{4}''$.

EXAMPLES FOR PRACTICE.

1. What safe steady load will a hollow cylindrical cast-iron column support, which is 14 feet long, outside diameter 10 inches, inside diameter 8 inches, and which has flat ends? Ans. 273,500 lb.

2. A hollow wooden column having a square cross-section is to support a steady load of 15,155 pounds. If the thickness of the side is $1\frac{1}{2}$ inches, length of column 20 feet, and the ends flat, what should be the length of the sides of the cross-section, outside and inside?

Ans. Outside, 9″; inside, 6″.

3. Suppose a wrought-iron connecting-rod to have a rectangular cross-section of uniform size throughout its length. If the diameter of the steam cylinder is 40 inches, steam pressure 110 pounds per square inch, and the length of the rod is $12\frac{1}{2}$ feet, what should be the dimensions of the cross-section of the rod? Ans. $5\frac{1}{2}'' \times 9''$.

1413. The preceding method for determining the dimensions of the cross-section, when the load and length are given, is perfectly general, and can, therefore, be used in every case. It is, however, somewhat long and cumbersome. For the special cases of square, circular, and rectangular columns, the following formulas may be applied, if preferred. They seem complicated, but, when substitutions are made for the quantities given, the formulas will be found of relatively easy application.

For square columns, the side c of the square is given by the formula

$$c = \sqrt{\frac{Wf}{2S_2} + \sqrt{\frac{Wf}{S_2}\left(\frac{Wf}{4S_2} + \frac{12l^2}{g}\right)}}. \qquad \textbf{(120.)}$$

For circular columns, the diameter d of the circle is given by the formula

$$d = 1.4142\sqrt{\frac{.3183\ Wf}{S_2} + \sqrt{\frac{.3183\ Wf}{S_2}\left(\frac{.3183\ Wf}{S_2} + \frac{16\ l^2}{g}\right)}}. \qquad \textbf{(121.)}$$

For rectangular columns, assume the shorter dimension (depth $= d$). Then the longer dimension (breadth $= b$) is given by the formula

$$b = \frac{Wf\left(1 + \frac{12\ l^2}{d^2\ g}\right)}{d\ S_2}. \qquad \textbf{(122.)}$$

Should the dimensions given by the last formula be too much out of proportion, a new value may be assumed for d, and a new value found for b.

EXAMPLE.—Required the section of a square timber pillar to stand a steady load of 20 tons, the length of the column being 30 feet, and its ends both flat.

SOLUTION.—Here $S_2 = 8{,}000$ lb., $f = 8$, $g = 3{,}000$, $W = 40{,}000$ lb., $l = 30 \times 12 = 360$ in. These values, substituted in formula **120**, give

$$c = \sqrt{\frac{40{,}000 \times 8}{2 \times 8{,}000} + \sqrt{\frac{40{,}000 \times 8}{8{,}000}\left(\frac{40{,}000 \times 8}{4 \times 8{,}000} + \frac{12 \times 360^2}{3{,}000}\right)}}$$

$$= \sqrt{20 + \sqrt{40\left(10 + \frac{4 \times 36^2}{10}\right)}}$$

$$= \sqrt{20 + \sqrt{21{,}136}} = \sqrt{20 + 145.35}$$

$$= \sqrt{165.35} = 12.90 = 12\tfrac{7}{8}'', \text{ nearly, or say } 13''.$$

EXAMPLE.—Let it be required to solve the problem worked out by the general method in Art. **1412.**

SOLUTION.—Here $S_2 = 150{,}000$ lb., $f = 10$, $g = 14{,}060$, $W = 33{,}000$ lb., nearly, and $l = 5 \times 12 = 60$ in. From these data we have

$$\frac{.3183\,Wf}{S_2} = \frac{.3183 \times 33{,}000 \times 10}{150{,}000} = \frac{.3183 \times 11}{5} = .7003,$$

$$\frac{16\,l^2}{g} = \frac{16 \times 60^2}{14{,}060} = \frac{8 \times 360}{703} = 4.0967.$$

Then, formula **121**,

$$d = 1.4142\sqrt{.7003 + \sqrt{.7003 \times 4.7970}}$$

$$= 1.4142\sqrt{.7003 + \sqrt{3.3593}} = 1.4142\sqrt{.7003 + 1.8328}$$

$$= 1.4142 \times 1.5916 = 2.25 = 2\tfrac{1}{4}'',$$

as found by the general or trial method.

The student may apply formula **122** to the solution of example 3 in the preceding article.

TORSION AND SHAFTS.

1414. When a force is applied to a beam in such a manner that it tends to twist it, the stress thus produced is termed **torsion.** In Fig. 337, $b\,c$ represents a beam fixed at one end; a load W is applied at the end of a lever arm $o\,n$, which twists the beam. If a straight line $c\,b$ is drawn parallel to the axis before the load is applied, it will be found, after the weight W has been hung from n, that the line $c\,b$ will take a position $c\,a$, forming a spiral. If the load

does not strain the material beyond its elastic limit, $c\ a$ will return to its original position $c\ b$ when W is removed. It will also be found that the angles $a\ c\ b$ and $a\ o\ b$ are directly proportional to the loads.

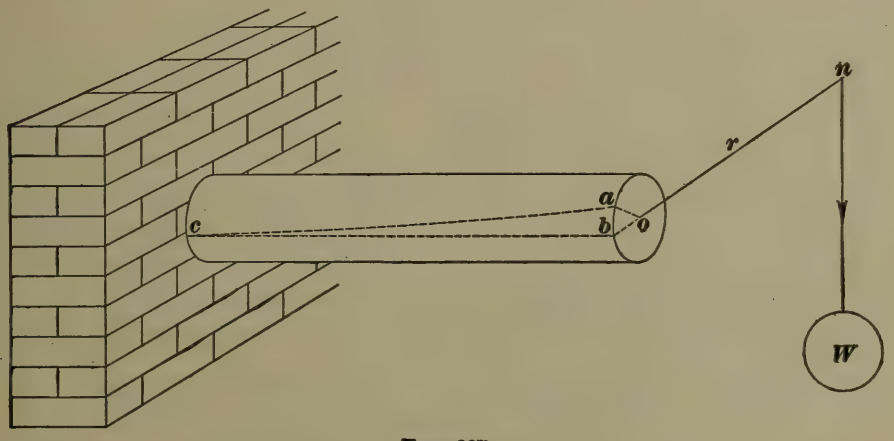

FIG. 337.

Torsion manifests itself in the case of rotating shafts. Instead of one end being fixed, as in the previous case, the reisistance which the shaft has to overcome takes the place of the force which before was necessary for fixing one end. Should the shaft be too small, the resistance will overcome the strength of the material and rupture it.

1415. The angle $a\ o\ b$, which may be called the angle of twist, plays an important part in the designing of shafts. For all solid shafts below 11 inches in diameter, the following formula may be used:

$$d = c\sqrt[4]{Pr} = c_1\sqrt[4]{\frac{H}{N}}, \qquad \textbf{(123.)}$$

in which d = diameter of round shaft or the side of a square shaft in inches; c = constant from Table 31; P = force or weight applied to the end of the lever arm, in pounds; r = length of lever arm in inches, from center of shaft to point of application of P; c_1 = constant from same table; H = horsepower transmitted, and N = number of revolutions per minute.

TABLE 31.

Material.	c.		c_1.	
	Round.	Square.	Round.	Square.
Wrought Iron.....	.31	.272	4.92	4.31
Cast Iron	.353	.309	5.59	4.89
Steel	.297	.26	4.7	4.11

EXAMPLE.—What should be the diameter of a wrought-iron crank shaft for a 16″ × 20″ steam engine, if the greatest steam pressure is to be 90 lb. per sq. in. ? (Assume that the entire steam pressure is transmitted through the crank-pin at some point of the stroke).

SOLUTION.—Total pressure on piston $= 16^2 \times .7854 \times 90 = 18{,}095.616$, say 18,000 lb. $= P$ in formula **123**. $r = \frac{20}{2} = 10''$. Therefore,

$$d = c\sqrt[4]{Pr} = .31\sqrt[4]{18{,}000 \times 10} = 6.385''.$$

A $6\frac{3}{8}''$ shaft would be sufficiently large.

EXAMPLE.—What horsepower could be safely transmitted by a 7-inch cast iron square shaft making 80 revolutions per minute ?

SOLUTION.—Formula **123** gives, $d = c_1\sqrt[4]{\frac{H}{N}}$, or $H = \frac{Nd^4}{c_1^4} = \frac{80 \times 7^4}{4.89^4}$ = 335.93, say 336 horsepower.

1416. If the diameter of a wrought-iron shaft is greater than 12.4 inches, of a cast-iron shaft greater than 10.3 inches, or of a steel shaft greater than 13.6 inches, the following formula should be used:

$$d = k\sqrt[3]{Pr} = k_1\sqrt[3]{\frac{H}{N}}, \qquad \textbf{(124.)}$$

k and k_1 being taken from Table 32. If the shaft is hollow (round), either of the two following formulas may be used:

$$P = q\left(\frac{d_1^4 - d_2^4}{d_1 r}\right), \qquad \textbf{(125.)}$$

or

$$H = q_1 N\left(\frac{d_1^4 - d_2^4}{d_1}\right), \qquad \textbf{(126.)}$$

d_1 and d_2 being the outside and inside diameters respectively and q and q_1 constants to be taken from Table 32.

TABLE 32.

Material.	k	k_1	q	q_1
Wrought Iron.....	.0909	3.62	1,335	.0212
Cast Iron.....	.1145	4.56	669	.0106
Steel	.0828	3.3	1,767	.028

EXAMPLE.—What horsepower can be safely transmitted by a hollow wrought-iron shaft making 60 revolutions per minute, and whose diameters are $9\frac{1}{2}$ and 12 inches?

SOLUTION.—

$$H = q_1 N\left(\frac{d_1^4 - d_2^4}{d_1}\right) = .0212 \times 60\left(\frac{12^4 - 9.5^4}{12}\right) = 1{,}334.65 \text{ H.P.}$$

EXAMPLES FOR PRACTICE.

1. What should be the diameter of a steel shaft to transmit 500 horsepower at 200 revolutions per minute? Ans. 5.91″, say $5\frac{15}{16}$″.

2. How many horsepower will an 8″ round wrought-iron shaft transmit with safety, running at 150 R. P. M.? Ans. 1,048.5 H.P.

3. A hollow cast-iron shaft has an outside diameter of 10 inches and an inside diameter of 6 inches; at what speed should it be run to transmit 750 horsepower? Ans. 81.29 R. P. M.

4. A wrought-iron shaft 4 inches square runs at 110 revolutions per minute; what horsepower will it safely transmit? Ans. 81.6 H.P.

5. What should be the diameter of a wrought-iron shaft to transmit 6,000 horsepower at 100 revolutions per minute?

Ans. 14.172″, say $14\frac{3}{16}$″.

ROPES.

1417. The strength of hemp and manila ropes varies greatly, depending not so much upon the material and area of cross-section as upon the method of manufacture and the amount of twisting.

Hemp ropes are about 25% to 30% stronger than manila ropes or tarred hemp ropes. Ropes laid with tar wear better than those laid without tar, but their strength and flexibility are greatly reduced. For most purposes, the following formula may be used for the safe working load of any of the three ropes mentioned above:

$$P = 100\, C^2, \qquad \textbf{(127.)}$$

in which P = working load in pounds and C = circumference of rope in inches. This formula gives a factor of safety of from $7\frac{1}{2}$ for manila or tarred hemp rope to about 11 for best three strand hemp rope. When excessive wear is likely to occur, it is better to make the circumference of the rope considerably larger than that given by the formula.

1418. Wire rope is made by twisting a number of wires (usually 19) together into a strand and then twisting several strands (usually 7) together to form the rope. It is very much stronger than hemp rope, and may be much smaller in size to carry the same load.

For iron wire rope of 7 strands, 19 wires to the strand, the following formula may be used, the letters having the same meaning as in formula **127**:

$$P = 600\ C^2. \qquad \textbf{(128.)}$$

Steel wire ropes should be made of the best quality of steel wire; when so made they are superior to the best iron wire ropes. If made from an inferior quality of steel wire, the ropes are not as good as the better class of iron wire ropes. When substituting steel for iron ropes, the object in view should be to gain an increase of wear rather than to reduce the size. The following formula may be used in computing the size or working strength of the best steel wire rope, 7 strands, 19 wires to the strand:

$$P = 1{,}000\ C^2. \qquad \textbf{(129.)}$$

Formulas **128** and **129** are based on a factor of safety of 6.

1419. When using ropes for the purpose of raising loads to a considerable height, the weight of the rope itself must also be considered and added to the load. The weight of the rope per running foot, for different sizes, may be obtained from the manufacturer's catalogue.

EXAMPLE.—What should be the allowable working load of an iron wire rope whose circumference is $6\frac{3}{4}$ inches? Weight of rope not to be considered.

SOLUTION.—Using formula **128**,

$$P = 600 \times (6\tfrac{3}{4})^2 = 27{,}337.5 \text{ lb.}$$

EXAMPLE.—The working load, including weight, of a hemp rope is to be 900 pounds; what should be its circumference?

SOLUTION.—Using formula **127**,

$$C = \sqrt{\frac{P}{100}} = \sqrt{\frac{900}{100}} = 3''.$$

1420. In measuring ropes, the circumference is used instead of the diameter, because the ropes are not round and the circumference is not equal to 3.1416 times the diameter. For three strands the circumference is about 2.86 d, for seven strands about 3 d, d being the diameter.

CHAINS.

1421. The size of a chain is always specified by giving the diameter of the iron from which the link is made. The two kinds of chain most generally used are the **open link** chain and the **stud link** chain. The former is shown by (a), Fig. 338, and the latter by (b). The stud prevents the two sides of a link from coming together when under a heavy pull, and thus strengthens the chain.

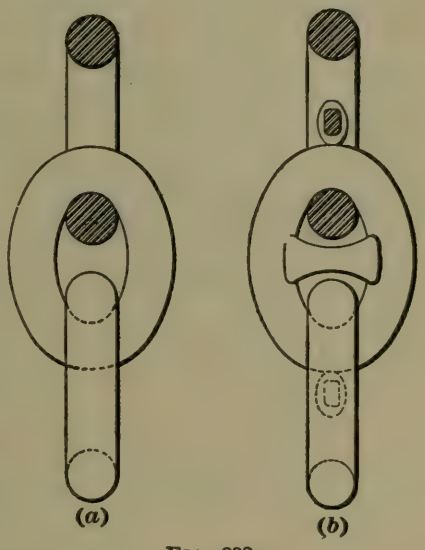

FIG. 338.

It is a good practice to anneal old chains which have become brittle by overstraining. This renders them less liable to snap from sudden jerks. The annealing process reduces their tensile strength, but increases their toughness and ductility, two qualities which are sometimes more important than mere strength.

Let P = safe load in pounds;

d = diameter of link in inches.

Then, for open link chains, made from a good quality of wrought iron,

$$P = 12{,}000\ d^2, \qquad \textbf{(130.)}$$

and, for stud link chains,

$$P = 18{,}000\ d^2. \qquad \textbf{(131.)}$$

EXAMPLE.—What load will be safely sustained by a $\frac{3}{4}$-inch open link chain?

SOLUTION.—Using formula **130**,

$$P = 12{,}000\ d^2 = 12{,}000 \times (\tfrac{3}{4})^2 = 6{,}750 \text{ lb.}$$

EXAMPLE.—What must be the diameter of a stud link chain to carry a load of 28,125 pounds?

SOLUTION.—Using formula **131**, $P = 18{,}000\ d^2$. Hence,

$$d = \sqrt{\frac{P}{18{,}000}} = \sqrt{\frac{28{,}125}{18{,}000}} = 1\tfrac{1}{4}''.$$

1421*a*. The statement in the last sentence of Art. **1358** may be modified in practice to include pieces whose lengths are not greater than *ten* times their least transverse dimensions, without material error. Although the stress is pure compression only for pieces whose lengths do not exceed *five* times their least transverse dimensions, the results obtained by formula **119** agree so closely with those obtained by formula **110**, when the length does not exceed ten times the least transverse dimension, that the latter may be used in all such cases. When the length is greater than ten times the least transverse dimension, the piece becomes a column, and formula **119** must be used.

APPLIED MECHANICS.

1422. A **machine** is an assemblage of moving parts, together with a supporting frame so arranged as to utilize some external source of energy for the purpose of doing work.

In the operation of machinery, motion and force are communicated to one of the moving parts, and transmitted to the part where the work is done. During the transmission, both the motion and force are modified in direction and amount, so as to be rendered suitable for the purpose to which they are to be applied.

The moving parts are arranged to have certain definite motions relative to each other, the effect of which is to compel the piece where the work is done to have the required motion. The nature of these movements is independent of the amount of force transmitted; in other words, in a model of a machine, operated by hand, the relative motions of the parts will be precisely the same as in the machine itself, although, in the latter case, a great amount of power may be transmitted and much work done.

1423. **Kinematics** is that branch of Applied Mechanics which treats of the motions of the parts of a machine, without regard to the forces acting.

1424. The **dynamics of machinery** is that branch which treats of the forces acting in the operation of machinery. The dynamics of machinery depends upon the subject of Kinematics, since every change in force in a machine is the result of a change in motion. Thus, in the steam engine, if the motion of the piston be transmitted and modified so as to cause the periphery of the fly-wheel to move eight times as fast as the piston, the force exerted upon the belt would be only one-eighth of the steam pressure upon the piston.

For notice of copyright, see page immediately following the title page.

In what follows, Kinematics will be treated of mainly, though in some cases the forces acting will be considered.

1425. Mechanism is a term applied to three or more parts of a machine, so combined that the motion of the first compels the motion of the other movable parts, according to the law depending upon the nature of the combination.

The terms *mechanical movement* and *mechanical motion* are often used as having the same meaning as *mechanism*. A machine is made up of a number of mechanisms.

1426. Driver and Follower.—That piece of a mechanism which causes motion is called the **driver,** and the one whose motion is effected is called the **follower.** In the case of belt or toothed gearing, the follower is often called the *driven* wheel.

1427. Right-handed rotation is rotation in the direction of the motion of the hands of a watch. **Left-handed rotation** is in the opposite direction Looking at a rotating pulley from one side, its rotation would be right-handed, if it turned in the same direction as the hands of a watch, held and looked at by the observer. Viewing the pulley from the other side, its rotation would be left-handed.

1428. Cycle of Motions.—When a mechanism is set in motion, and its parts go through a series of movements, which are repeated over and over in the same order, each series is called a **cycle of motions.**

1429. Velocity ratio is a term used to signify the comparative velocities of two pieces. Thus, if two gear wheels are so proportioned that one turns three times as fast as the other, their velocity ratio would be 3 or $\frac{1}{3}$, according as the more rapidly revolving gear was mentioned first or last.

LINK MECHANISMS.

1430. A bar, or other rigid body, connecting two elements or parts of a mechanism, is termed a **link.** In the steam engine, the crank and connecting-rod are links, and the engine frame may be considered to be a third or closing

link, one end of which supports the crank-shaft, the other end being slotted to guide the cross-head.

Links have special names, according to the machine or location in which they are used. Thus, a link which vibrates about a point is called a **beam, rocker,** or **lever,** and one which turns completely around a point is called a **crank.** A link connecting with an oscillating, or rotating, link is called by various names, as **connecting-rod, crank-rod, pitman, eccentric-rod, coupling-rod, parallel-rod,** etc. In practice, the word "link" is applied mainly to *slotted* links, such as the link in "Stephenson's link motion."

In what follows, when speaking of the length of a link, the distance between centers will be understood, or the distance A, in Fig. 339.

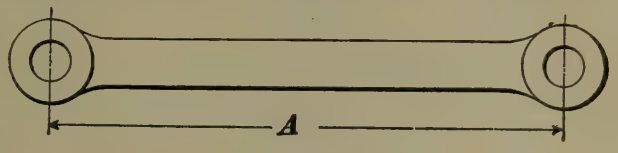

FIG. 339.

1431. The **center line of motion** of any mechanism is a straight line so drawn as to represent the general or mean direction in which one or more of the parts move. When the motion of the parts is not in a straight line, their deviation occurs equally on each side of this center line. Thus, in the steam engine, the center line of motion runs from the center of the cylinder to the center of the shaft, the connecting-rod vibrating equally on each side of the line.

1432. Levers.—Levers are used in mechanisms to guide a moving point, as the end of a moving rod, or to transfer motion from one line to another. There are three cases: (I) Levers whose lines of motion are parallel; (II) levers whose lines of motion intersect, and (III) levers having arms whose center lines do not lie in the same plane.

In proportioning levers, the following points should in general be observed. They apply to all three cases just mentioned:

(1.) When in mid position, the center lines of the arms should be perpendicular to the lines along which they give

or take their motions, so that the lever will vibrate equally each way.

(2.) If a vibrating link is connected to the lever, its point of attachment should be so located as to move equally on each side of the center line of motion of the link.

(3.) The lengths of the lever arms must be proportional to the distances through which they are to vibrate.

1433. Case I.—Reversing Levers.—An example of a lever which illustrates the foregoing principles is shown in Fig. 340. The crank $R\ S$ is the driver, and gives a

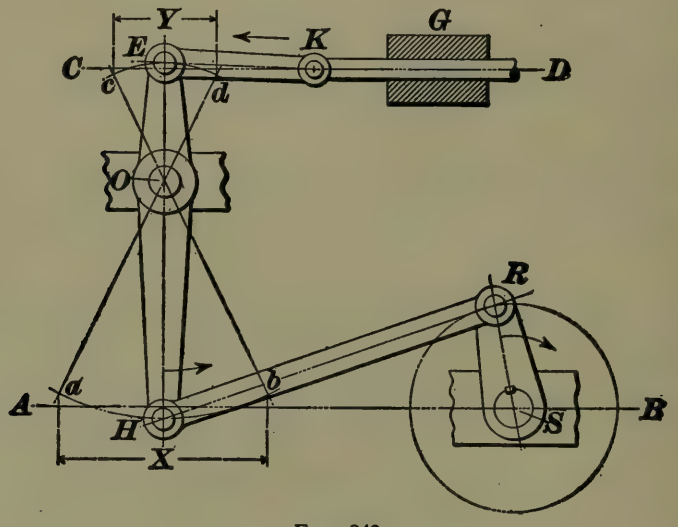

FIG. 340.

motion along the center line $A\ B$, which is transferred by the lever $E\ H$ to the line $C\ D$. The lever vibrates equally each way about its fulcrum or center O, as indicated by the lines $c\ b$ and $d\ a$. When in mid position, its center line $E\ H$ is perpendicular to the lines of motion $C\ D$ and $A\ B$. The horizontal distances traversed by points E and H, respectively, are proportional to the arms $E\ O$ and $H\ O$, or $Y : E\ O = X : H\ O$. The vibrating link $E\ K$ connects the point E with the rod $K\ D$, which is constrained to move in a straight line by the guide G, and in accordance with principle 2, the lever is so proportioned that point E will be as far above the center line of motion $C\ D$, when in mid position, as it will be below it in the two extreme positions;

that is, points c and d are as far below the line as point E is above it.

At the bottom of the lever, where the rod $H\,R$ connects with the crank, the same principle holds, point H being as far below the line $A\,B$ as points a and b are above it.

Frequently, the distance between the center lines $C\,D$ and $A\,B$ is given, and the extent of the motion along these lines, from which to proportion the lever. A correct solution to this problem is troublesome by calculation, because it is not known at the start how far above and below their respective lines of motion the points E and H should be.

1434. It may easily be done graphically, however, as shown in Fig. 341. Draw the center lines of motion $C\,D$ and $A\,B$ and a center line $S\,T$ perpendicular to them. Draw $M\,E$ parallel to $S\,T$ at a distance from it equal to $\frac{1}{2}\,Y$, or half the stroke along $C\,D$; also, the parallel line $H\,N$, on the other side of $S\,T$, and at a distance from it equal to $\frac{1}{2}\,X$, or half the stroke along $A\,B$. Connect points M and N by a straight line; where this line intersects $S\,T$, as at O, will be the center or fulcrum of the lever. With O as a center, find by trial the radius of an arc which will cut $S\,T$ as far below the line $A\,B$ as it does $H\,N$ above this line, or so that the distance m will equal the distance n. As an aid in determining the correct radius, describe an arc cutting $S\,T$, with O as a center and a radius $O\,N$. The

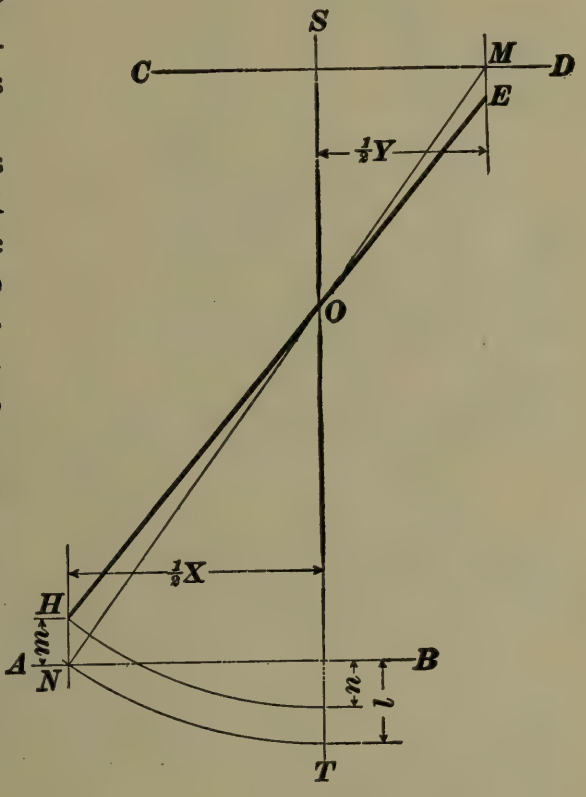

FIG. 341.

distance n will be a little more than $\frac{1}{2}\ l$. Now, draw a straight line through points H and O. The part included between $H\ N$ and $M\ E$ determines the length of the lever. In this case, the length of the shorter arm is equal to $O\ E$, and of the longer arm, $O\ H$.

1435. Non-Reversing Levers.—Fig. 342 shows the same construction applied to a lever in which the center O is at one end of the lever. This lever does not reverse the motion like the previous one, since when the motion along $A\ B$ is to the right or left, the motion along $C\ D$ will be in the same direction. The figure is lettered like the preceding one, so that the construction will be easily understood.

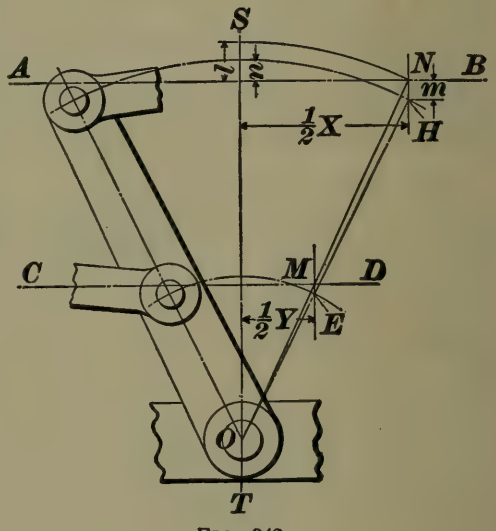

FIG. 342.

1436. It is often desirable that a lever mechanism shall reproduce upon a greater or smaller scale, along one line, the exact motion that occurs along another line; that is, that every change in the rate of the motion along one line shall reproduce a corresponding change along the other line. Figs. 343 and 344 illustrate three indicator-reducing motions that accomplish this.

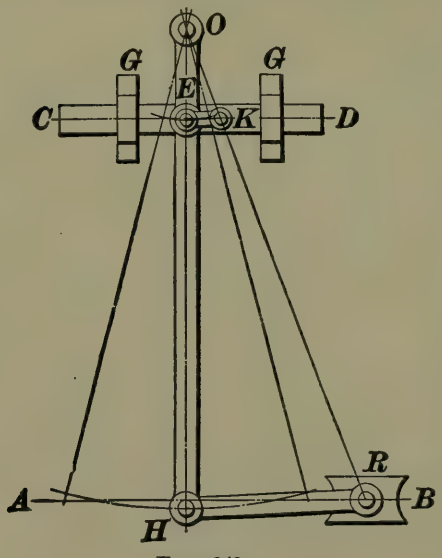

FIG. 343.

In Fig. 343 the lower end of the lever attaches to the cross-head of the engine through the swinging link $H\ R$. The indicator string is fastened to the bar $C\ D$, which receives its motion from the lever through

the link $E\,K$, and slides through the guides G, G, in a direction parallel to the line of motion $A\ B$ of the cross-head. In order that the bar $C\,D$ shall have the same kind of motion

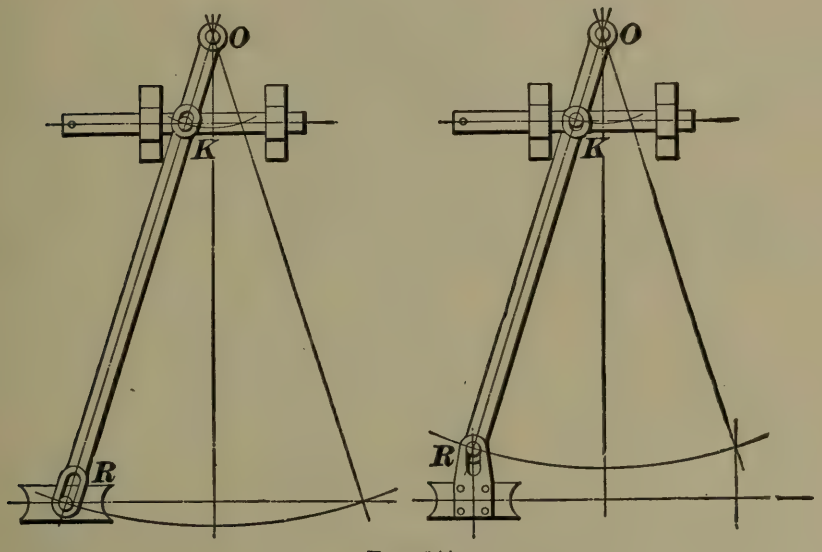

FIG. 344.

as the cross-head, it is only necessary that the links $E\ K$ and $H\,R$ shall be proportional to their respective lever arms; thus $O\,H : H\,R = O\,E : E\,K$. The pins must be so placed that the connecting links will be parallel; if parallel at one point of the stroke, they will be so at all points.

1437. It is to be observed that the pins O, K, and R are in one straight line, and, in general, it may be said that any arrangement of the lever which will keep these three pins in a straight line for all points of the stroke will be a correct one. In Fig. 344 are two such arrangements. In the first, the pins K and R are fast to the slide and cross-head, respectively, and slide in slots in the lever. In the second, they are fast to the lever, the slots being in the cross-head and slide. In both, the pins K and R are in a straight line with the pin O during the whole stroke.

1438. Case II.—Bell-Crank Levers.—Levers whose lines of motion intersect are termed **bell-crank** levers.

In Fig. 345, suppose the angle $C\,A\,B$, made by the lines

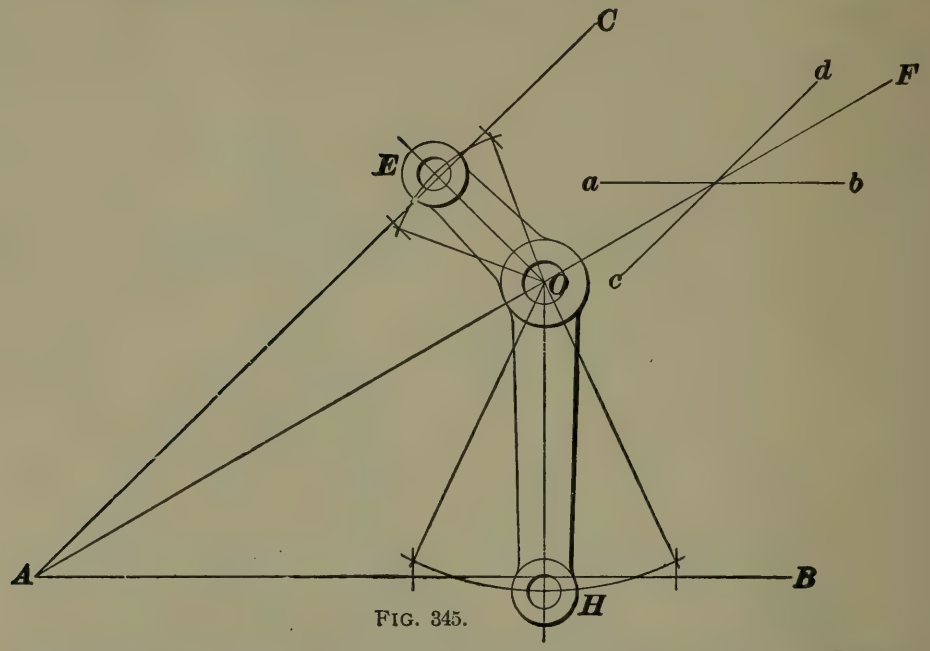

FIG. 345.

of motion, to be given, and that the motion along $A\,B$ is to be twice that along $A\,C$. Draw $c\,d$ parallel to $A\,C$ at any

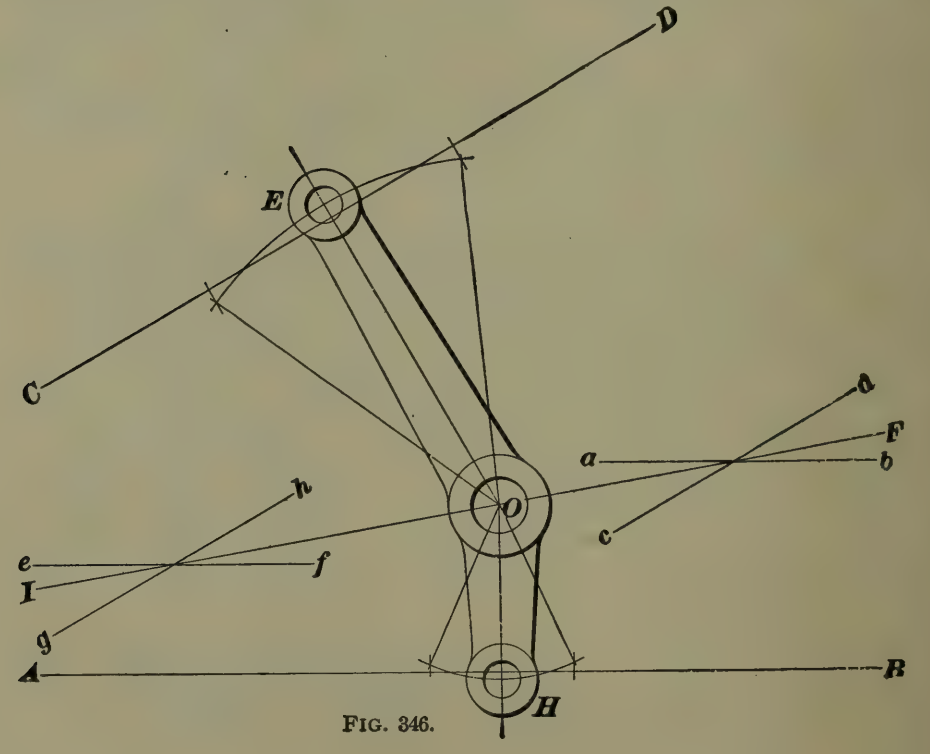

FIG. 346.

convenient distance from $A\ C$. Draw $a\ b$ parallel to $A\ B$ and at a distance from $A\ B$ equal to twice the distance of $c\ d$ from $A\ C$. Through the intersection of these two lines and the apex A of the angle, draw the line $A\ F$. Then the center O of the bell-crank may be taken at any point on $A\ F$ suited to the design of the machine. Having chosen point O, draw the perpendiculars $O\ E$ and $O\ H$, which will be the center lines of the lever arms.

1439. In Fig. 346 a construction is shown that may be employed when the two lines $C\ D$ and $A\ B$ do not intersect

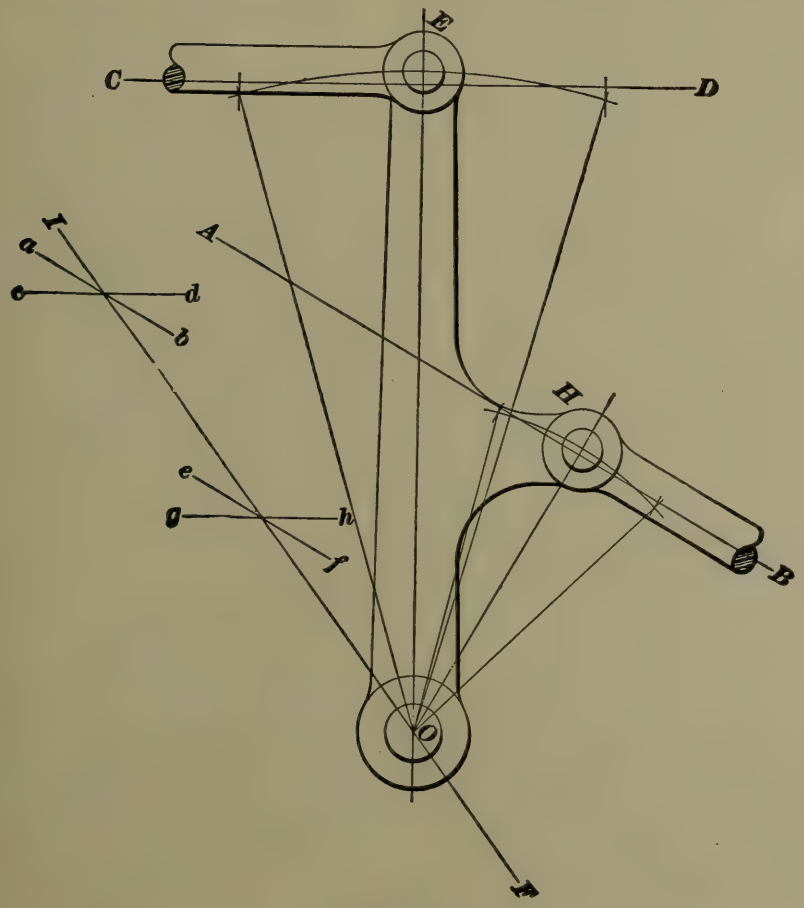

FIG. 347.

within the limits of the drawing. In Fig. 347 the same construction is applied to a non-reversing lever, in which the center O falls outside of the lines $A\ B$ and $C\ D$. The figures

are lettered alike, and the following explanation applies to either: Draw $c\ d$ parallel to $C\ D$, and $a\ b$ parallel to $A\ B$, as before, so that the distance of $c\ d$ from $C\ D$: distance of $a\ b$ from $A\ B$ = amount of motion along $C\ D$: amount of motion along $A\ B$. Again, draw lines $g\ h$ and $e\ f$ in exactly the same way, but taking care to get their distances from $C\ D$ and $A\ B$ different from those of the lines just drawn. Thus, if $c\ d$ should be six inches from $C\ D$, make $g\ h$ some other distance, as four inches, or eight inches, and then draw $e\ f$ at a proportionate distance from $A\ B$. Through the intersections of $a\ b$ with $c\ d$, and of $e\ f$ with $g\ h$, draw the line $I\ F$, which will be the line of centers for the fulcrum O.

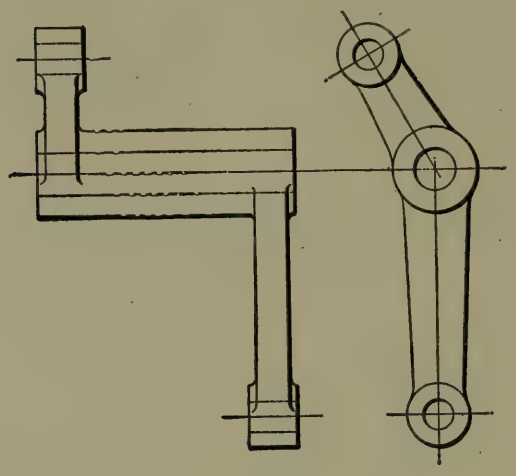

FIG. 348.

1440. Case III.—Levers falling under this case are usually bell-crank levers, with their arms separated by a long hub, so as to lie in different planes. They introduce no new principle. See Fig. 348.

1441. Crank and Connecting-Rod.—Fig. 349 is a diagram of the crank mechanism used in steam engines,

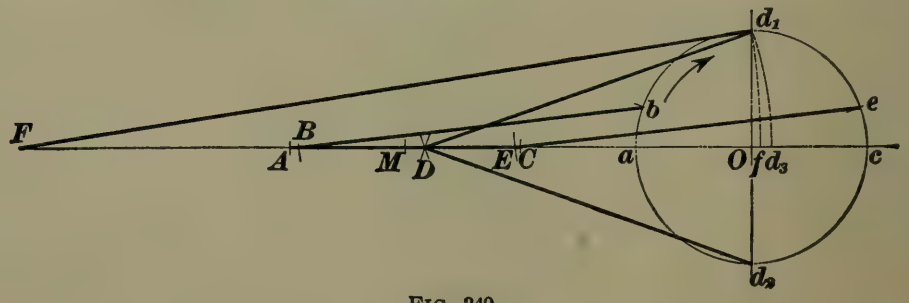

FIG. 349.

power pumps, etc. $A\ C$ represents the stroke of the cross-head, O the center of the crank-shaft, and $a\ d_1\ c\ d_2$ the path described by the crank-pin, called the crank-pin circle.

In the crank motion, the relative positions of the cross-head and crank-pin vary at every point of the stroke. This irregularity, which has an important influence in the design of steam-engine valve gears, may readily be observed by plotting a few points of the motion. Having drawn the crank-pin circle and the center line of motion $A\ c$, set the compasses to a radius equal to the length of the connecting-rod, which, in this case, is three times the length of the crank, or $3 \times O\ a$. With a as a center, strike an arc at A, and with c as a center, an arc at C. $A\ C$ equals the length of the stroke of the cross-head, A and C being the extreme positions of the stroke. The corresponding positions a and c of the crank-pin are known as the **dead points** or **dead centers,** because the crank can not be started at these points by a direct pressure on the connecting-rod.

With some point near a on the crank-pin circle, as b, for a center, and with the same radius as before, strike arc B on the stroke line. Mark point e on the crank-pin circle, so that arc $e\ c = b\ a$; with e as a center, and with the same radius, strike arc E. It will be seen that the distance $E\ C$ is less than $A\ B$, which shows that the relative motion during the first half stroke is different from that during the second half. The reason for this is that one-half the crank-pin circle curves *towards* the cross-head, and the other half *away* from it.

The greatest irregularity occurs when the crank is in its middle positions, or at points d_1 and d_2. With either point as a center, strike an arc, as before, which will fall at D, a distance equal to $M\ D$ from the mid-stroke position of the cross-head. Suppose, the crank to turn in the direction of the arrow, the cross-head will have *passed* mid position M, when the crank-pin reaches its middle point at d_1; on the return stroke the reverse will be true, the crank-pin reaching point d_2 *before* the cross-head reaches M. Hence, during the forward stroke, the cross-head *moves ahead* of the crank; on the return stroke, the cross-head *lags behind* the crank.

The common way of plotting the motion is as follows: Take for example, the point d_1. With d_1 as a center, strike the arc at D, as before; with D as a center and same radius, describe arc $d_1\ d_3$. $O\ d_3$ is the displacement of the cross-head from mid stroke. Point f was obtained in the same way by increasing the length of the connecting-rod to $F\ d_1$, *showing that the longer the connecting-rod, the less the irregularity.*

1442. Crank and Slotted Cross-Head.—If the connecting-rod in Fig. 349 be increased to a very great length, an arc drawn through d_1, corresponding to the arcs $d_1\ d_3$, and $d_1\ f$, would be nearly a straight line coinciding with $d_1\ O$, and the horizontal movement of the crank-pin would, therefore, be practically the same as that of the cross-head. If the connecting-rod were increased to an *infinite* length, the two movements would be exactly the same. Fig. 350 shows the crank and slotted cross-head mechanism by which this

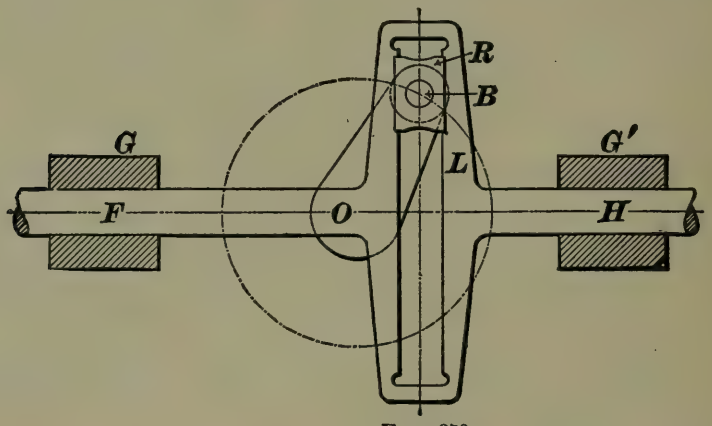

FIG. 350.

is accomplished. Consider the crank $O\ B$ as the driver. The crank-pin B is a working fit in the block R which is arranged to slide in the slotted link L. The rods F and H are rigidly attached to the link, and are compelled to move in a straight line by the guides G, G'. As the crank revolves, the rods F and H are given a horizontal motion exactly equal to the horizontal motion of the pin B.

This mechanism is often applied to steam pumps, where one of the rods, as F, is the steam piston rod, and the other

is the plunger rod. A fly-wheel is driven by means of the slotted link and crank, and its kinetic energy makes it possible to cut off the steam before the end of the stroke. Without the fly-wheel full steam pressure must be carried throughout the stroke.

1443. In Fig. 350, if the crank rotates uniformly, the motion of the sliding rods is said to be **harmonic,** and the mechanism itself is often called the **harmonic-motion** mechanism. Harmonic motion may be defined as the motion executed by the foot of a perpendicular let fall on the diameter of a circle from a point moving with uniform velocity along the circumference.

1444. Slow-Motion Mechanism.—A mechanism consisting of two connected levers, or of a crank and lever, can be proportioned to produce a slow motion of one of the levers.

Such a combination is shown in Fig. 351, where two levers, A and B, are arranged to turn on fixed centers, and are connected by the rod R. Lever A is actuated by the handle H, secured to the same shaft. If H and lever A be turned left-handed, lever B will turn right-handed, but with a decreasing velocity, which will become zero when the lever A reaches position A_1 in line with the rod, which will then be in position R_1. Any further motion of A will cause B to return towards its first position, its motion being slow at first and then faster. The mechanism, it will be observed, is proportioned contrary to the principles stated in Art. **1432,** and produces a motion that is variable, but very powerful.

To obtain the greatest advantage, the lever B should be so placed that it will occupy a position perpendicular to the link R at the instant when A and R are in line. To lay out the motion, therefore, supposing the positions of the centers and lengths of the levers to be known, describe arc $b\ a$ about the center O, with a radius equal to the length of lever B. Through C, the center of lever A, draw the line $M\ N$ tangent to the arc just drawn. R and A must then be in line

along the line $M N$, and lever B must be perpendicular to it when in position B_1. Generally, there will be a certain required amount of movement for lever B. To secure this, draw B in its extreme left-hand position; then with C as a center, and a radius equal to the length of A, strike the arc

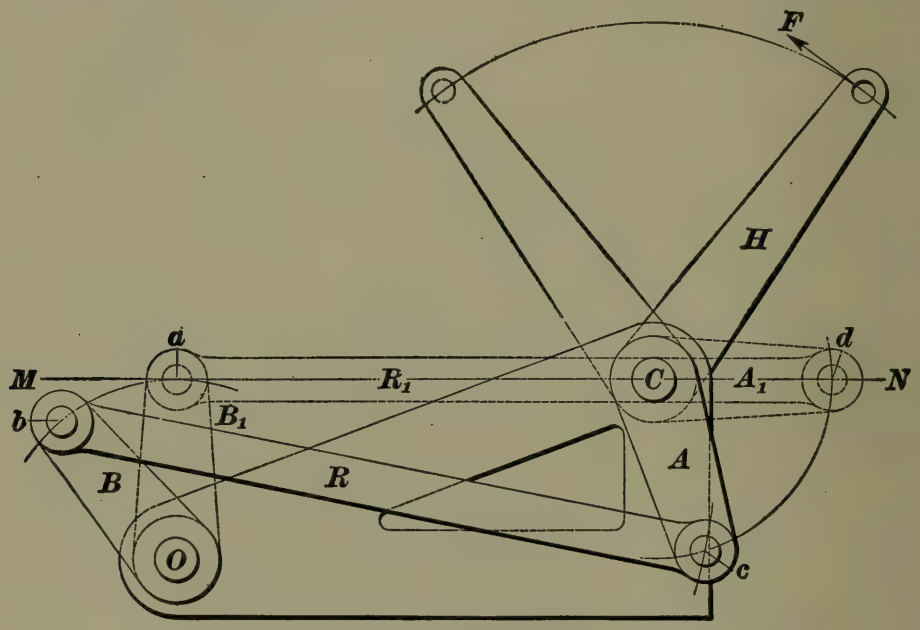

FIG. 351.

$d c$. Set the compasses to length $a d$, and from b as a center strike an arc cutting the arc $c d$. $C c$ will be the second position of lever A.

In the above combination, if the parts were proportioned to allow A to rotate like a crank, R and A would come into line twice during each revolution.

This mechanism has been used to operate platen printing presses, where oscillation of the handle H moves the platen to and from the type, through the lever B. It is also used to operate the exhaust valves in Corliss engines, in a manner which will be explained later.

1445. The **toggle-joint,** shown in Fig. 352, is a modification of the foregoing mechanism, and is much used in presses, punching and shearing machinery, etc. It consists of the two links $O R$ and $C R$, point O being fixed and point

C constrained to move in a horizontal line. A considerable movement of point R produces a very small movement in C,

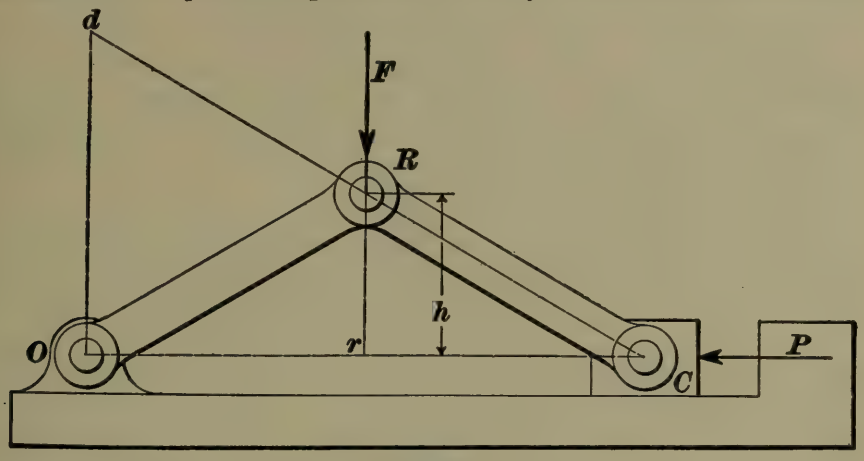

FIG. 352.

and consequently a pressure F, applied at R, can be made to produce a powerful pressure, or thrust, in a direction opposite to that of the arrow P.

THE FORCES ACTING IN LINK MECHANISMS.

1446. In order to understand how the forces act in a link mechanism, it will be necessary to again refer to the subject of moments, which is treated of in Elementary Mechanics.

The **moment of a force** *about any point is the product of the magnitude of the force and the perpendicular distance from the point to the line of action of the force.*

The tendency of a force to rotate a body about a point is measured by the *moment* of the force about that point. For example, let the crank C, in Fig. 353, be pivoted at O, and suppose a force P to act upon the crank-pin in the direction shown. Then, if the perpendicular distance from O to the line of action of the force be OA, the *moment of the force* tending to rotate the crank about O is $P \times OA$. If the force be stated in pounds and the perpendicular distance in inches, the product will be in *inch-pounds;* if the perpendicular distance be given in

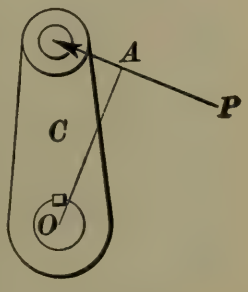

FIG. 353.

feet, the product will be in foot-pounds. These expressions, however, bear no relation to *foot-pounds of work*, and the student must avoid confusing the two.

In the case of a shaft having a pulley, gear, crank, or lever attached to it upon which a force acts tending to cause rotation of the shaft, the moment of the force is generally called the **twisting moment.**

1447. If two or more forces in one plane act upon a body, and are in equilibrium, then *the sum of the moments which tend to turn the body in one direction about a point is equal to the sum of the moments of the forces which tend to turn the body in the opposite direction about the same point.* Or, to state the principle more concisely, *the opposing moments about the point are equal.* This is called the **principle of moments.**

In the crank and connecting-rod mechanism, shown in outline in Fig. 354, the tendency of the force P to cause

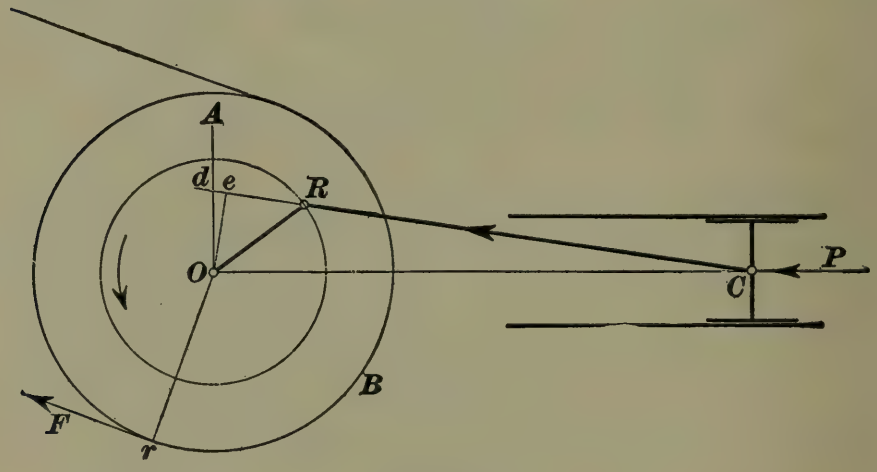

FIG. 354.

rotation of the crank about point O may be determined by resolving this force into two forces, one of which acts along the connecting-rod in the direction of the arrow, and which we will call P', and the other of which acts in a direction perpendicular to the guides. Draw $O\ e$ perpendicular to $C\ R$ produced; then, assuming the parts to be stationary for the instant, so that the effects of inertia may be neglected,

the twisting moment $= P' \times O\,e$. A simpler method, however, is the following: Let the force P act in the direction of the line $O\,C$. From O draw $O\,A$ perpendicular to $O\,C$, and note the point d where it intersects the center line of the connecting-rod, or of the center line produced. Then, it can be proved that the twisting moment about O due to the force P is $P \times O\,d$.

If a belt pulley B is attached to the shaft, the force P will be resisted by the pull F of the belt; and, by the *principle of moments*, $F \times O\,r = P \times O\,d$; whence,

$$F = \frac{P \times O\,d}{O\,r}. \qquad \textbf{(132.)}$$

EXAMPLE.—In a power pump, if a belt pull of 120 pounds is exerted upon the rim of the driving pulley, 24 inches in diameter, and the crank is in such a position that the distance $O\,d$ (Fig. 354) $= 2$ inches, what is the water pressure per square inch upon the pump plunger, if its diameter is 4 inches?

SOLUTION.—Radius of pulley $= 12'' = O\,r$. From formula **132**, $120 = \frac{P \times 2}{12}$, whence $P = 720$ lb. Area of piston $= 12.57$ sq. in. $720 \div 12.57 = 57.28$ lb. per sq. in. Ans.

1448. A drawing in which the arms, rods, and links of a mechanism are indicated by their center lines only is called a **skeleton diagram.**

Fig. 355 is a skeleton diagram of the motion shown in Fig. 351, the different parts being in the same position. Draw the line $C\,s$ perpendicular to $b\,c$, and suppose a force F to act at the end of the lever $C\,h$. By the principle of moments, the pull along $b\,c$ would then be such that $F \times C\,h =$ pull on $b\,c \times C\,s$, or

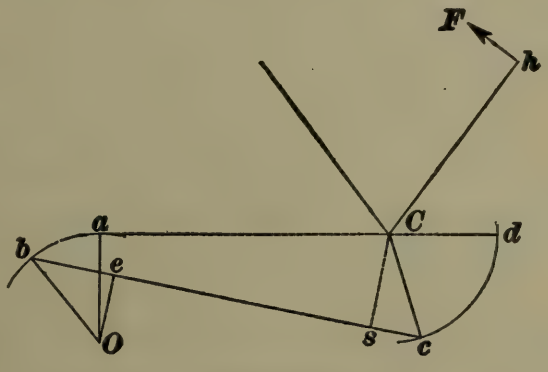

FIG. 355.

$$\text{Pull on } b\,c = \frac{F \times C\,h}{C\,s}. \qquad \textbf{(133.)}$$

The force necessary to balance the pull on $b\,c$ would be supplied by the resistance to motion by whatever force might be applied to the shaft O or the lever $b\,O$, and would be felt at the point b. If it were desired to find the twisting moment about the point O, we would multiply the pull on $b\,c$ by the perpendicular distance $O\,e$.

EXAMPLE.—In Fig. 355, if $F = 25$ lb., $C\,h = 2$ ft., $C\,s = \frac{1}{10}''$, and $O\,e = 3''$, (*a*) what would be the pull at b? (*b*) What is the twisting moment about O?

SOLUTION.—(*a*) Pull $= \dfrac{25 \times 24}{\frac{1}{10}} = 25 \times 24 \times 10 = 6{,}000$ lb. Ans.

(*b*) Twisting moment $= 6{,}000 \times 3 = 18{,}000$ inch-pounds. Ans.

1449. We will now consider the forces acting in the toggle-joint. In Fig. 356, let a pressure F be exerted upon

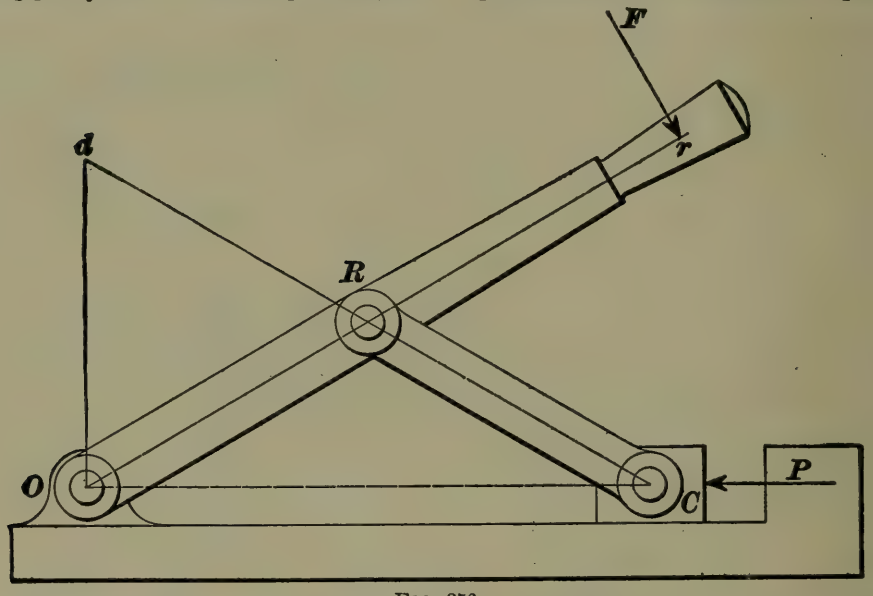

FIG. 356.

the handle in a direction at right angles to $O\,r$. The twisting moment about O is $F \times O\,r$, and the case becomes exactly similar to that of the connecting-rod crank, $O\,R$ corresponding to the crank and C to the cross-head. From C erect the perpendicular which intersects the center line of the link $C\,R$, extended, at d. Then, as before, $P \times O\,d = F \times O\,r$. It will here be more convenient to have the formula in terms of P. Hence,

$$P = \frac{F \times O\,r}{O\,d}. \qquad \textbf{(134.)}$$

The same formula applies when the force F acts as in Fig. 352. Drawing the line $O\ r$ perpendicular to the line of action of F, we have the twisting moment $F \times O\ r$ resisted by $P \times O\ d$.

1450. When the two links $O\ R$ and $R\ C$ are equal in length, the height h of the point R above a straight line drawn through points O and C will equal $\frac{1}{2}\ O\ d$. Hence, for equal links, formula **134** may be written,

$$P = \frac{F \times O\ r}{2\ h}. \qquad \textbf{(135.)}$$

EXAMPLE.—In Fig. 18, if $O\ r = 30''$, $O\ d = 6''$, and $F = 100$ lb., what thrust would be produced by the block C?

SOLUTION.—$P = \frac{100 \times 30}{6} = 500$ lb. Ans.

EXAMPLES FOR PRACTICE.

1. In Fig. 355, let $F = 250$ lb., $C\ h = 2$ ft., $C\ s = 2$ in., and $b\ O = 10$ in. If, in this position, the lever $b\ O$ is perpendicular to $b\ c$, what force would have to be exerted at a point midway between b and O, in order to resist the force F? Ans. 6,000 lb.

2. If the piston of an engine is 6 inches in diameter and the steam pressure 45 lb. per sq. in., what would be the tangential pressure at point R, in Fig. 354, when the crank is in such a position that $O\ d = 3$ in., the length of the crank being 8 in.? Ans. 477.13 lb.

3. What thrust would be exerted by the block C, in Fig. 356, if the force F were to act in a vertical instead of a slanting direction? Take $F = 100$ lb., $O\ r = 60$ in., $O\ d = 1$ in., and distance of point r above the line $O\ C = 8$ in. Ans. 5,946½ lb., nearly.

QUICK-RETURN MOTIONS.

1451. Quick-return motions are used in shapers, slotters and other machines, where all the useful work is done during the stroke of a reciprocating piece in one direction. During the working stroke the tool must move at a suitable cutting speed, while on the return stroke, when no work is performed, it is desirable that it should travel as rapidly as possible.

Vibrating-Link Motion.—The mechanism shown in Fig. 357 has been applied to shaping machines operating on

metal. Motion is received from the pinion P, which drives the gear G. The pin b is fast to the gear, and pivoted to it is the block B, which is fitted to the slot of the link $C\,D$. As the gear rotates, the pin describes the circle $b\,e\,d\,c$, the block sliding in the slot of the link $C\,D$, causing $C\,D$ to oscil-

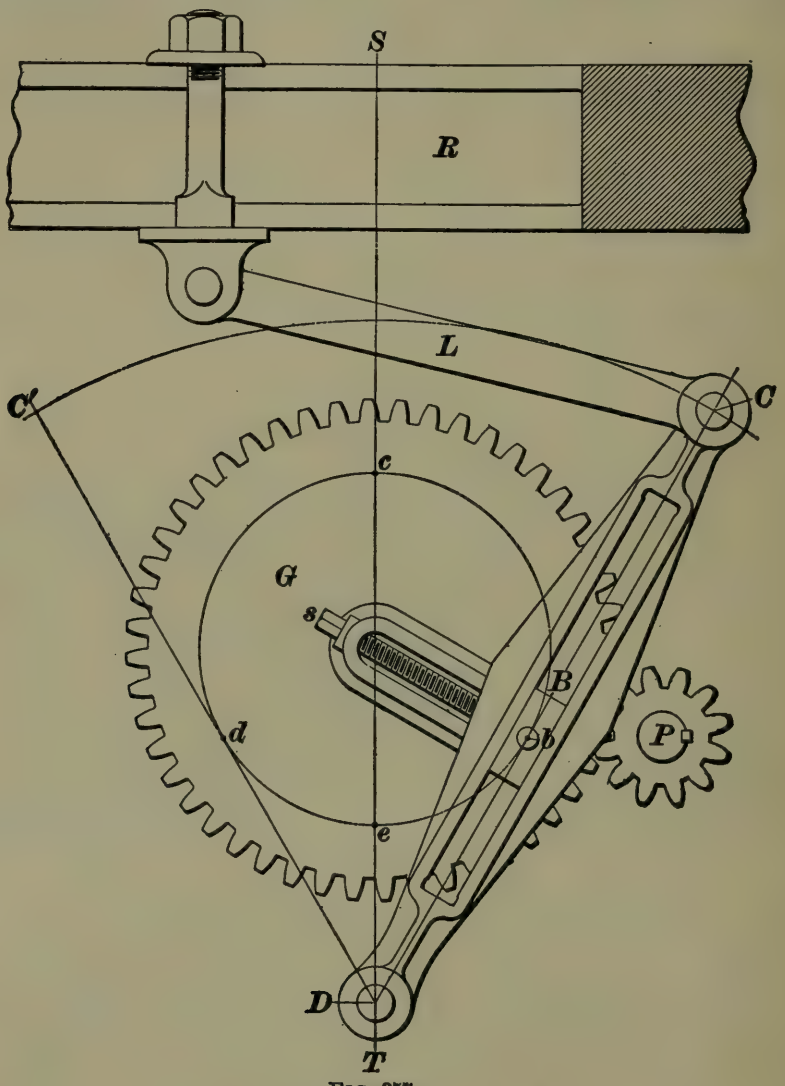

FIG. 357.

late about the point D, as indicated by the line $C\,C'$ in the figure. The rod L connects the upper end of the link with the tool slide, or "ram," R, which, therefore, oscillates with it, but is constrained by guides (not shown) to move in a straight, horizontal line.

During the cutting stroke, the pin *b* travels over the arc *d c b*, or around the greater arc included between the points of tangency of the center lines *C' D* and *C D*. During the return stroke the pin passes over the shorter arc *b e d*, and as the wheel *G* revolves with a uniform velocity, the lines of the forward and return strokes will be to each other as the length of the arc *d c b* is to the length of the arc *b e d*. The throw of the slotted link and the travel of the tool can be varied by the screw *s*, which moves the block *B* to and from the center of the gear. The rod *L*, instead of vibrating equally above and below a center line of motion, is so arranged that the force moving the ram during the cutting stroke will always be downwards, causing it to rest firmly on the guide.

1452. To lay out the motion, proceed as follows: Draw the center line *S T*, Fig. 358, and parallel to it the line *m n*, the distance between the two being equal to one-half the longest stroke of the tool. About *O*, which is assumed to be the center of the gear, describe the circle *b d c* with a radius equal to the distance from the center of *G* to *b* (Fig. 357) when set for the longest stroke. Divide the circumference of the circle into an upper and lower arc, extending equally on each side of the center line, and having the same ratio as the forward and backward strokes. In this case the return is 2 to 1, and the circle is divided into three equal parts, as shown at *b*, *d*, and *c*, thus making the arc *d b* equal to one-half *d c b*. Draw the radial lines *O b* and *O d*. Through *b* draw *C D*, perpendicular to *O b*; the point *D*, where it intersects *S T*, will be the fulcrum, and the point *C*, where it intersects *m n*, the upper end of the slotted lever. Through *C* draw the horizontal line *C C'*, making *C' E* equal to *C E*. Draw *C' D*, which should be tangent to the circle at *d*, thus giving the other extreme position of the lever. It is to be observed that for a quick return of 2 to 1, the only condition is that lines *C D* and *C' D* shall be perpendicular to *O b* and *O d*, respectively; points *C* and *D* and the length of radius *O b* can be varied considerably.

1453. To plot the motion, draw the center line of motion *R L* through the point at which the connecting-rod attaches to the tool slide. Divide the circle *d c b* into a number of equal parts, as *1*, *2*, *3*, etc., and from *D* draw lines through these points, extending to the arc *C' C*. Number the points of division on the circle, and give corresponding numbers to the points of intersection on the arc *C' C*. With these last points as centers, and with a radius equal to the length of the connecting-rod *L*, in Fig. 357, strike arcs

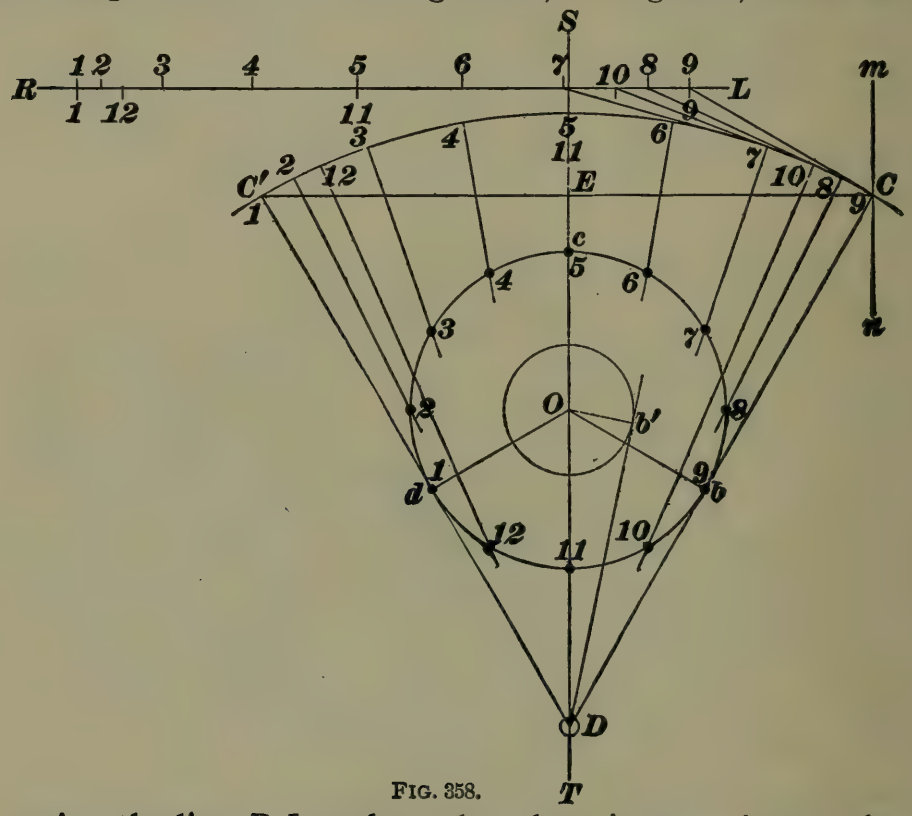

FIG. 358.

cutting the line *R L*, and number these intersections so that they will correspond to the other points. In Fig. 358, supposing the gear to turn with a uniform motion, the tool slide will move along *R L* from point *1* to *2* during the first $\frac{1}{12}$ of a revolution; during the next $\frac{1}{12}$ revolution, from point *2* to *3*, etc., on the forward stroke. On the return stroke, from point *9* to *10*, *11*, *12*, and *1*, the motion is much less uniform.

Another point about this motion is that, as the radius *O b* is diminished to shorten the stroke, the return becomes less

rapid, as can be seen from the dotted lines in the figure, which show the radius $O\ b$ shortened to $O\ b'$, and the corresponding position of $C\ D$.

1454. Whitworth Quick-Return Motion.—This mechanism is shown in principle in Fig. 359. The pin b, inserted in the side of the gear G, gives motion to the slotted link $C\ D$, as in the vibrating link motion. This motion closely resembles the previous one, the difference being that the center D, of the slotted link, lies *within* the circle described by the pin b, while in the previous case it lies *without* it. To accomplish this result, a pin P is provided for the gear to turn upon, and is made large enough to include another pin D, placed eccentrically within it, which acts as the center for $C\ D$. With this arrangement, the slotted link follows the crank-pin during the complete revolution, instead of

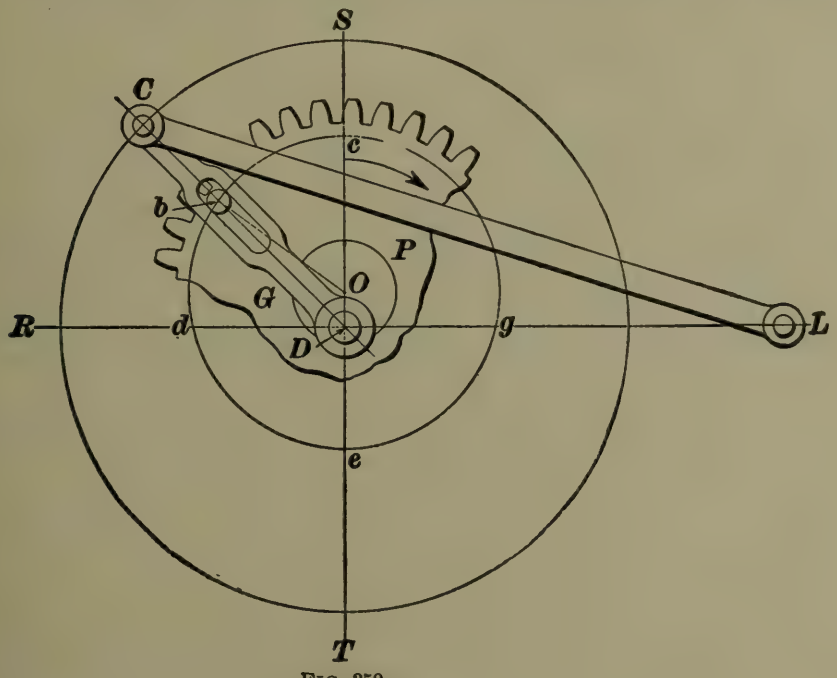

FIG. 359.

vibrating, and thus becomes a crank. The stroke line $R\ L$ passes through the center of D, which is below the center of P. The forward, or working, stroke occurs while the crank-pin b passes over the arc $d\ c\ g$, and the quick return occurs while it travels over the arc $g\ e\ d$. During each of these

intervals, the link $C\ D$ completes a half revolution, and, consequently, must move more rapidly, while the crank-pin describes the shorter arc.

1455. To proportion the motion, it is only necessary to so locate the stroke line $R\ L$ that it will divide the crank-pin circle $d\ c\ g\ e$ into two parts, $d\ c\ g$ and $g\ e\ d$, in the proportions of the forward and return strokes. The point D, where this line cuts the center line $S\ T$, is the position for the center of the slotted crank. The motion is plotted as in Fig. 360. Divide the crank-pin circle $d\ c\ g\ e$ into a number

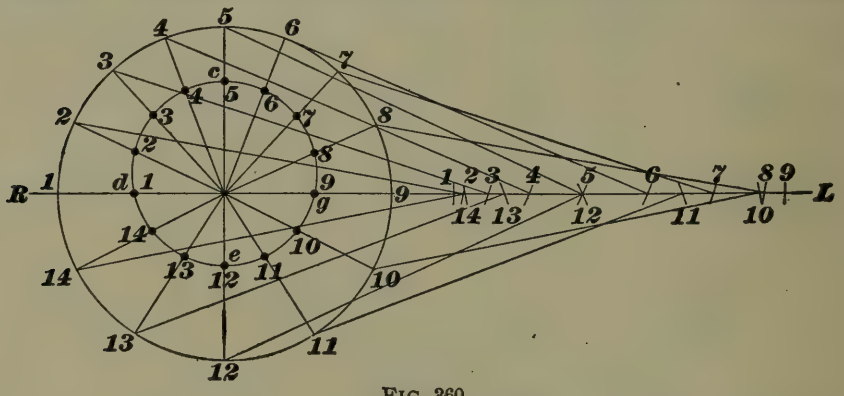

FIG. 360.

of equal parts. From D, the center of the slotted crank, draw radial lines through these points to the outer circle, which represents the path of pin C (Fig. 359), using the latter points of intersections as centers, and with a radius equal to the length of the connecting-rod, strike off points on the stroke line, which will show the movement of the tool for equal amounts of rotation of the driving gear.

1456. Fig. 361 shows the mechanism as practically constructed. The gear G is driven with a uniform velocity, in the direction of the arrow, by the pinion H. It rotates upon the large pin P (which is a part of the frame of the machine), and carries the pin b which turns in the block k and is capable of sliding in a radial slot in the piece B, as clearly shown in the sectional view. This piece B is supported by the shaft D, which turns in a bearing extending through the lower part of the large pin. $R\ L$, drawn through the center of D, is the line of motion of the tool slide. The

connecting-rod, actuating the tool slide, is pivoted to the stud C, which is clamped to piece B. The parts are lettered

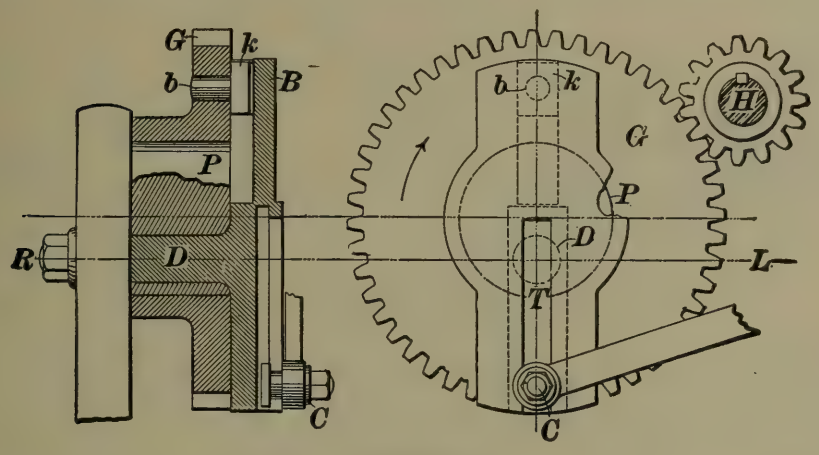

FIG. 361.

as in the two previous cuts, and the student should be able to study out the working of the mechanism without further explanation.

1457. The Adjustment of the Stroke.—The radial slot T, in Fig. 361, to which the connecting-rod is attached, provides for the adjustment of the *length* of the stroke, and if the point of attachment of the rod to the tool slide is also made adjustable, the *position* of the stroke, as well as its length, can be changed. Thus, in the case of a shaping machine, it is not only desirable to regulate the *distance* passed over by the tool, but to have the stroke extend *exactly to a certain point*. These two adjustments are often required in mechanism where reciprocating pieces are employed.

OTHER LINKAGES.

1458. The **universal joint,** shown in Fig. 362, is used to connect two shafts, the center lines of which are in the same plane, but make an angle with one another. It is generally constructed in the following manner: Forks F, F are fastened to the ends of the shafts A and B, and have burrs a, a tapped out to receive the studs S, S. The ends of these studs are turned cylindrical, and are a working fit, in

corresponding bearings in the ring *R*. The details of construction may be seen in the right-hand part of this figure.

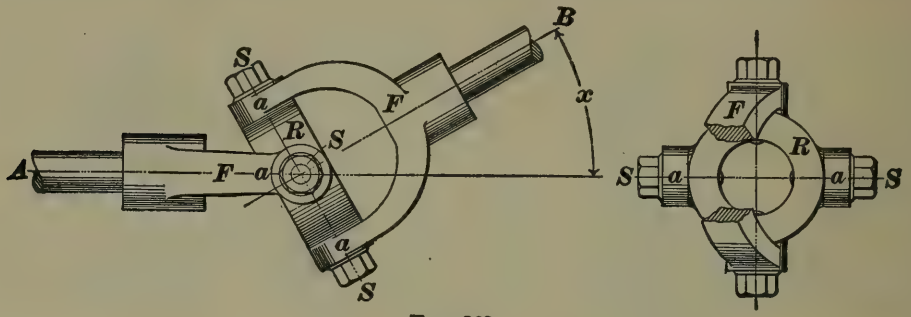

FIG. 362.

In heavy machinery the forks are forged and welded to the shafts.

1459. An objection to the universal joint is that the motion transmitted is not uniform. During one revolution the speed of the driven shaft varies twice between a velocity that is greater, and one that is less than the velocity of the driving shaft, and between these points there are four positions where the velocity of the two shafts is the same. Suppose the driving shaft to revolve uniformly; the *least* speed of the driven shaft will be equal to the speed of the driving shaft, multiplied by the cosine of the angle between the two axes produced (the angle x in Fig. 362). The *greatest* speed will be equal to the speed of the driver, multiplied by $\frac{1}{\cos x}$. Thus, if the shafts revolve at the rate of 100 revolutions per minute, and the angle between them is 30°, the least speed of the driven shaft will momentarily be at the rate of $100 \times \cos 30° = 100 \times .86603 = 86.6$ revolutions per minute, and the greatest speed, $\frac{100}{\cos 30°} = \frac{100}{.86603} = 115.47$ revolutions per minute.

1460. To obviate this trouble, which brings excessive wear and stresses on the working parts, the **double universal joint** is used, as shown in Fig. 363. Let *A* and *B* be the two shafts to be connected. Draw their center lines, intersecting at *o*, and bisect the angle *A o d* by the line *a o*.

The center line $e\,f$ of the connecting shaft D must now be drawn perpendicular to $a\ o$. Care must be taken that the forks on the intermediate shaft lie in the same plane. Thus constructed, a uniform motion of A will give a varying motion to D, which in turn will transmit to B the same motion as that of A. This arrangement is often employed to connect parallel shafts, as would be the case in the figure if $o\,d$ took the direction $s\,t$. In such a case, it makes no difference what angle is made by $e\,f$, except that, if the joints are expected to wear well, it should not be too great.

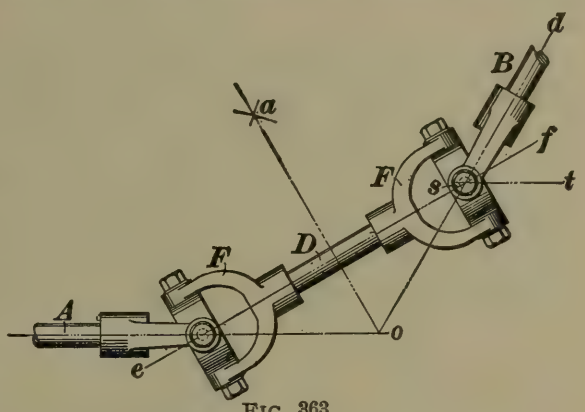

FIG. 363.

1461. Watt's Parallel Motion.—A **parallel motion,** more properly called a **straight-line motion,** is a link mechanism designed to guide a reciprocating piece, as a piston rod, in a straight line. In the early days of the steam engine, parallel motions were extensively used to guide the pump and piston rods, but are now seldom met with, except on steam-engine indicators, where they are employed to give a straight-line motion to the pencil. Very few parallel motions produce an absolutely straight line, and it is customary to design them so that the middle and two extreme positions of the guided point will be in line. The best known motion is the one shown in Fig. 364, which was invented by James Watt, in 1784. The links $A\ B$ and $C\ D$ vibrate on their fixed centers A and D. The other ends, B and C, are connected by the link $C\ B$, which has the point O so chosen that it will pass through three points, O_1, O, and O_2, in the straight line $S\ S$ perpendicular to the links $C\ D$ and $A\ B$ when in their middle positions. When the point O is at the upper extremity of its motion at O_1, the

linkage assumes the position $A\ B_1\ C_1\ D$; at the lower extremity it assumes the position $A\ B_2\ C_2\ D$.

1462. Having given the length $O_1\ O_2$ of the stroke, and O, the middle position of the guided point, the center of one lever as A, and the perpendicular distance between

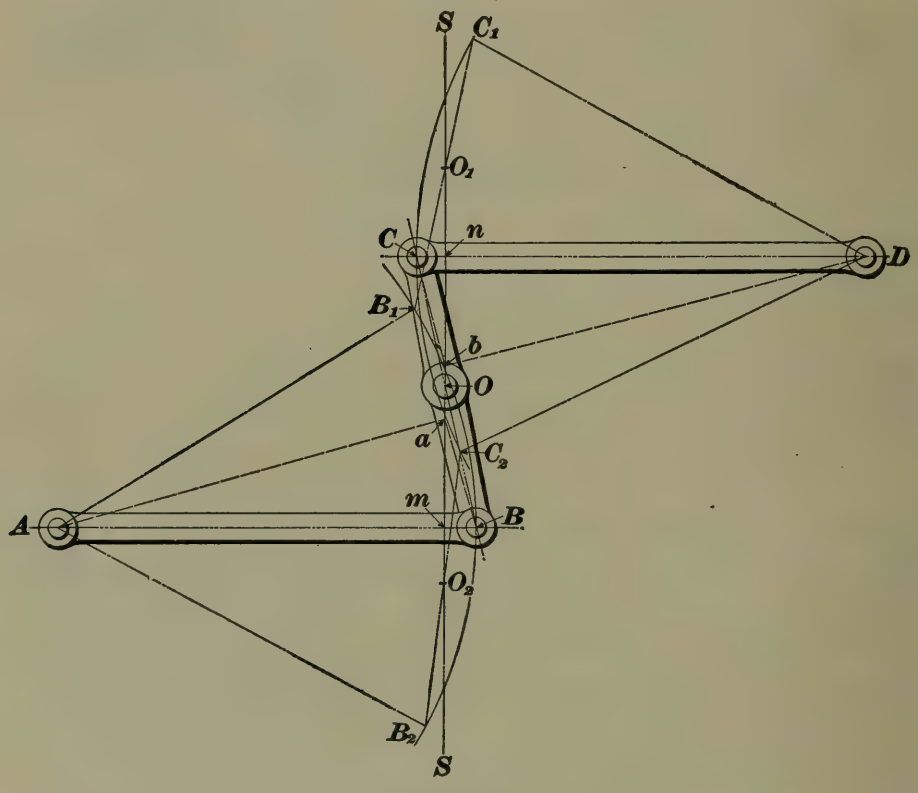

FIG. 364.

the levers when in mid position, the motion may be laid out as follows: Let $S\ S$ be the path of the guided point, O its middle position, A the given center, and $A\ B$ and $C\ D$ indefinite parallel lines, representing the middle positions of the levers. From m, where $A\ B$ intersects $S\ S$, lay off upon $S\ S$ the distance $m\ a$, equal to $\frac{1}{4}$ of the stroke. Join A with a and draw an indefinite line $a\ B$, perpendicular to $A\ a$. The point B, where $a\ B$ intersects line $A\ B$, is the right-hand extremity of lever $A\ B$, and the lower extremity of link $C\ B$. The point C is obtained by drawing an indefinite line through B and O; where it intersects the line $C\ D$ will be the point.

To find center D lay off $n\,b = \frac{1}{4}$ stroke; connect C and b, and from b draw an indefinite line perpendicular to $C\,b$; the center will be at its intersection with $C\,D$.

If the positions of both centers should be known, mark points a and b as before. Draw $A\,a$ and $b\,D$, and through b and a draw perpendiculars to these lines; the points B and C, where they intersect the center lines of the levers, are the extremities of these levers. Join B and C by the link $B\,C$, and the point O, where the center line of this link cuts the line of motion $S\,S$, is the position of the guided point O on the link $B\,C$.

CAMS.

1463. A **cam** is a turning or sliding piece, which, by the shape of its curved edge, or a groove in its surface, imparts a variable or intermittent motion to a roller, lever, rod, or other moving part.

1464. **General Case.**—Fig. 365 represents the general case for a **plate cam.** The cam C is supposed to turn in a right-handed direction about the axis B, and to transmit a variable motion through the roller A, and the lever L, to the rod R. The lever swings on the axis 0_0, the roller moving up or down on the arc 0 to 6, as the cam revolves. The roller is held in contact with the cam by its own weight and that of the lever and the rod.

Suppose the location of the cam shaft B and the rod R to be known, and that the cam is to revolve uniformly right-handed and impart motion to the rod, so that during the first half of every revolution it will move uniformly downwards, during the next quarter turn it will remain stationary, and during the last quarter it will return to its former position with a uniform motion.

1465. In order to determine the outline of the cam upon which the *circumference* of the roller bears, it is necessary to find an outline which will give the *center* of the roller the required motion. Then, by placing the point of the

compasses at different places on this outline, and striking arcs inside of it, with radii equal to the radius of the roller, the curve for the actual cam can be drawn, the curves being tangent to the arcs, and parallel to the first outline.

In this case, the roller A moves in an arc directly over the center of B. Knowing the distance the rod R is to move, we must so choose the point 0_0 and the throw of the cam, that is, the distance that A is to move, that (see figure) the movement of R will be to the movement of A as r is to a.

Now, with 0_0 as a center and a radius equal to a, describe

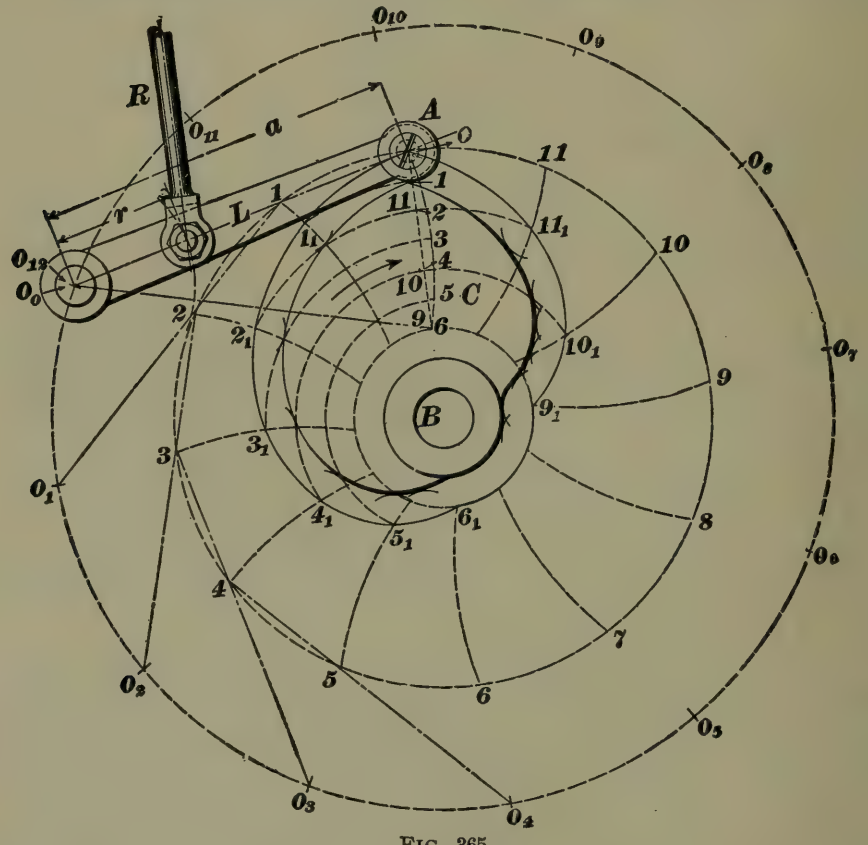

FIG. 365.

the arc *0-3-6*, in which the center of the roller is to move, and mark the highest and lowest points *0* and *6* of the roller. The lower point should not be near enough the shaft to allow the roller to strike the hub of the cam.

1466. It evidently makes no difference with the relative motions of the cam and roller whether the cam turns

right-handed, and the lever remains with its axis at 0_0, or whether the cam is assumed to be stationary, and the lever and roller move *left-handed* in a circle about the center *B*. This latter process will be adopted.

With *B* as the center, draw a circle through 0_0 and space it into a number of equal parts, say 12, and number the divisions around to the left. Now, assume the lever to move around the axis *B* in a left-handed direction. It will take positions 0_1-*1*, 0_2-*2*, 0_3-*3*, etc. Hence, using these several points on the outer circle as centers, and with radii equal to *a*, the length of the lever, describe a series of arcs corresponding to the original arc *0-3-6*. Number these arcs *1*, *2*, *3*, etc., to correspond with the numbers on the outer circle.

During the first half-turn of the cam, or, what is the same thing, while the lever is moving from its position at 0_0 to 0_6 on the outer circle, the center of the roller must move uniformly from its outer to its inner position. Hence, draw the chord of the original arc *0-3-6*, and divide it into six equal parts, numbering them towards the center as shown. Then, with *B* as a center, describe an arc through point *1*, intersecting arc No. *1* in point 1_1. Now, sweep arcs through the other points, getting 2_1, 3_1, 4_1, etc., which are all points in the curve of the cam outline, for the center of the roller. From 0_6 to 0_9 (on the original circle), the center of the roller remains at a constant distance from *B*; hence, *6* and *9* must be connected by a circular arc. From 0_9 to 0_{12} the points are found as before by dividing the chord *0-6* into three equal parts and numbering them as shown, the numbers running outwards.

The final steps are to draw the cam outline for the center of the roller through points 1_1, 2_1, 3_1, 4_1, etc.; then, draw the outline for the cam itself parallel to it, as explained at first. This is easily done by setting the dividers to describe a circle whose radius shall be the same as that of the roller *A*. Then, with various points on the curve *0-*1_1-2_1-3_1——11_1 as centers (the more, the better), describe short arcs as shown. By aid of the irregular curve, draw a curve which shall be tangent to the series of short arcs; it will be the required

outline of the cam, and will be parallel to the curve $0\text{-}1_1\text{-}2_1\text{-}3_1 \ldots\ldots 11_1$.

1467. The question sometimes arises in designing cams of this nature, whether it is the chord *0-6* or the arc *0-6* that should be divided to give the roller the proper outward and inward motions. For all practical purposes either way is sufficiently exact, but *neither* is quite correct, though it is better to space the chord. The *exact* way would be to draw the rod R and the roller in the different positions desired, and then design the cam to meet the roller at these points.

1468. The cam shown in Fig. 366 differs in principle from the preceding one only in that the roller moves in a straight line, *passing to one side* of the center B of the shaft. Let it be required to design a cam of this nature to revolve right-handed, and which shall cause the roller A and rod R to rise with a uniform motion to a distance h during two-thirds of a revolution. When the roller reaches its highest point, it is to drop at once to its original position, and to remain there during the remainder of the revolution. Assume the distance from the center B to the center line of R to be equal to r.

With r as a radius, describe a circle about B, as shown. The center line of the rod will be tangent to this circle in all positions. With the same center and a radius equal to $B\ A_0$, A_0 being the extreme outward position of the roller, describe the outside circle $A_0\ 4\text{-}8\ A_0$. Divide this circle into some convenient number of equal parts, the number depending upon the fraction of a revolution required for the different periods of motion. Since the roller is to rise during two-thirds of a revolution, we may use 12 divisions as before, thus giving $\frac{2}{3} \times 12 = 8$ whole divisions for the first period.

Now, proceeding as before, by assuming the rod to move about the cam to the left, its positions when at the points of division $A_1\ A_2$, etc., will be represented by drawing lines

through these points, and tangent to the inner circle, whose radius is r. A and A_0 are the two extreme positions of the roller. Divide the line $A\,A_0$ into eight equal parts, numbering them from the inside outwards, since the first movement of the roller is outwards. With B as a center, draw concentric arcs through these points, intersecting the tangents at 1_1, 2_1, 3_1, etc. At point 8 on the outer circle, the roller drops along the line 8-8_1, the point 8_1 being determined by drawing an arc about B with a radius $B\,A$. From

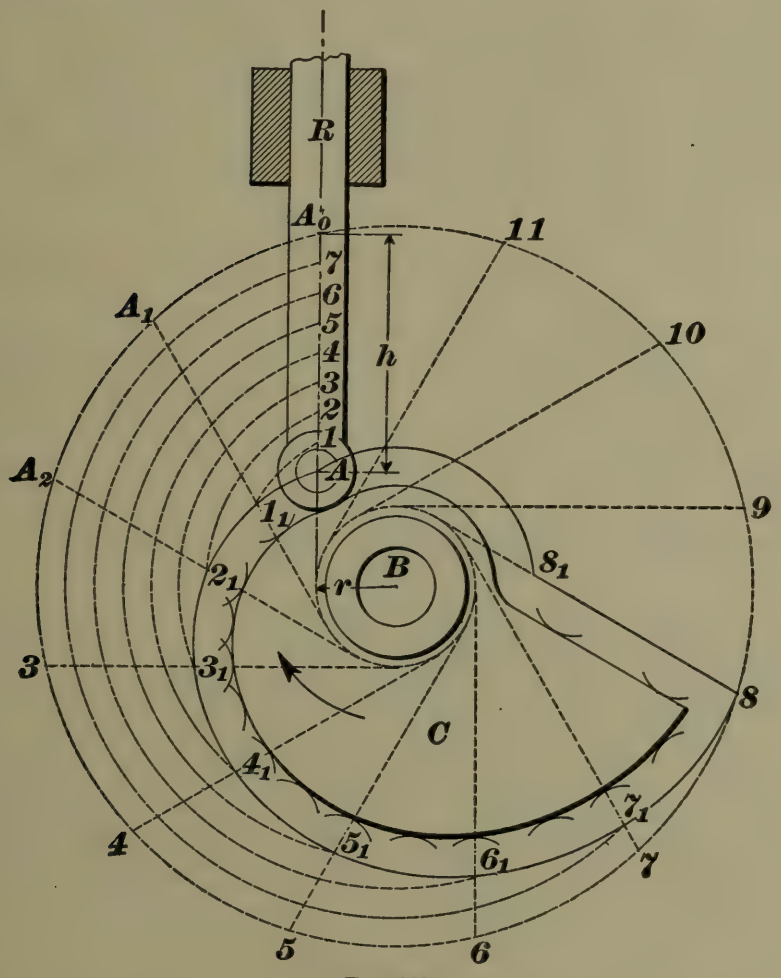

FIG. 366.

point 8 back to A the rod is at rest. The true cam outline is now to be found, as was done in the last example, by striking small arcs from points on the curve A 1_1-2_1-3_1-4_1-5_1-6_1-7_1-8-8_1,

as centers. This cam can revolve in only one direction when operating the rod *R*.

1469. Harmonic-Motion Cams.—If a cam is required to give a rapid motion between two points, without regard to the *kind* of motion, its surface should be laid out so as to gradually accelerate the roller at the start, and to gradually retard it at the end of its motion, in order that the movement may be as smooth and free from shocks as possible. For this reason cams are frequently designed to produce harmonic motion—that is, a uniform motion of the cam produces a motion of the roller like that of the slotted cross-head in Fig. 350. The diagram in Fig. 367 shows how this latter motion is plotted. Let *A C* be the stroke line of

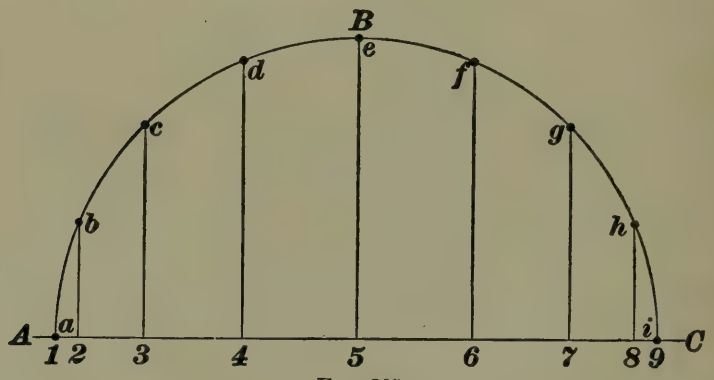

FIG. 367.

the cross-head, and *A B C* the crank-pin circle, which is divided into a number of equal spaces by the points *a*, *b*, *c*, *d*, etc. Dropping perpendiculars from these points, we obtain points *1*, *2*, *3*, *4*, etc., on the stroke line. The spaces between the latter points represent the distances traversed by the cross-head while the crank-pin moves through the equal spaces *a b*, *b c*, *c d*, etc. It will be seen that the distances increase from points *1* to *5*, and decrease from *5* to *9*.

1470. To apply the motion to the two cams previously taken up, we should simply have to lay off the distances *1-2*, *2-3*, *3-4*, etc., on the chord *0-6*, in Fig. 365, or the line $A_0 A$, in Fig. 366, in place of the equal spaces used in these figures.

Fig. 368, which represents the left side of the first cam considered, laid out in this way, shows a convenient method of spacing. Upon the chord *0-6*, as a diameter, draw the semi-circle *0 d 6*; divide it into a suitable number of equal parts and project these divisions by straight lines to the chord *0-6*. Through the points of intersection *1*, *2*, *3*, *4*, etc., and with *B* as a center, describe the arcs $1\text{-}1_1$, $2\text{-}2_1$, $3\text{-}3_1$, etc., and complete the cam outline, as before.

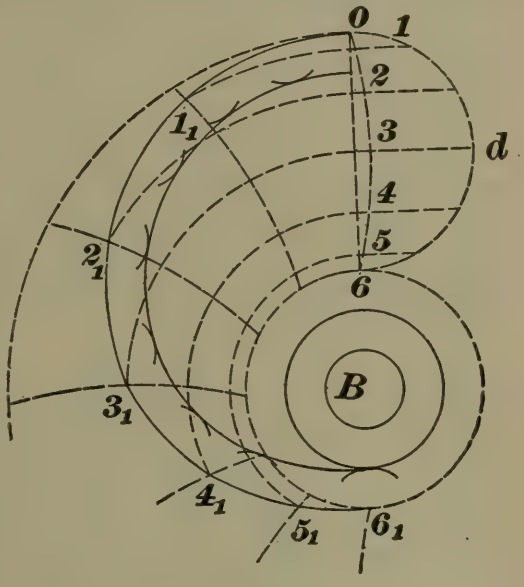

FIG. 368.

1471. Positive-Motion Cams.—The cams thus far considered can drive the roller in one direction only, making a spring or weight necessary to keep the two in contact. If the cam plate should extend beyond the roller, however, and a groove should be cut in it for the roller to run in, the motion of the roller would be *positive* in both directions.

1472. The word **positive,** when applied to a mechanism, has a different meaning from any heretofore given to it. A mechanism so constructed that nothing short of actual breakage of some one of its parts can keep it from working properly when motion is imparted to one of the links which operates it is called a **positive mechanism,** or a **positive gear,** when speaking of valve gears, and the motion produced is called a **positive motion.** Those mechanisms which depend for their operation upon the raising or lowering of a weight (i. e., upon gravity), or the action of a spring, are termed **non-positive** or **force-closed mechanisms.** Non-positive mechanisms, although extensively used, are of a lower order of mechanical excellence than positive mechanisms, and, other things being

equal, a positive motion should be chosen when designing a mechanism, since a non-positive one will refuse to work if the weight or the part operated by the spring should get "caught."

1473. Sometimes a positive motion is secured with a plate cam by causing it to revolve between two rollers rigidly connected, as illustrated in Fig. 369. The rollers *A* and *E* turn upon pins in one end of the rod *R*. The rod is slotted between the rollers, so that the cam shaft may

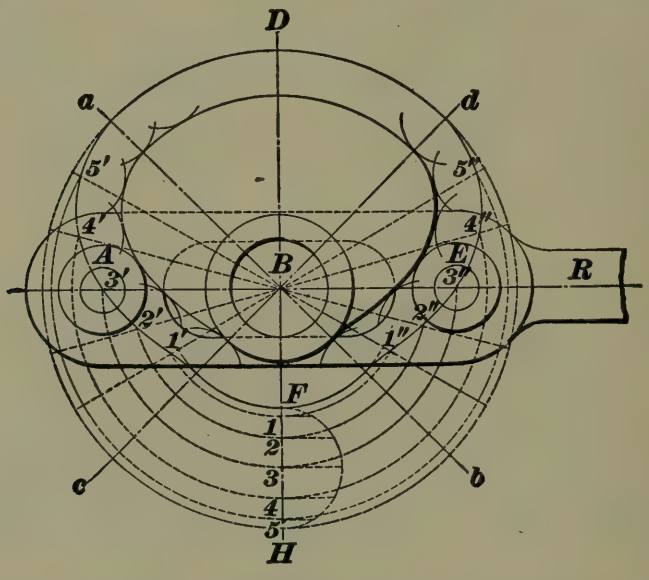

FIG. 369

pass through it and still allow the rod to move to the right and left. The center line of motion of the rollers passes through the center *B* of the shaft, whatever the position of the cam or rod.

1474. Let it be required that during one-quarter of a revolution of the cam the rod shall move to the right or left, according to the position of the cam at the start; that during the next quarter the rod shall be held stationary; that during the third quarter it shall move to its original position, where it is to remain for the rest of the revolution.

Draw the line *D H*, and mark the point *B*. Lay off a distance *B F*, such that when the center of one of the rollers is

at F the hub of the cam will not interfere with the roller. Lay off the distance $F\,H$ beyond F, equal to the required movement of the rod. With B as a center and a radius equal to $B\,H$, describe a circle. Divide the circle into four quadrants by the lines $a\,b$ and $c\,d$, making angles of 45° with $D\,H$, and with center B and radius $B\,F$ strike an arc as shown. That part of the arc included in the lower quadrant, and that part of the outer circle included in the upper quadrant, form two parts of the required outline, and the distance between the centers of the rollers must be equal to $D\,F$.

Now, for the two side quadrants, it is evident that the distance between any two diametrically opposite points on the outline must be equal. Thus, the distance from *1'* to *5''*, from *2'* to *4''*, from *3'* to *3''*, must all be equal to the distance $D\,F$. These points are obtained by laying off points on $F\,H$ and drawing arcs through them, proceeding exactly as with the other cams; *but, in order to have the curves correct, point 1 must be as far from F as 5 is from H; point 2 as far from F as 4 is from H, etc.* The harmonic motion curve fulfils this condition, and was used in this case. The other points of construction should be understood from what has gone before.

1475. A third kind of positive-motion cam consists of a cylinder having a groove on the surface, which imparts motion to the roller in a plane parallel to the axis of the cam.

Suppose that during one-half a revolution of the cylinder, in Fig. 370, the arm is to vibrate to the left and back once, as indicated, and that during the other half revolution it is not to move. Let the motion of the roller be harmonic.

The problem consists in finding the center line of the groove, from which, by striking arcs, the sides against which the roller bears can be determined. To lay out the curves, assume the surface of the cylinder to be unwrapped, or developed, as represented by the figure $a\,b\,d\,c$, which represents only a little more than one-half of the length of the

surface, in order to save room. Draw a line $M\,N$ through the center of this strip, of a length equal to the circumference of the cylinder, and divide it into a number of equal parts, as indicated by $O_0\,O_1$, $O_1\,O_2$, etc. Also, draw two lines, $S\,T$ and $L\,P$, parallel to $M\,N$, and at a distance from it equal to one-half the desired stroke of the roller. Now, with

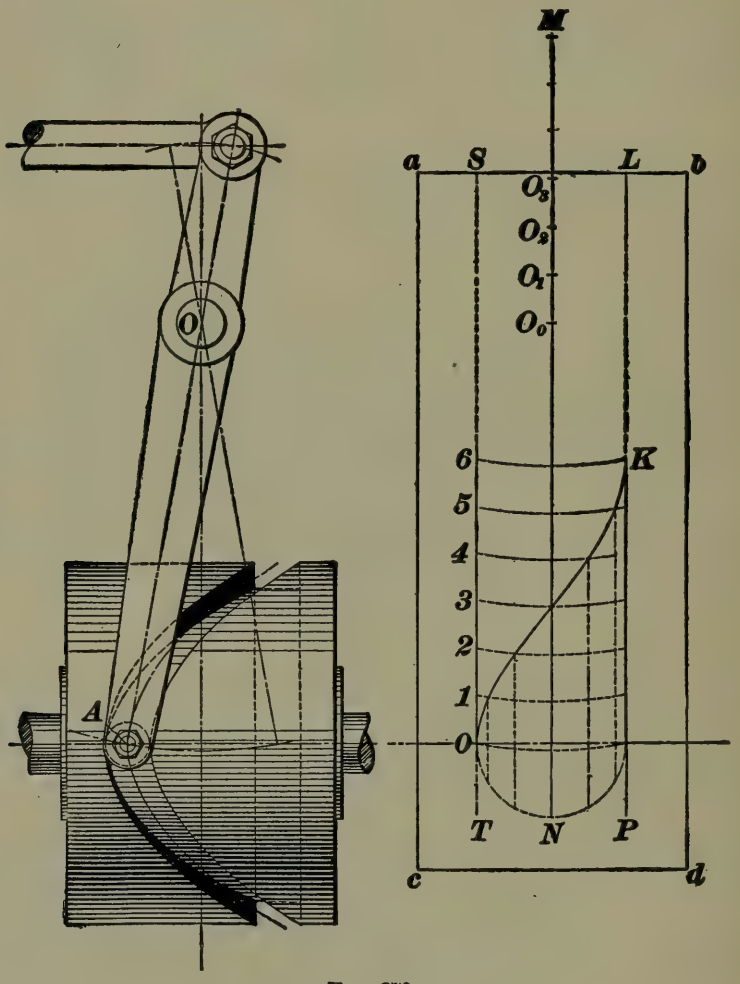

FIG. 370.

a radius $O\,A$ (left-hand figure), and centers O_0, O_1, O_2, etc., strike arcs *0*, *1*, *2*, *3*, etc., and plot the curve by the aid of these arcs. The line $O\,K\,L$ is the center line curve for one-half of the cam, the other half being like the first. The outline can easily be transferred to the cylinder itself.

BELTING.

1476. Belts running over pulleys form a convenient means for transmitting power, but they are not suited to transmit a precise velocity ratio, owing to their tendency to stretch and slip on the pulleys. For driving machinery, however, this freedom to stretch and slip is an advantage, since it prevents shocks that are liable to occur when a machine is thrown suddenly into gear, or when there is a sudden fluctuation in the load.

1477. Velocity Ratio.—Let four pulleys be connected by belt, as shown in Fig. 371. Let D_1 and D_2 be the diameters of the drivers, F_1 and F_2 of the followers, N_1 and N_2

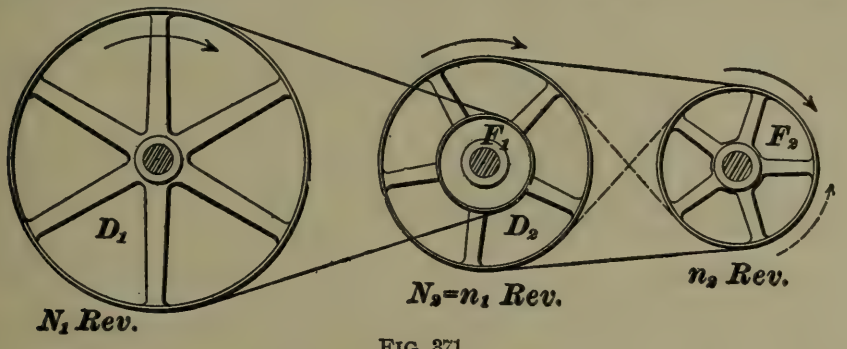

FIG. 371.

the number of revolutions per minute of the drivers, and n_1 and n_2 of the followers. The two middle pulleys are keyed to the same shaft and revolve together.

Consider first the pulleys whose diameters are D_1 and F_1. Assuming that there is no slipping or stretching of the belt, the circumferential speeds of the pulleys will be the same as the velocity of the belts passing over them. Hence, $D_1 \times 3.1416 \times N_1$, the circumferential speed of the first driver, $= F_1 \times 3.1416 \times n_1$, the circumferential speed of the first follower. Canceling 3.1416 from both sides of the equation, we have $D_1 N_1 = F_1 n_1$, or, dividing by D_1 and n_1,

$$\frac{N_1}{n_1} = \frac{F_1}{D_1}. \qquad \textbf{(136.)}$$

That is, *the speeds or numbers of revolutions of two connected pulleys are inversely proportional to their diameters.*

1478. A short way of applying this principle is by the following rule for two pulleys:

Rule.—*Multiply together the number of revolutions and diameter of one pulley, and divide by the given number of revolutions, or given diameter, of the other pulley. The result will be the required diameter or number of revolutions.*

EXAMPLE.—A pulley 30 inches in diameter, making 210 revolutions per minute, drives a second pulley 14 inches in diameter. How many revolutions per minute does the latter pulley make?

SOLUTION.—$30 \times 210 = 6{,}300$, and $6{,}300 \div 14 = 450$ revolutions. Ans.

EXAMPLE.—The driving pulley of a machine is one foot in diameter and must make 750 revolutions in 5 minutes. What size pulley should be used on the driving shaft, if its speed is 143 revolutions per minute?

SOLUTION.—In all examples of this kind the speeds and diameters must be reduced to the same units. 750 rev. in 5 min. $= 750 \div 5 = 150$ rev. per min.; one foot $= 12$ in. Hence, $12 \times 150 = 1{,}800$, and $1{,}800 \div 143 = 12.6$ in., nearly. Ans.

1479. From the equation $D_1 N_1 = F_1 n_1$, derived above, we obtain, by dividing by F_1, $n_1 = \frac{D_1 N_1}{F_1}$. In like manner, taking the other two pulleys in Fig. 371, we obtain $N_2 = \frac{F_2 n_2}{D_2}$. But the two middle pulleys revolve together, so that the values of N_2 and n_1 are equal, and may be placed equal to each other; thus, $\frac{D_1 N_1}{F_1} = \frac{F_2 n_2}{D_2}$, or, multiplying by F_1 and D_2, $N_1 D_1 D_2 = n_2 F_1 F_2$. **(137.)**

1480. That is, *the speed of the first pulley, multiplied by the diameter of each of the drivers, equals the speed of the last pulley, multiplied by the diameter of each follower.*

This formula is in most cases convenient to apply as it stands.

EXAMPLE.—Referring to Fig. 371, let the diameters of the drivers be 32 in., the diameter of the first follower be one foot, and of the second follower 15 inches. If the first shaft has a speed of 60 revolutions per minute, what is the speed of the last shaft?

SOLUTION.—Substituting in formula **137**, $60 \times 32 \times 32 = n_2 \times 12 \times 15$, or dividing by 12×15, $n_2 = \frac{60 \times 32 \times 32}{12 \times 15} = 341\frac{1}{3}$ rev. per min. Ans.

EXAMPLE.—An emery grinder is to be set up to run at 1,200 revolutions per minute. The countershaft (corresponding to the middle shaft in Fig. 371) has pulleys 20 and 8 inches in diameter. If the pulley on the grinder is 6 inches in diameter, what size pulley must be used on the main line shaft, its speed being 180 revolutions per minute?

SOLUTION.—Substituting in formula **137**, $180 \times D_1 \times 20 = 1{,}200 \times 8 \times 6$, or $D_1 = \frac{1{,}200 \times 8 \times 6}{180 \times 20} = 16$ inches. Ans.

1481. When the speeds of the first and last shafts are given, and the diameters of all the pulleys are to be found, the following method is convenient:

Rule.—*Divide the higher speed by the lower. If two pulleys are to be used, this will be the ratio of their diameters.*

If four pulleys are required, find two numbers whose product equals the above quotient. One of these numbers will be the ratio of the diameters of one pair of pulleys, and the other number of the other pair.

EXAMPLE.—It is required to run a machine 1,600 revolutions per minute, the driving shaft making 320 revolutions per minute. What size pulleys are required, (*a*) when two pulleys are used; (*b*) when four pulleys are used?

SOLUTION.—(*a*) $1{,}600 \div 320 = 5$. The two pulleys must, therefore, be in the ratio of 5 to 1, the driving pulley being 5 times as large as the driven pulley, since the latter has the greater speed. We will assume diameters of 30 and 6 inches.

(*b*) $2\frac{1}{2} \times 2 = 5$. One pair of pulleys must be in the ratio of $2\frac{1}{2}$ to 1, and the other pair of 2 to 1. We will assume diameters of 25 and 10 inches for one pair, and of 12 and 6 inches for the other pair.

1482. Direction of Rotation.—It will be noticed, by referring to Fig. 371, that the pulleys are connected by **open belts** where indicated by full lines, and by **crossed belts** where indicated by dotted lines. *Pulleys connected by open belts turn in the same direction, and those connected by crossed belts in opposite directions.*

EXAMPLES FOR PRACTICE.

1. A driving pulley is 54 inches in diameter, and a driven pulley which runs at 112 revolutions per minute is $2\frac{1}{2}$ feet in diameter. What is the speed of the driving shaft? Ans. 62.22 rev. per min.

2. The fly-wheel of an engine running at 180 revolutions per minute is 8 ft. 5 in. in diameter. What should be the diameter of the pulley

which it drives, if the required speed of the latter is 600 revolutions per minute? Ans. $30\frac{5}{16}$ in., nearly.

3. In Fig. 371, let the diameters of the two drivers be 48 and 25 inches, and of the two followers 16 and 12 inches. If the last pulley's shaft rotates 800 times in 5 minutes, what is the speed per minute of the first shaft? Ans. 25.6 rev. per min.

4. If the first pulley in Fig. 371 turns right-handed, and is connected with the second by a crossed belt, and the third with the fourth by an open belt, in what direction would the last pulley turn? In what direction would it turn if two crossed belts were used?

5. A machine is to be belted through a countershaft, so as to run at 1,200 revolutions per minute, the speed of the driving shaft being 120 revolutions per minute. Find three ratios that could be used for each pair of pulleys.

Ans. $\begin{cases} 5 : 1 \text{ and } 2 : 1. \\ 4 : 1 \text{ and } 2\frac{1}{2} : 1. \\ 3\frac{1}{3} : 1 \text{ and } 3 : 1. \end{cases}$

6. An emery grinder is to be set to run at 1,400 revolutions per minute. The countershaft has pulleys 30 and 8 inches in diameter. The pulley on the grinder is 7 inches in diameter. What size pulley should be used on the main line shaft, its speed being 185 revolutions per minute? Ans. $14\frac{1}{8}$ inches.

POWER TRANSMISSION BY BELT.

1483. The Effective Pull.—In Fig. 372, let D and F be two pulleys connected by a belt, D being the driver and F the follower. To avoid undue slipping, the belt must be drawn tight. This will produce a tension in the upper and lower parts which we call T_2 and T_1, respectively.

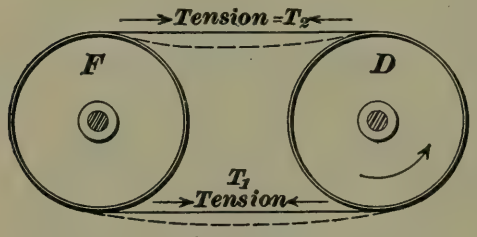

FIG. 372.

Suppose the two pulleys to be stationary and that the belt is put on with a certain tension. Then, T_1 will equal T_2. But if the pulley D should be turned in the direction of the curved arrow it would tend to stretch the lower part of the belt, increasing its tension still more, while the tension of the upper part would be diminished an equal amount. This would go on until the difference of the tensions was sufficient to start pulley F.

This difference $(T_1 - T_2)$ is the pull that does the work in transmitting power, and is called the effective pull. In any

case, therefore, the number of foot-pounds of work transmitted by a belt must equal the effective pull of the belt in pounds times the number of feet passed through; or, taking a minute as the unit of time, *the power transmitted in foot-pounds per minute = the effective pull × the velocity in feet per minute.*

1484. To show clearly how the effective pull enters into calculations of power transmissions, two examples will be solved.

EXAMPLE.—The diameter of the driving pulley D is 36 inches. It makes 150 revolutions per minute and carries a belt transmitting 6 horsepower. What is the effective pull of the belt?

SOLUTION.—Velocity of the belt in feet per minute =

$$\frac{150 \times 36 \times 3.1416}{12} = 1{,}413.72.$$

This, multiplied by the effective pull in pounds must equal the foot-pounds of work done per minute, or $6 \times 33{,}000$. Hence, letting P = the effective pull, and equating these expressions, we have

$$P \times 1{,}413.72 = 6 \times 33{,}000 = 198{,}000,$$

or $P = \frac{198{,}000}{1{,}413.72} = 140.06$ lb., nearly.

EXAMPLE.—A pulley 4 feet in diameter is driven at 100 revolutions per minute, and transmits power to another pulley by means of a belt without slip. If the tension on the driving side of the belt is 400 pounds, and on the slack side is 100 pounds, what is the horsepower transmitted?

SOLUTION.—$P = (T_1 - T_2) = 400 - 100 = 300$ lb. Horsepower transmitted $\times$ 33,000 = foot-pounds of work done per minute; or

$$\text{H.P.} \times 33{,}000 = 300 \times 100 \times 4 \times 3.1416, \text{ whence}$$

$$\text{H. P.} = \frac{300 \times 100 \times 4 \times 3.1416}{33{,}000} = 11.424. \quad \text{Ans.}$$

1485. To Determine the Width of Belt.—A belt should be wide enough so that it will bear safely and for a reasonable length of time the greatest tension that will be put upon it. This will be the tension T_1 of the driving side of the belt. As belts are usually laced, or fastened with metallic fasteners, both of which require holes to be punched in the ends, it is customary to use the breaking strength through the lace holes, divided by a suitable factor of safety, as the greatest allowable tension. The average breaking strength for single leather belts, through the lace

holes, is 200 pounds per inch of width. This divided by three, which is a suitable factor of safety for belting, gives $66\frac{2}{3}$ pounds. Thus, in the last example, the tension of the driving side of the belt was assumed to be 400 pounds. Hence, using $66\frac{2}{3}$ pounds as the safe working stress per inch of width, a belt $\frac{400}{66\frac{2}{3}} = 6$ inches wide would be required.

This tension T_1, for any particular case, depends upon three things—viz., the effective pull of the belt, the coefficient of friction between the belt and pulley, and the size of the arc of contact of the belt on the smaller pulley. As the equations involving these quantities are somewhat complicated, Table 33 has been calculated. It will afford a convenient means for finding not only the width of belt for a given horsepower, but the horsepower for a given width as well. In the first column, the arc covered by the belt is stated in degrees, and in the second column in fractional and decimal parts of the circumference covered. The third column gives the greatest allowable values of $(T_1 - T_2)$, or the effective pull, per inch of width, for single leather belts having any arc of contact. It was computed by assuming a value for T_1 of $66\frac{2}{3}$ pounds, and a coefficient of friction of .27. This latter has been found by experiment to be a fair value to use for leather belts running over cast iron pulleys, under conditions met with in practice.

TABLE 33.

Arc Covered by Belt.		Allowable Value of Effective Pull, or $(T_1 - T_2)$ per Inch of Width.
Degrees.	Fraction of Circumference.	
90	$\frac{1}{4} = .25$	23.0
$112\frac{1}{2}$	$\frac{5}{16} = .312$	27.4
120	$\frac{1}{3} = .333$	28.8
135	$\frac{3}{8} = .375$	31.3
150	$\frac{5}{12} = .417$	33.8
$157\frac{1}{2}$	$\frac{7}{16} = .437$	34.9
180 or over.	$\frac{1}{2} = .50$	38.1

1486. To use the table in finding the width of a single leather belt required for transmitting a given horsepower, we have the following rule :

Rule.—*Compute the effective pull of the belt. Divide the result by the suitable effective pull per inch of width, as given in Table 33; the quotient will be the width of belt required, in inches.*

EXAMPLE.—What width of single belt is needed to transmit 20 horsepower with contact on the small pulley of $\frac{5}{8}$ of the circumference and a speed of 1,500 feet per minute ?

SOLUTION.—First finding the effective pull, $P \times 1{,}500 = 20 \times 33{,}000$,

$$P = \frac{20 \times 33{,}000}{1{,}500} = 440.$$

Hence, $440 \div (T_1 - T_2)$, from the table, $= \frac{440}{31.3} = 14$ inches, nearly. A 14-inch belt would be used. Ans.

1487. To Determine the Horsepower that a Belt Will Transmit.—The process for a single belt must evidently be just the reverse of the preceding. It is as follows:

Rule.—*Multiply together a suitable value for the effective pull, taken from Table 33, the width of the belt in inches, and its velocity in feet per minute. The result divided by 33,000 will be the horsepower that the belt will transmit.*

EXAMPLE.—What horsepower will a one-inch belt transmit with a speed of 900 feet per minute and an arc of contact of 180° ?

SOLUTION.—$T_1 - T_2$, from the table, $= 38.1$. $38.1 \times 1 \times 900 = 34{,}290$, which, divided by 33,000, gives 1.04 horsepower, nearly. Ans.

1488. General Rule for Belting.—From the last example, we see that *a single belt traveling 900 feet a minute will transmit one horsepower per inch of width when the arc of contact on the smaller pulley does not vary much from 180°.* This is used by many engineers as a general rule for belting, to be applied to all cases.

The following three formulas express the operations that would be performed in applying this rule:

Let H = horsepower to be transmitted;
W = width of belt in inches;
S = belt speed in feet per minute.

Then, $$H = \frac{WS}{900}. \qquad \textbf{(138.)}$$

$$W = \frac{900\,H}{S}. \qquad \textbf{(139.)}$$

$$S = \frac{900\,H}{W}. \qquad \textbf{(140.)}$$

EXAMPLE.—Two pulleys, 48 inches in diameter, are to be connected by a single belt, and make 200 revolutions per minute. If 40 horsepower is to be transmitted, what must be the width of belt?

SOLUTION.—The belt speed $= \frac{200 \times 48 \times 3.1416}{12} = 2{,}513$ feet per minute, about. Applying formula **139**, $W = \frac{900 \times 40}{2{,}513} = 14.3$ inches. Ans.

A 14-inch belt might safely be used, since the rule gives a liberal width when the pulleys are of equal size.

EXAMPLE.—What size pulleys should be used for a 4-inch belt, which is to connect two shafts running at 400 revolutions per minute and transmit 14 horsepower? Both pulleys are of the same size.

SOLUTION.—By formula **140**, $S = \frac{900 \times 14}{4} = 3{,}150$ feet per minute. Since this speed = the circumference of the required pulley in feet $\times$ 400, we have circumference of pulley $= \frac{3{,}150 \times 12}{400} = 94.5$ inches; diameter $= \frac{94.5}{3.1416} = 30$ inches. Ans.

1489. Double Belts.—Double belts are made of two single belts cemented and riveted together their whole length, and are used where much power is to be transmitted. As the formulas for single belts are based upon the strength through the rivet holes, a double belt, which is twice as thick, should be able to transmit twice as much power as a single belt, and, in fact, more than this, where, as is quite common, the ends of the belt are glued instead of being laced.

Where double belts are used upon small pulleys, however, the contact with the pulley face is less perfect than it would be if a single belt were used, owing to the greater rigidity of the former. More work is also required to bend the belt as it runs over the pulley than in the case of the thinner and more pliable belt, and the centrifugal force tending to throw the belt from the pulley also increases with the thickness. Moreover, in practice, it is seldom that a double belt is put on with twice the tension of a single belt. For these reasons, the width of a double belt required to transmit a given horsepower is generally assumed to be seven-tenths the width of a single belt to transmit the same power. Upon this basis, formulas **138, 139,** and **140** become, for double belts,

$$H = \frac{WS}{630}. \qquad \textbf{(141.)}$$

$$W = \frac{630\,H}{S}. \qquad \textbf{(142.)}$$

$$S = \frac{630\,H}{W}. \qquad \textbf{(143.)}$$

EXAMPLES FOR PRACTICE.

1. If the effective pull on a belt per inch of width is 50 pounds, and the belt passes over a pulley 36 inches in diameter, which makes 160 revolutions per minute, how wide should the belt be to transmit 12 horsepower? Ans. $5\frac{1}{4}$ inches.

2. What width of single belting should be used to transmit 5 horsepower, when the belt speed is 2,000 feet per minute, and the arc of contact on the smaller pulley is 90°? Ans $3\frac{1}{2}+$ inches.

3. Using the general rule, find the horsepower that a 16-inch single belt will transmit, the belt speed being 1,000 feet per minute.
Ans. 17.8 H. P.

4. Calculating from Table 33, how much power could the above belt be depended upon to transmit if the arc of contact on the smaller pulley is $\frac{1}{8}$ of the circumference? Ans. 14 H. P., nearly.

5. Required the diameter of pulleys necessary to enable a 10-inch belt to transmit 9 horsepower at 125 revolutions per minute, both pulleys being of the same size. Ans. 2 ft., nearly.

6. How much power would the belt in example 3 transmit, if the belt were double? Ans. 25.4 H. P., nearly.

SPEED CONES.

1490. Speed cones are used for varying the velocity of a shaft or other rotating piece driven by a belt. Their method of operation will be clearly seen in Figs. 373 to 376.

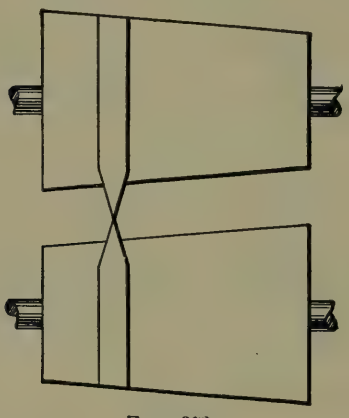

FIG. 373.

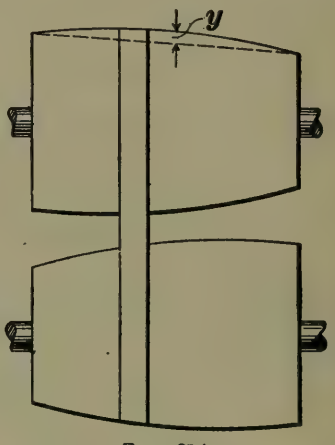

FIG. 374.

Figs. 373 and 374 show continuous cones and conoids, respectively, the former being suitable for crossed, and the latter for open belts, where the speed of the driver shaft can be raised gradually by shifting the belt. Figs. 375 and 376 show sets of stepped pulleys. As flat belts tend to climb

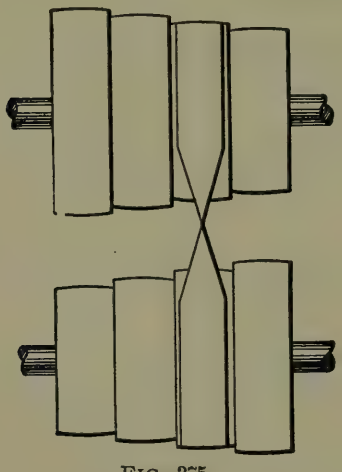

FIG. 375.

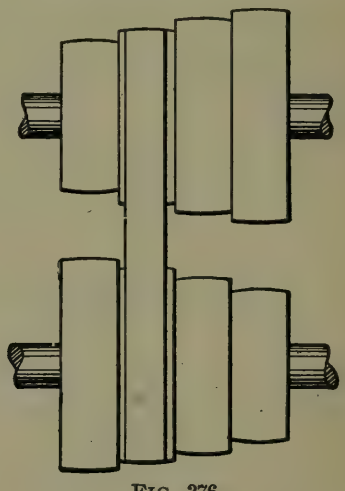

FIG. 376.

a conical pulley, continuous cones or conoids require special provision for keeping the belt in place. For this reason the stepped cones are generally used. Whenever

possible, it is desirable to have both pulleys alike, so that they can be cast from one pattern, and in what follows it will be assumed that this is to be done.

1491. Continuous Cones for Crossed Belts.—Let A and B, in Fig. 377, represent two speed cones of the same size, having the diameters of the large and small ends equal to D and d, respectively. A is the driver, and revolves at a constant number of revolutions N, while the speed of B is n_1 or n_2, according as the belt runs at the small or large end.

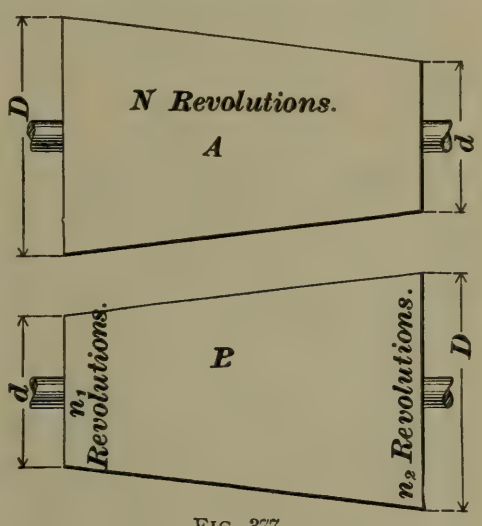

FIG. 377.

It is assumed that pulley B is to have a range of speeds between n_1 and n_2 revolutions, n_1 being the greater.

Since A and B are to be of the same size, it will be found that a certain relation must exist between N and n_1 and n_2 as follows:

From formula **136**,

$$N D = n_1 d, \text{ or } D = \frac{n_1 d}{N}, \qquad \textbf{(144.)}$$

$$\text{and } N d = n_2 D, \text{ or } D = \frac{N d}{n_2}. \qquad \textbf{(145.)}$$

Equating **144** and **145**, $\frac{n_1 d}{N} = \frac{N d}{n_2}$, or

$$N = \sqrt{n_1 n_2}. \qquad \textbf{(146.)}$$

That is, N must equal the square root of the product of n_1 and n_2.

1492. Having determined N, the relation between D and d can be found. From **144** and **145** we have:

$$N = \frac{n_1 d}{D} \text{ and } N = \frac{n_2 D}{d}.$$

Equating, $\frac{n_1 d}{D} = \frac{n_2 D}{d}$, or $n_1 d^2 = n_2 D^2$.

Hence, $$D = d\sqrt{\frac{n_1}{n_2}}. \qquad \textbf{(147.)}$$

That is, the large diameter must equal the small diameter, multiplied by the square root of the quotient of n_1 divided by n_2.

1493. Speed cones, to be properly designed, should have their diameters at different points, so proportioned that the belt will always have the same length, when tightly drawn, whatever its position. Let d and D' represent the diameters of two pulleys, connected by a crossed belt, whose centers are O and C, respectively. (See Fig. 378.) The length of the belt is $2AB$ + the length of the arcs from F to A and B to E. These arcs subtend equal angles, and supposing each to contain x degrees, the length of the belt $= 2AB + 3.1416\,(d + D')\frac{x}{360}$, there being 360 degrees in a circle. Now, draw a line GH parallel to AB, and, about O and C as centers, describe dotted circles whose diameters are d' and D tangent to GH, representing two other pulleys. Then, for the length of the belt, we have $2GH\ (=2AB) + 3.1416\,(d' + D)\frac{x}{360}$. But $(d' + D) = (d + D')$, since what was taken from D' to make D was added to d to make d'. Hence, the length of the belt in each case is the same, and we have the rule that *for crossed belts the sum of the corresponding diameters of two speed cones should be the same at all points.*

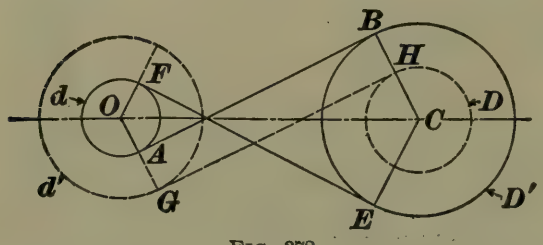

FIG. 378.

From this it follows that if two cones not exactly alike are to be driven by cross belt, it is only necessary to see that the sum of the diameters remains the same.

EXAMPLE.—Two continuous speed cones are to be designed to give a range of speed between 100 and 700 revolutions per minute. They are both to be alike in all respects. What must be the speed of the driving shaft, and the large diameter of the cones, assuming the small diameter to be 4 inches?

SOLUTION.—From formula **146**, $N = \sqrt{n_1 n_2} = \sqrt{100 \times 700} = \sqrt{70{,}000} = 264.57+$ revolutions per minute. Ans.

From formula **147**, $D = d\sqrt{\frac{n_1}{n_2}} = 4\sqrt{\frac{700}{100}} = 4 \times 2.645 = 10.58$ inches. Ans.

1494. When an open belt is used, the values of N, D, and d are calculated as above, but for the other diameters a different rule is required. In Fig. 379, which is similar to Fig. 378, the pulleys are connected by an open belt. The figure is drawn so that $D + d = D' + d'$, the circles D' and d' being made equal to represent the middle sections of two cones. It is evident that the belt over D and d is longer than the one over D' and d'. Hence, we see that the middle sections of speed cones for open belts must be larger proportionately than for crossed belts. This is indicated by y in Fig. 374. Calling this middle diameter M, and letting C be the distance in inches between the centers of the two shafts, upon which the cones are placed, it can be shown that

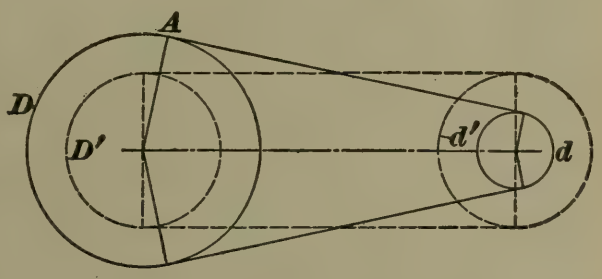

FIG. 379.

$$M = \frac{D+d}{2} + \frac{.08\,(D-d)^2}{C}. \qquad \textbf{(148.)}$$

As the proof is a long one it will not be given. Having thus determined the end and middle diameters, the curve of the conoid may be taken as the arc of a circle passing through the extremities of the three diameters.

EXAMPLE.—What should be the middle diameter for the speed cone of the last example, having end diameters of 4 and 10.58 inches, when an open belt is to be used? The distance between centers is 50 inches.

SOLUTION.—From formula **148**,

$$M = \frac{10.58+4}{2} + \frac{.08\,(10.58-4)^2}{50}$$

$$= 7.29 + .07 = 7.36 \text{ inches.} \quad \text{Ans.}$$

1495. Stepped Pulleys.—When stepped pulleys, or cone pulleys, as they are more commonly called, are to be used, continuous cones should first be laid out as described, like *A B C D*, in Fig. 380. Then draw as many diameters, at equal distances apart, as there are to be steps in the cone plus 1, as *A D*, *E F*, etc. These will serve as center lines for the different steps, which are to be drawn through the intersections of the above diameters, with the outside lines *A B* and *D C*, in the manner indicated.

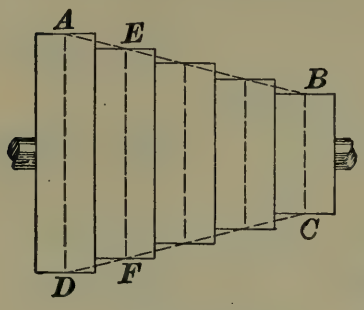

FIG. 380.

1496. It should be noted that, when speaking of a cone pulley as having a certain number of steps, the number of steps is one less than the number of pulleys on the cone. Thus, the cone, in Fig. 380, is a 4-step cone, and has five pulleys. Consequently, if a cone pulley (or cone) is spoken of as having five steps, there are six pulleys and six changes of speed.

If the distance between the axes of the pulleys to be connected by open belt be great, or if, as is sometimes the case, one of the axes be adjustable (the proper tension on the belt being obtained by the weight of the pulley on the adjustable axis), the diameters can be calculated as though the belt were crossed. Otherwise, when designed for open belts they should be laid out as before described.

EXAMPLES FOR PRACTICE.

1. Two continuous speed cones are required to give a range of speed between 100 and 600 revolutions per minute. Assuming the large diameters of the cones to be 14 inches, (*a*) what must be the small diameters, and (*b*) the speed of the driving shaft? Both cones are to be alike.

Ans. { (*a*) 5.71 inches. (*b*) 244.95 rev.

2. In the above example, if the speed of the driving shaft were 260 revolutions per minute, and the slowest speed of the driven cone 140 revolutions, (*a*) what would be the greatest speed of the driven cone? (*b*) What would be the ratio of the large and small diameters of the cones?

Ans. { (*a*) 482.86 rev. (*b*) 1.86 : 1.

3. What should be the middle diameter for the speed cones of example 1, when an open belt is used, the distance between centers being 30 inches? Ans. 10.04 inches.

THE CARE AND USE OF BELTING.

1497. Belts most commonly used are of leather, single and double. Canvas belts covered with rubber are sometimes used, especially in damp places, where the moisture would ruin the leather.

Leather belts are generally run with the hair, or grain, side next the pulley. This side is harder and more liable to crack than the flesh side. By running it on the inside the tendency is to cramp or compress it as it passes over the pulley, while, if it ran on the outside, the tendency would be for it to stretch and crack. Moreover, as the flesh side is the stronger side, the life of the belt will be longer if the wear comes upon the weaker or grain side.

1498. The lower side of a belt should be the driving side, the slack side running from the top of the driving pulley. The sag of the belt will then cause it to encompass a greater length of the circumference of both pulleys, as illustrated by the dotted lines in Fig. 372. Long belts, running in any direction other than the vertical, work better than short ones, as their weight holds them more firmly to their work.

It is bad practice to use rosin to prevent slipping. It gums the belt, causes it to crack, and prevents slipping for only a short time. If a belt properly cared for persists in slipping, a wider belt or larger pulleys should be used, the latter to increase the belt speed. Belts, to be kept soft and pliable, should be oiled with castor or neatsfoot oil. Mineral oils are not good for the purpose.

1499. Tightening or guide pulleys, whenever used to increase the length of contact between the belt and pulley or to tighten a belt, should be placed on the slack side, if possible. Thus placed, the extra friction of the guide pulley bearings and the wear and tear of the belt that would result from the greater tension of the driving side are avoided.

1500. Guiding Belts.—When belts are to be shifted from one pulley to another, or must be guided to prevent running off the pulley, the fork, or other device used for guiding, should be close to the driven pulley, and so placed as to guide the advancing side of the belt.

This principle is sometimes made use of where pulleys have flanges to keep the belt on the pulleys. Where constructed with straight flanges, as in Fig. 381, if the belt has any inclination to run on one side, its tendency is to crowd up against the flange as shown at *a*, *a*. When constructed as in Fig. 823,

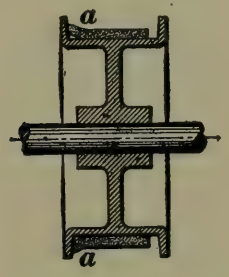

FIG. 381.

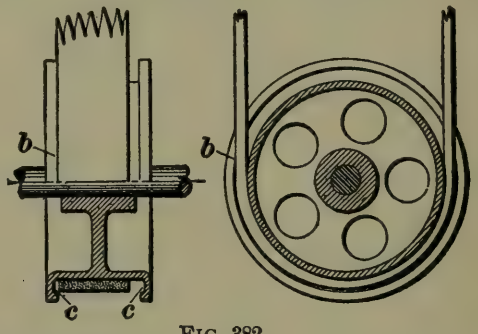

FIG. 382.

however, with the flanges grooved as at *c*, *c*, the advancing side of the belt will be guided at *b*, just as it reaches the pulley, by contact with the thick portion of the flange, and during the rest of the way will not touch the flange at all.

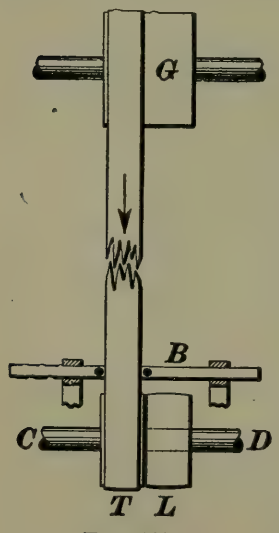

FIG. 383.

1501. In Fig. 383, is shown the arrangement for a belt shipper. *G* is the driving pulley and *T* and *L* are tight and loose pulleys on the driven shaft *C D*. *B* is the shipper, and can be moved parallel with *C D*. The acting surface, or *face*, of *G* is made straight to allow the belt to shift readily, and the faces of *T* and *L* are crowned, so that the belt will not tend to run off.

1502. The Climbing of Belts.—In Fig. 384, suppose the shafts *a*, *a* to be parallel, and the pulley *A* to be cone-shaped. The right-hand side of the belt will be pulled ahead more rapidly than the left-hand side,

because of the greater diameter and consequently greater speed of that part of the pulley. The belt will, therefore, leave its normal line at *c*, and climb to the "high" side of the pulley. This tendency is taken advantage of by crowning pulleys in the middle. Each side of the belt then tends to move towards the middle of the pulley; that is, the tendency is for the belt to stay on the pulley.

Suppose, on the other hand, the shafts *b*, *b* not to be parallel, the right-hand ends being nearer together. The belt will in that case pass spirally on the pulley *B* towards the "low" side.

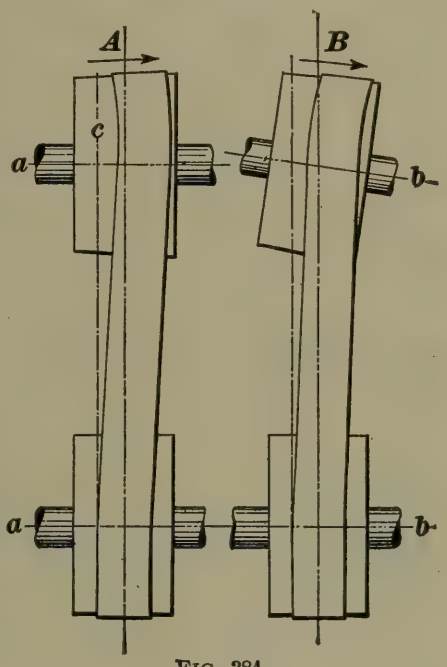

FIG. 384.

1503. Belt Fastenings.—There are many good methods of fastening the ends of belts together, but lacing is generally used, as it is flexible like the belt itself, and runs noiselessly over the pulleys. The ends to be laced should be cut squarely across and the holes in each end for the lacings should be exactly opposite each other when the ends are brought together. Very narrow belts, or belts having only a small amount of power to transmit, usually have only one row of holes punched in each end, as in Fig. 385. *A* is the outside of the belt, and *B* the side running next the pulley. To lace, the lacing should be drawn half way through one of the middle holes, from the under side, as at *1*. The upper end should then be passed through *2*, under the belt and up

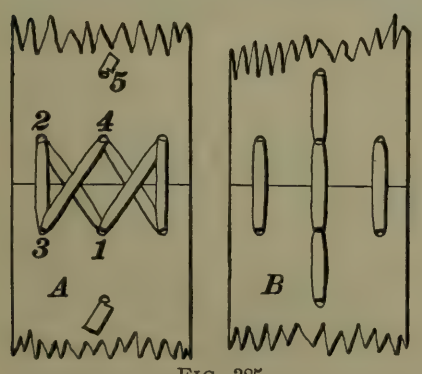

FIG. 385.

through *3*, back again through *2* and *3*, through *4* and up through *5*, where an incision is made in one side of the lacing, forming a barb that will prevent the end from pulling through. The other side of the belt is laced with the other end, it first passing up through *4*. Unless the belt is very narrow, the lacing of both sides should be carried on at once.

1504. Fig. 386 shows a method of lacing where double lace holes are used, *B* being the side to run next the pulley. The lacing for the left side is begun at *1*, and continues through *2*, *3*, *4*, *5*, *6*, *7*, *4*, *5*, etc. A 6-inch belt should have seven holes, four in the row nearest the end, and a 10-inch belt, nine holes. The edge of the holes should not be nearer than $\frac{3}{4}$ of an inch from the sides; and the holes should not be nearer than $\frac{7}{8}$ of an inch from the ends of the belt. The second row should be at least $1\frac{3}{4}$ inches from the end.

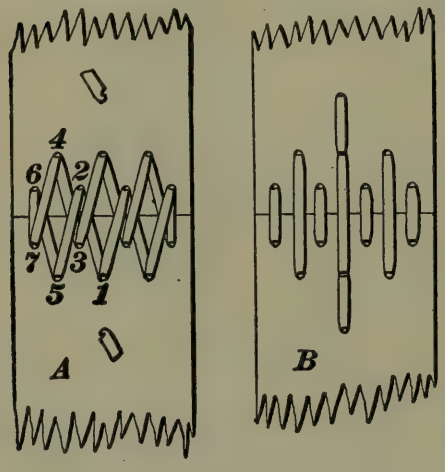

FIG. 386.

Another method is to begin the lacing at one side instead of in the middle. This method will give the rows of lacing on the under side of the belt the same thickness all the way across.

BELTS TO CONNECT NON-PARALLEL SHAFTS—GUIDE PULLEYS.

1505. It very frequently happens that one shaft must drive another at an angle with it. Sometimes this involves the use of guide pulleys, and occasionally guide pulleys must be used to connect parallel shafts, where the shafts are near together, or there is some obstruction in the way. In all these cases, however, we have the general principle that *the point at which the center of the belt is delivered from each pulley must lie in the middle plane of the other pulley.*

The middle plane of a pulley, it will be understood, is a plane through the center of the pulley, perpendicular to its axis.

Unless the shafting is to turn backwards at times, it is immaterial in what direction a belt *leaves* a pulley; but it must always be *delivered* into the plane of the pulley towards which it is running. If it is necessary for a belt to run backwards as well as forwards, it must *leave* in the plane of the pulley, also. This principle applies to the guide pulleys as well as to the main pulleys.

1506. Shafts at Right Angles. —One of the most frequent cases met with is that of two shafts at right angles, but not intersecting, and the common method of connecting them is by means of a **quarter-turn belt,** shown in Fig. 387. Here, D is the driver, revolving in the direction shown, and F is the follower. The point at which the belt is delivered from the pulley D lies in the middle plane of the pulley F, that is, in the line $b\ b$; also, the point at which the belt is delivered from the pulley F lies in the middle plane of the pulley D, or in the line $a\ a$. Thus arranged, the pulleys cannot run backwards, because d, the point of delivery of F, is not in the middle plane $a\ a$, and e is not in the middle plane $b\ b$.

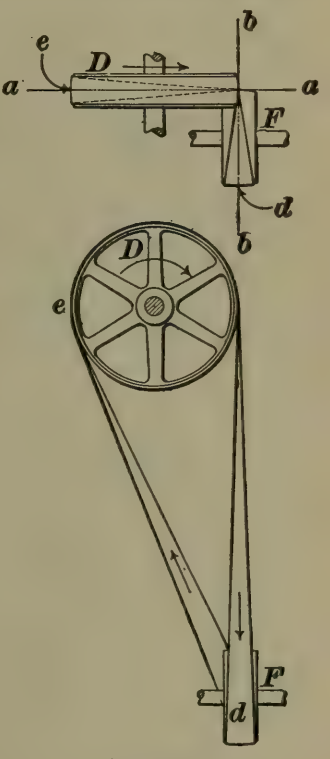

FIG. 387.

1507. The following simple method of locating the pulleys for a quarter-turn belt may be used in practice: Let D, Fig. 387, be the driving pulley, and F the follower or driven pulley, which drives a machine. Locate the pulley D and the machine so that the pulleys D and F will be as near the correct position as can be judged by the eye. Using a plumb-bob, drop a plumb-line from the center of the right-hand side of the pulley D, and move the machine until the center of the *back* side of the pulley F touches the

plumb-line. In case it should not be convenient to move the machine, shift the pulleys instead. If it be desired to run the belt in the opposite direction to that indicated by the arrow in Fig. 387, shift the machine carrying F to the left until the center of the *front* side of the pulley F touches a plumb line dropped from the center of the left-hand side of the pulley D; that is, from the point e.

1508. There is the objection to a quarter-turn belt that, when the angle at which the belt is drawn off the pulleys is large, the belt is strained, especially at the edges, and it does not hug the pulleys well. Small pulleys placed quite a distance apart, with narrow belts, give the best results, from which it follows that quarter-turn belts, like the foregoing, are not well suited to transmit much power. Fig. 388 shows how the arrangement can be improved by placing a guide pulley against the loose side of the belt. The driver D revolves in a left-handed direction, making $a\ b$ the driving or tight side of the belt. To determine the position of the guide pulley, select some point in the line $a\ b$, as d; draw lines $c\ d$ and $e\ d$; the middle plane of the guide pulley should then pass through the two lines. Looked at from a direction at right angles to pulley F, line $c\ d$ coincides with $a\ b$; looking at right angles to pulley D, line $e\ d$ coincides with $a\ b$.

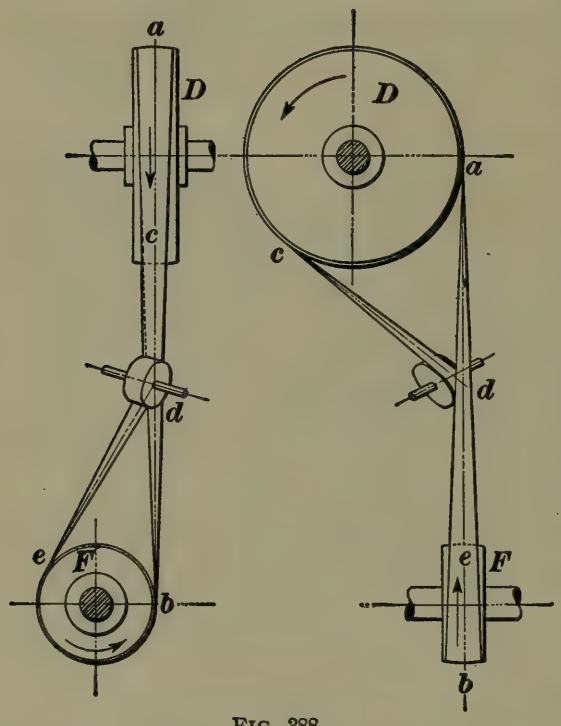

FIG. 388.

1509. A third form of belting for connecting two shafts at right angles consists of pulleys placed as in Fig. 389.

In general, it is to be preferred to the quarter-turn belts. D is the driver. The belt passes around the loose pulley L, and up again around a loose pulley on the driving shaft back

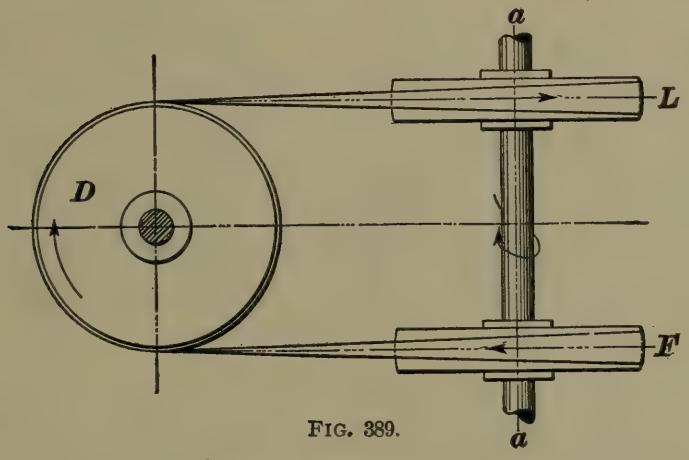

FIG. 389.

of D. It then goes down, around F, which is fast upon the shaft a a, and finally up again and around D. Since the loose pulleys revolve in a direction opposite to that of their shafts,

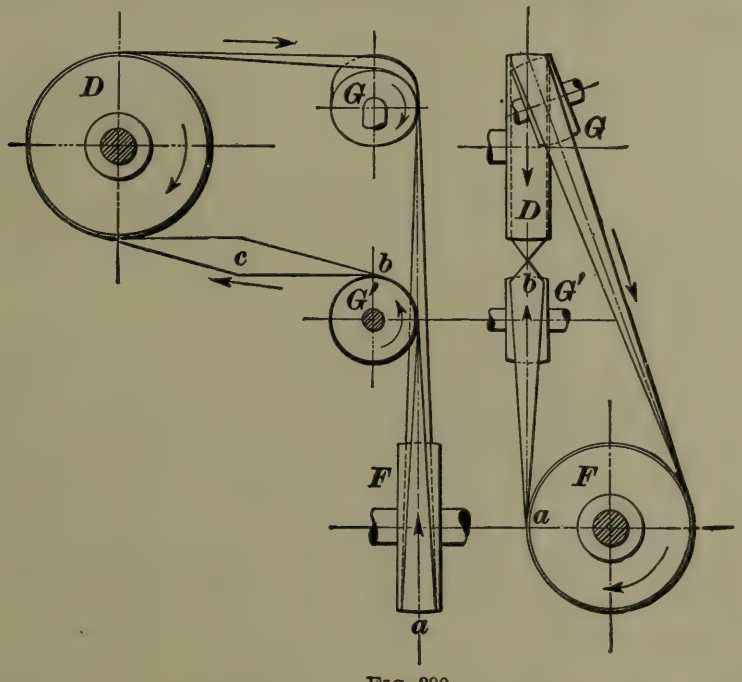

FIG. 390.

their hubs should be long. The two pulleys on each shaft must be of the same size. It is evident that either F or D can be the driver, and run in either direction.

It is to be observed that while a quarter-turn belt can be used with the shafts at an angle other than a right angle, the last arrangement cannot.

1510. In Fig. 390 is shown a method of connecting the shafts when it is not possible to put the follower F directly under D. The guide pulleys G, G' must be so placed that the belt will lead correctly from the point a into the middle plane of the guide pulley G', from b into the middle plane of D, and so on around. By twisting the belt at c, the same side will come in contact with all the pulleys; this is a desirable arrangement.

1511. We now come to a case that is different from the preceding, in that the shafts A and B, Fig. 391, would

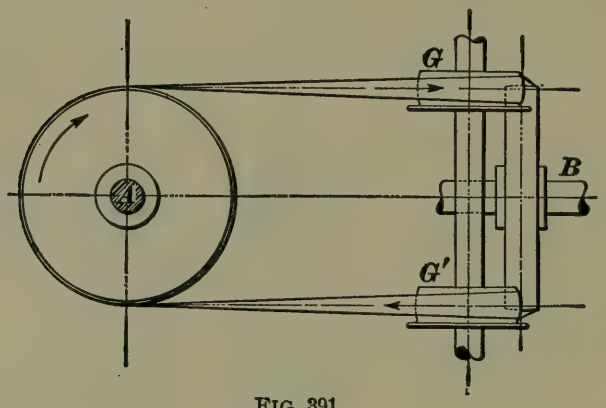

FIG. 391.

intersect, if long enough, as, for example, where shafting running on two sides of a room is to be connected. Guide pulleys, like those in the figure, termed **mule pulleys,** are used. As their planes are horizontal, means must be provided to prevent the belt from running off at the bottom. Sometimes this is done by simply crowning the pulley, and sometimes by putting flanges on the lower sides.

1512. Other Examples of Belt Transmission.— Guide pulleys are sometimes used to lengthen the belt between two shafts which are too close together to be

connected directly, or it may be that it is not possible to get two pulleys in the same plane. Fig. 392 shows an arrangement of this kind. The diameter of the guide pulleys should equal the distance between the planes of *D* and *F*. With the guide pulleys arranged as shown, the belt will run in both directions. It is more convenient, however, to place them on one shaft. In that case their axes would be on the line *O O'*. *G'* would have to be in the line *C K*, and *G* in the line *A B*. Then the belt would be delivered from *D* into the middle plane of *G'*, and from *G* into the middle plane of *F*. The belt would run in only one direction, however.

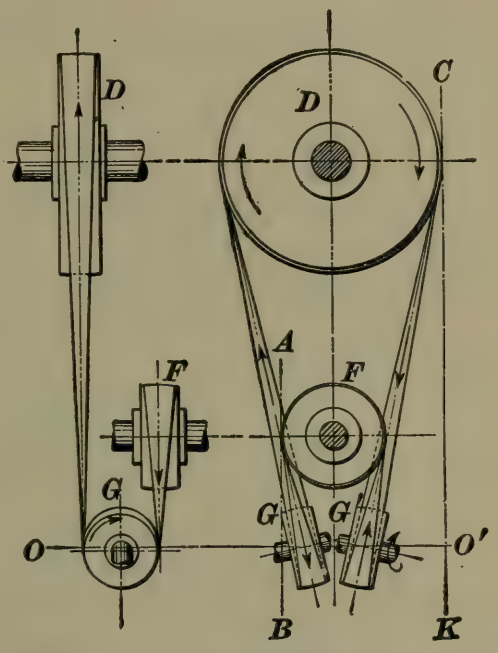

Fig. 392.

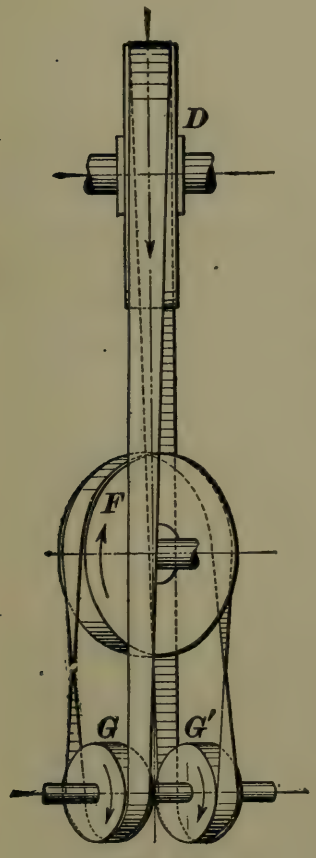

Fig. 393.

1513. A device for connecting two horizontal shafts making an angle with each other is given in Fig. 393. It can be used where a quarter-turn belt would not work successfully. The guide pulleys turn in the same direction, which is a convenience, because they can then be mounted on one shaft, turning in bearings at the ends, and the belt will run in either direction.

WHEELS IN TRAINS.

1514. The principles relating to the velocity ratio of pulleys connected by belting apply to any series of wheels arranged in a train. Where gears are used, however, the relative proportions of the wheels may be stated in terms of the numbers of teeth, instead of in terms of their diameters, if desired. Moreover, in any one train, it is only necessary that the proportions of each pair of wheels be stated in the same terms; different pairs may be given in different terms.

For example, take a train of four axes or shafts and six wheels, as in Fig. 394. Four of the wheels are gear-wheels,

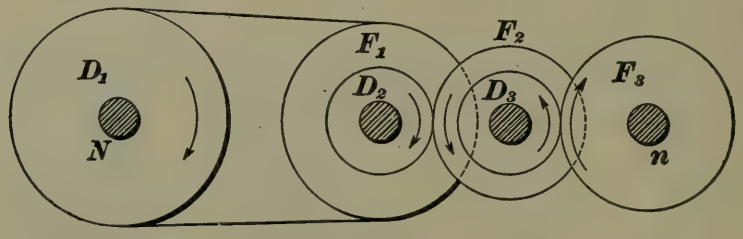

FIG. 394.

represented by their pitch lines, and two are pulleys connected by a belt. Let D_1, D_2, etc., denote the drivers, and F_1, F_2, etc., the followers, N the number of revolutions of D_1, and n the number of revolutions of F_3.

Suppose D_1 to be 40 inches in diameter and F_1 35 inches, D_2 to have 54 teeth, and F_2 60 teeth; D_3 to be 1 foot in diameter, and F_3 2 feet. What is the speed of F_3 if $N = 100$?

Placing the product of the drivers $\times$ the speed of the first shaft = the product of the followers $\times$ speed of the last shaft, $100 \times 40 \times 54 \times 1 = n \times 35 \times 60 \times 2$. Hence,

$$n = \frac{100 \times 40 \times 54 \times 1}{35 \times 60 \times 2} = 51\tfrac{3}{7} \text{ rev. per min.} \quad \text{Ans.}$$

It is evident that the arrangement of the drivers and followers is indifferent, and that they may be interchanged among themselves. It should be noticed, however, that if the diameter of one driver be given in inches, the diameter of its follower must be given in inches, also, etc.

1515. Direction of Rotation.—Axes connected by gear wheels rotate in opposite directions, as though con-

nected by a crossed belt. Hence, *in a train consisting solely of gear wheels, if the number of axes be odd, the first and last wheels will revolve in the same direction; if the number be even, they will revolve in the opposite direction.*

It is evident that a pinion working in an internal gear is an exception to this rule. It will turn in the same direction as the gear.

1516. Idle Wheels.—In the train, in Fig. 394, shaft No. 3 carried two gears, one being driven by gear D_2 and the other driving F_3. Sometimes, however, only one intermediate gear is used, serving both as a driver and a follower. Such a wheel is called an **idle wheel,** or *idler, and while it affects the relative direction of rotation of the wheels it is placed between, it does not affect their velocity ratio.*

The following examples will illustrate this, as well as show a few ways in which idle wheels are used. One method of arranging the change gears on the end of an engine lathe for changing the speed of the lead screw, which is used to feed the tool in screw cutting, is shown in Fig. 395. D_1, the driver, receives motion from the lathe spindle, and F_2, the follower, is on the lead screw. The middle wheel, which is an idle wheel, acts both as a driver and follower, or as D_2 and F_1.

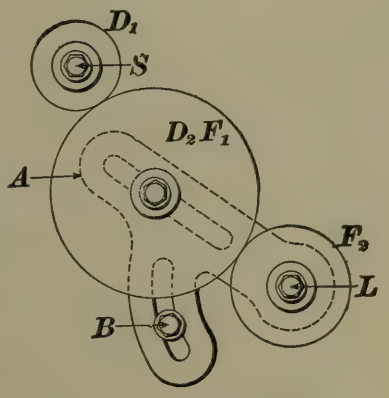

FIG. 395.

Letting N_1, represent the number of revolutions of D_1 and n_2 of F_2, we have, from formula **137,** $N_1 \times D_1 \times D_2 = n_2 \times F_1 \times F_2$. But, as D_2 and F_1 represent the same wheel, they have the same value, and $n_2 = \frac{N_1 D_1}{F_2}$. That is, the speed of F_2 is exactly the same as though no idle wheel was used.

1517. To change the speed of the lead screw, a different size wheel is put on in place of D_1, or F_2, or both. The idle wheel turns on a stud clamped in the slot in the arm A.

This stud can be moved in the slot to accommodate the different sizes of wheels on L, and to bring the wheel in contact with the gear on S, the arm is swung about L until in the right position, when it is clamped to the frame by the bolt B.

The way in which an idle wheel changes the direction of rotation is well shown in Fig. 396, which is a reversing mechanism, sometimes placed in the head stock of a lathe for reversing the feed. Here the idler I is in contact with D and F, making three axes, an odd number, so that D and F revolve in the same direction. Wheels I and I', however, are both pinioned on the plate P, which can swing about the axis of F, and are always in contact. Moreover, as plate P swings about its center, I must necessarily remain in contact with F. If the handle H be moved to the right, the plate will be revolved to the right, by means of the pin working in the slot in the lever L. The two idlers will take the dotted positions shown, and D will drive F through both of them. The number of axes will then be even, so that D and F will revolve in the opposite direction.

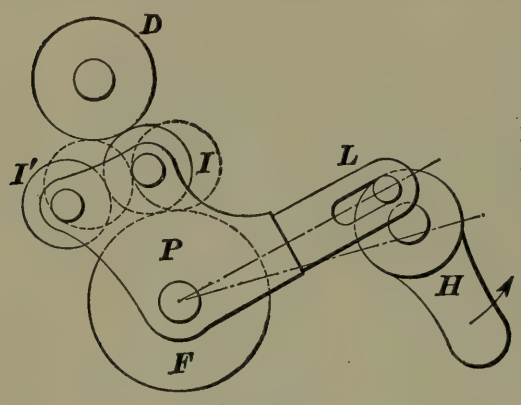

FIG. 396.

1518. Fig. 397 shows still another device in which an idle wheel is used, known as a **knee-joint.** If shaft A is fixed and shaft C is compelled by some arrangement, not shown, to move along a path, as $m\,n$, and at the same time it is desired to drive C from A, the connection can be made as

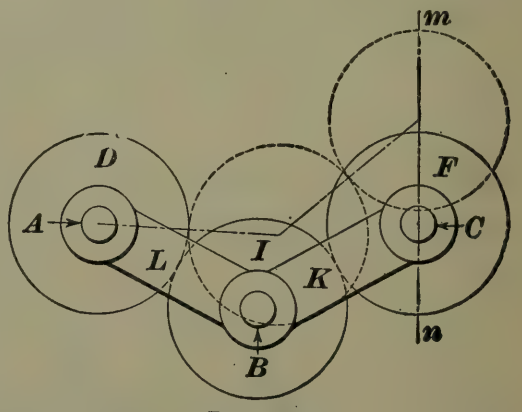

FIG. 397.

shown. Wheels D and F are fast to shafts A and C, and the idler I is supported by the links L and K, the ends of the links being loose upon shafts A, B, and C. Link L serves to keep D and I at the right distance from each other, and K serves the same purpose for I and F. The dotted lines show another position of the wheels. Among other applications of the knee-joint is one used to drive the rollers which deliver the ingot in a rolling mill to the rolls. These latter are ranged above one another in pairs, and the rollers have bearings in an iron frame, called the roll table, that is raised or lowered by hydraulic pressure, thus bringing the ingot in line with any pair of rollers. A familiar example of this train is seen in routing machines, pulleys and belts being used, however, in place of gears. The knee-joint is in reality an example of an epicyclic train, a description of which is to follow.

ENGINE LATHE TRAIN.

1519. Some of the best examples of wheels in trains are to be found in engine lathes. Fig. 398 represents the head-stock of an engine lathe, the spindle S turning in the bearings, as shown, and having a face-plate P, and a "center" on the right end for placing the work. The lead screw L, used in screw-cutting, is connected with the spindle by the train of gears on the left, which will be described later. The **back gears** F_1 and D_2, on the shaft m n, have been drawn above the spindle for convenience of illustration, instead of back of it, where they are really placed.

1520. Back Gear Train.—It is important to keep the cutting speed within limits that the tool will safely stand. For turning work of different diameters and material, therefore, the spindle must be driven at different speeds. This is accomplished by means of the cone pulley marked C, driven by a similar one on the countershaft by means of a belt, and by the back gears.

The gear F_2 is fast to the spindle and always turns with it. The cone C, however, is loose on the spindle, but can be made to turn with it by means of a lug, or catch, operated

by a nut under the rim of F_2. When the nut is moved out from the center, the lug engages with a slot on the large end of the cone. The cone will then revolve with the spindle, and as many changes of speed may be had as there

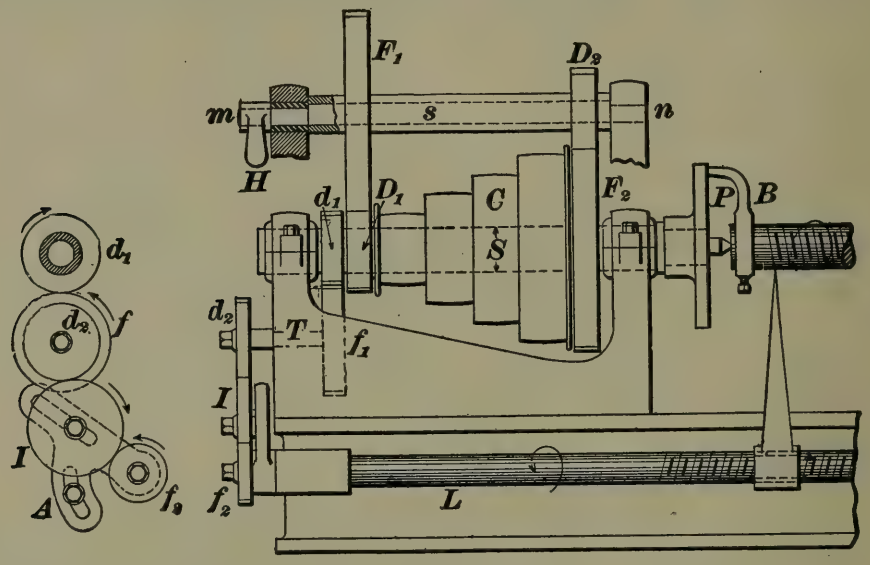

FIG. 398.

are pulleys on the cone. As ordinarily constructed, however, the cone alone does not give a range of speed great enough to include all classes of work, nor is the belt power sufficient for the larger work and heavier cuts. It makes the lathe more compact and satisfactory to construct the cone for the higher speeds and lighter work, and to obtain the speeds for the heavier work by means of back gears. Referring to the figure, it will be seen that the back gears are connected by the sleeve s, and so turn together, F_2 meshing with D_2, and D_1, which is loose upon the spindle but fastened to the cone, with F_1. To get the slower speeds, the nut mentioned before is moved in towards the center of F_2, disengaging the gear from the cone, which latter is now free to turn on the spindle. Hence, if the back gears are in mesh with the gears on the spindle, the belt will drive the spindle at a slower speed through the cone and the train $D_1\ F_1\ D_2\ F_2$.

The back gears cannot remain in gear when the cone and gear F_2 are connected; otherwise, the lathe would not start,

or teeth would be broken out of the wheels. To provide for throwing them in and out of gear, as required, the rod on which the back gears and sleeve s revolve is provided with eccentric ends at m and n, fitting in bearings in the frame. By turning the rod part way around by means of the handle H the gears can be thrown either in or out of gear.

1521. A lathe is spoken of as running **back geared** when the back gears are in, and as being in single gear when they are out of gear. This same arrangement, or a modification of it, is used on upright drills, boring mills, milling machines, and other machine tools.

1522. Screw Cutting.—One of the chief uses of engine lathes is for screw-cutting. In Fig. 398, the screw-cutting mechanism is driven from d_1, which is fast to the spindle. This connects with the lead screw L, through f_1, d_2, the idler I, and f_2. To cut a screw-thread, the work is placed between the centers of the lathe and made to turn with the face plate by the dog B, clamped to the end of the work. The spindle runs towards the operator, or in a right-hand direction, as looked at from the outer end of the head-stock, and the carriage, tool post, and tool, all of which are here represented by the pointer, are moved by the lead screw, on shears parallel with the axis of the spindle.

When cutting a right-hand thread, the tool must move from right to left, and from left to right when cutting a left-hand thread. Hence, to cut a right-hand screw with the gearing as arranged in the figure, a left-hand lead screw must be used. To cut a left-hand screw another idle wheel should be inserted in the connecting train, arrangements for which are usually provided. To cut screws of different pitch a set of gears is always furnished, any of which may be placed on the stud T, or the end of the lead screw. The method of adjustment to accommodate the different size gears by means of the vibrating slotted arm A has already been explained.

1523. Suppose the lead screw to have six threads to the inch, or a pitch of $\frac{1}{6}$ inch, and let it be required to

cut a screw of six threads per inch. If the gearing is such that the lead screw turns once while the spindle makes one turn, it is evident that the tool will cut six threads to the inch. If it is required to cut more than six threads to the inch, however, the lead screw must turn slower than the spindle; if less than six threads, it must turn faster than the spindle.

Now, the ratio between the speed of the spindle and the speed at which the lead screw must turn for cutting a certain number of threads per inch is simply the ratio between the number of turns made by the spindle and the number of turns made by the lead screw while the tool moves along one inch. This is evidently equal to the ratio of the number of threads per inch to be cut to the number of threads per inch on the lead screw. Thus, if 10 threads per inch are to be cut, and the lead screw has six threads per inch, the spindle must turn 10 times while the lead screw turns six times; if $4\frac{1}{2}$ threads are to be cut, it must turn $4\frac{1}{2}$ times to six turns of the lead screw.

The problem, then, is to determine what size gears should be placed on the stud and lead screw to give the latter the right speed for any case. Here, as heretofore, the principle must hold that the speed of the first driver, multiplied by each driver, equals the speed of the last follower, multiplied by each follower. From this and from what has gone before we have, therefore, that *the number of threads per inch of the screw to be cut, multiplied by the number of teeth of each driver, equals the number of threads per inch of the lead screw, multiplied by the number of teeth of each follower.*

It is a simple matter, therefore, to find the ratio between the gear on the stud and the gear on the lead screw, and from that to determine what gears will be suitable.

1524. The process to be followed will be made clear by the following:

EXAMPLE.—Let the number of teeth in the different wheels in Fig. 398 be as follows: d_1, 30; f_1, 60; I, idle wheel. Assuming L to have six threads per inch, what change gears should be used to cut 4 threads per inch?

SOLUTION.—By formula **137**, letting N and n be the number of revolutions of the spindle and lead screw, respectively, we have $N \times d_1 \times d_2 = n \times f_1 \times f_2$, or $4 \times 30 \times d_2 = 6 \times 60 \times f_2$. Hence, $d_2 = \frac{6 \times 60 \times f_2}{4 \times 30} = 3 f_2$.

That is, the number of teeth of the gear on the stud ($= d_2$) must equal the number of teeth of the gear on the lead screw, multiplied by three. In other words, the gear on the stud must have three times as many teeth as the gear on the lead screw.

In like manner we have

$$\text{for 5 threads, } d_2 = \frac{12}{5} f_2;$$

$$\text{for 6 threads, } d_2 = 2 f_2;$$

$$\text{for 7 threads, } d_2 = \frac{12}{7} f_2;$$

etc., etc., etc.

For four threads we might use wheels of 84 and 28 teeth; for 5 threads 84 and 35, etc. In this way, a table might be calculated and arranged in columns, as below:

Threads per Inch.	Gear on Stud.	Gear on Lead Screw.
4	84	28
5	84	35
6	84	42
7	84	49
etc.	etc.	etc.

Such reference tables are always provided with lathes, and the gears are generally so chosen that the smallest number possible will have to be furnished with the lathe to cut the range of threads desired. Thus, in the above table, the gears were chosen so that one with 84 teeth would serve for cutting several different threads.

1525. Many lathes adapted for screw-cutting are not provided with the stud T, the gear d_2 being keyed directly to the end of the spindle S.

In such a case, if it is desired to find whether the lathe will cut a certain thread not marked on the plate which is usually attached to the head-stock, write the number of threads to be cut as the numerator of a fraction and the number of threads on the lead screw as the denominator; multiply both numerator and denominator by some number, and ascertain whether any of the gears in stock have the number of teeth corresponding to the results obtained; if not, multiply again by some other number, etc. Thus, suppose the lead screw has 8 threads per inch and it is desired to cut a thread which shall have $7\frac{1}{2}$ threads per inch. Forming the fraction gives $\frac{7\frac{1}{2}}{8}$. Multiplying both numerator and denominator by 6 gives $\frac{45}{48}$. Should any of the gears have 45 and 48 teeth, the 45-tooth gear should be put on the lead screw and the 48-tooth gear on the spindle.

1526. Again, when the lathe has a stud, the gears d_1 and f_1 are never changed, and the required change gears may be found by multiplying the fraction formed as directed above by a second fraction whose numerator shall be the number of teeth in d_1 and denominator the number of teeth in f_1, and then proceeding as before.

Thus, suppose it is desired to cut a thread having 19 threads per inch, the lead screw having 8 threads; the gear d_1, 24 teeth, and the stud pinion f_1, 48 teeth. Then, $\frac{19}{8} \times \frac{24}{48} = \frac{19}{16}$; and $\frac{19}{16} \times \frac{4}{4} = \frac{76}{64}$; hence, a gear having 76 teeth placed upon the lead screw, and one having 64 teeth placed on the stud, will cut a screw having 19 threads per inch.

REVERSING MECHANISMS.

1527. It is frequently required to design machinery, parts of which must have a reciprocating motion alternately in opposite directions. The various crank motions are sometimes employed for this purpose, but in many cases their

use is inadmissible, as they produce a variable motion, and for other reasons are inconvenient. It is also often necessary that machinery be constructed to run in either direction, at will. All such cases require the use of some reversing mechanism other than those previously described. A few additional examples will now be explained.

1528. Mangle Gearing.—Figs. 399 and 400 show the principle of mangle gearing, so named from its use in

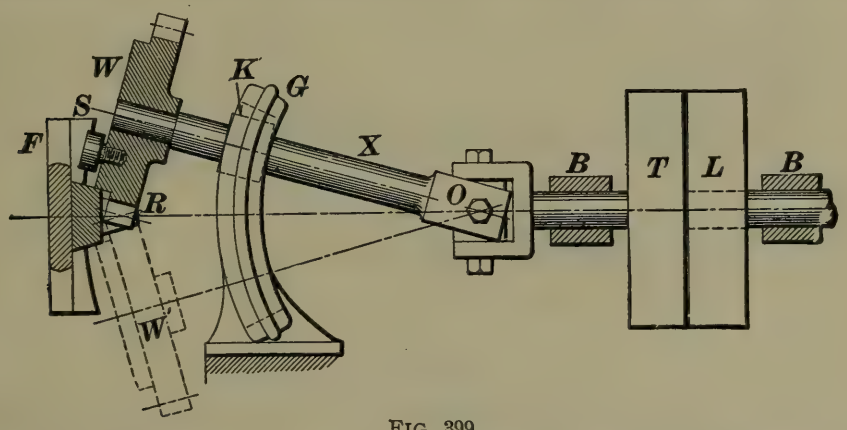

FIG. 399.

mangles for pressing clothes. Its principal use, at the present time, is for actuating the tables of printing presses. In Fig. 399 is a rack R, shown in cross-section, and so constructed that the gear-wheel W can run in mesh with it, either on top in position W, or underneath, as at W'. The rack is fastened to a frame F, also in section, attached directly to the table of the press. The object is to drive the table back and forth in a direction to and from the reader. The method will be understood by reference to Fig. 400, which is the rack and gear of Fig. 399, looked at from the left. As the frame F would obstruct the view of the other parts, it is omitted. A longitudinal section of the rack is shown.

Suppose the gear W to be on top of the rack, and to turn uniformly in the direction indicated. The rack will be driven to the right with a velocity equal to that of the pitch circle of the gear, until the roll A comes under the gear. One tooth of the gear is here omitted, leaving a large space which is rounded to fit the roll. From this point the gear

will gradually drop down in the line *m n*. At position *2* it will have made a quarter-turn, and the rack will have moved a distance *r* (= radius of the gear) to the right. At position *3* the rack will be at its former place, and further rotation of the gear will drive it to the left at a uniform speed. The motion of the rack is harmonic during the

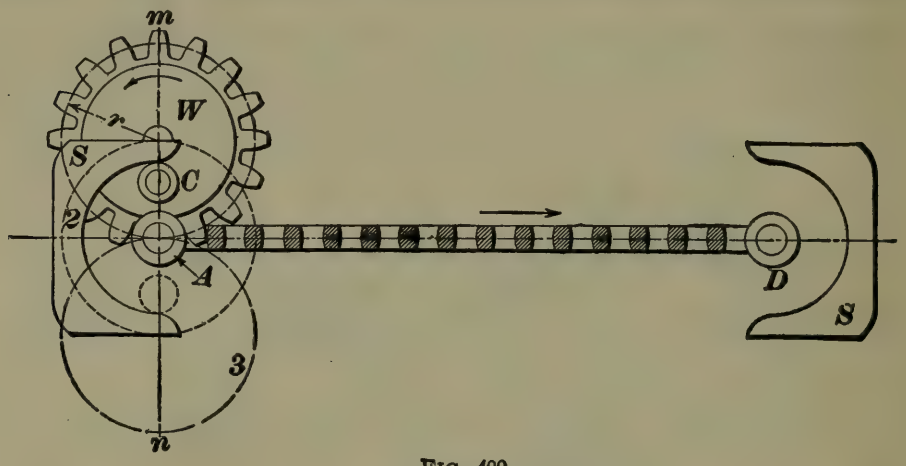

FIG. 400.

reversal. To place it under full control of the gear at the points of reversal, "shoes" *S*, *S* are fastened securely to the frame *F*. The inner curves of these are concentric with *A* and *D*, respectively, and serve as surfaces for the roll *C* on the gear to roll upon.

It is evident that the length *A D* of the rack must be equal to the circumference of the gear, or some multiple of the circumference, so that the wide space will come in contact with the rolls at each end. If, however, two spaces are cut diametrically opposite to each other, length *A D* may be some multiple of the half circumference. The total length of the stroke of the table is *A D*, plus the diameter of gear.

1529. Referring again to Fig. 399, the driving mechanism consists of tight and loose pulleys *T* and *L* on the shaft running in bearings *B*, *B*. *O* is a universal joint which allows the gear to rise and fall. *K* is a square block loose on the gear shaft *X*. It slides in a slotted guide *G*. and constrains the gear to move in a vertical straight line at the points of reversal

The advantages of this gearing are that, neglecting the irregular motion of the universal joints, a uniform reciprocating motion of any length of stroke may be given the table with a gradual reversal. The disadvantage is that, where once constrained, the stroke cannot be adjusted.

1530. Clutch Gearing. — A reversing mechanism often used, especially when the reversal must take place automatically, is shown in Fig. 401. It consists of three

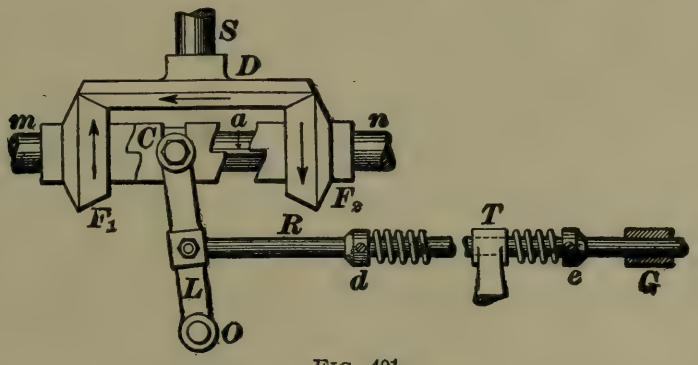

FIG. 401.

bevel gears, of which D is the driver, fast on the driving shaft S. F_1 and F_2 are continually in contact with D, and are loose upon shaft $m\ n$. A sleeve C can move endwise upon $m\ n$, but is compelled to turn with it by a key a provided in the shaft. When in the position shown, the notches clutch with F_1, and $m\ n$ turns; when in mid-position, $m\ n$ will not turn, and when thrown to the right, the direction of rotation will be reversed.

1531. If the reversal is to be automatic, some provision must be made to insure that after C has been pushed out of contact on one side, it will be thrown in contact with the other gear. One way of doing this is shown in the figure. The lever L is pivoted at O, and at the other end is forked to embrace C, a roller on each prong running in the groove shown. On the rod R, which is pivoted to L at one end and slides in a guide G at the other end, are two collars d and e, held in place by set screws. Helical springs are also placed on R against the inside of the collars. Now, suppose the tappet T, which is free to slide on R, be given a motion to

the right through mechanism connected with F_1, but not shown in the cut. When it reaches the spring, it will compress it until the pressure of the spring on e is sufficient to overcome the resistance of the clutch. Further movement of T will move C to the right until free of F_1, when the energy stored in the spring will suddenly throw C in contact with F_2. The time at which reversal occurs can be adjusted by changing the position of d and e.

1532. Sometimes it is desirable to have a slow motion in one direction with a "quick return." Figs. 402 and 403 show two methods that may be used for this purpose. In the first, the driver D is made cup shaped so as to allow a smaller driver d to be placed inside. For the slow motion we have d driving F_2, and, for the quick return, D driving F_1. In Fig. 403, S is the driving shaft, giving a slow and powerful motion through the worm gearing, shown clearly in the end view. The quick-return motion is through the gears D_1, F_1, D_2, and F_2.

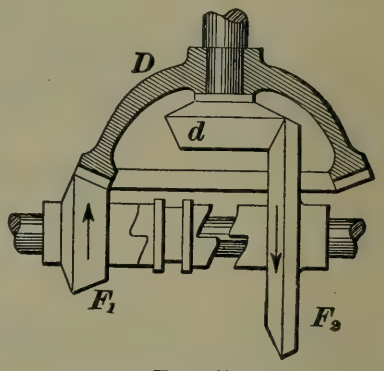

FIG. 402.

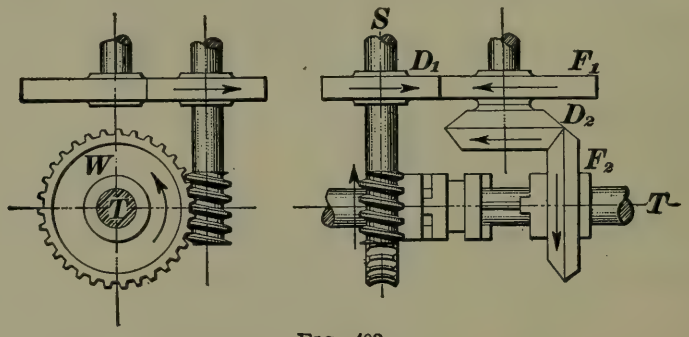

FIG. 403.

1533. It is evident that these mechanisms are not suitable for quick-running or heavy machinery. For such use, two belts are generally employed in place of the gears, one open and one crossed. Often these belts are made to shift alternately from a tight to a loose pulley, while in other cases they are arranged to drive two pulleys on the same

shaft in opposite directions, either of the pulleys being thrown in or out by means of a friction clutch, as, for example, in lathe countershafts.

1534. Shifting-Belt Mechanism.—Of the former class, Fig. 404 affords an illustration, as applied to a planer operating on metal. *H* is a section of the table, which is driven

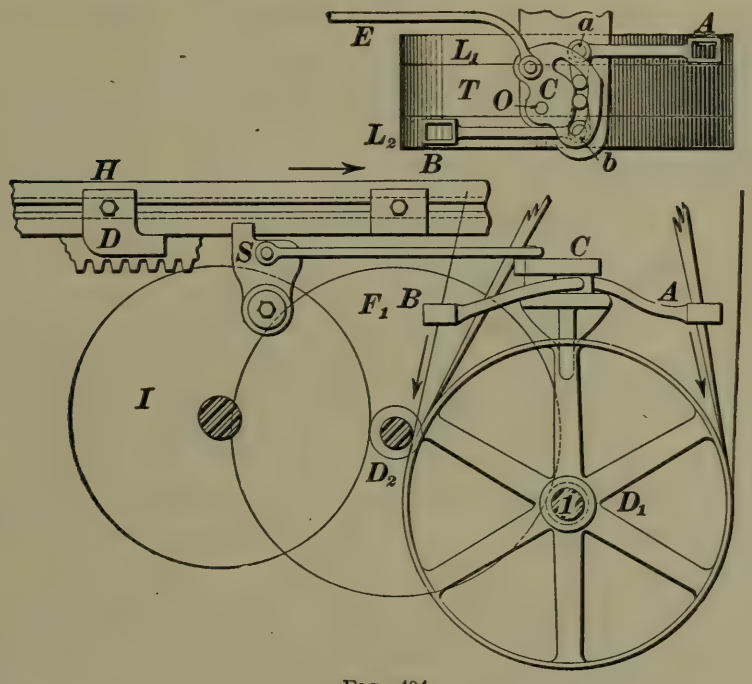

FIG. 404.

forwards and backwards by the rack and gearing shown. The work to be planed is clamped to the table, and during the forward, or cutting, stroke a stationary tool removes the metal. As no cutting takes place on the return stroke, the table is made to run back from two to five times as fast as forward, the latter speed being about 18 feet per minute for work on cast iron. There are three pulleys on shaft *1*. *T* is the tight or driving pulley, and L_1 and L_2 are both loose (see top view). There are two belt shifters *A* and *B*, in the shape of bell-cranks, pivoted at *a* and *b*, respectively. A crossed belt, moving in the direction of the arrow, runs from a small pulley on the countershaft, and is guided by the shifter *A*. This belt drives the table during the cutting

stroke. The other belt is "open," runs over a large pulley on the countershaft, and is guided by the shifter B.

The short arms of the shifters carry small rollers working in a slot in a cam plate C, which is pivoted at O. Each end of this slot is concentric about O, but one end has a greater radius than the other. As shown, the two shifters are in mid-position, both belts being on the loose pulleys. Suppose, however, the rod E be pulled to the left. Shifter B will not move, because its roller will continue to be in the same end of the slot, which is concentric about O; but the roller on A will be pulled to the left by passing from the end of the slot, which is of larger radius, to the end of the smaller radius. The crossed belt will, therefore, be shifted to the tight pulley, which will cause the table to run forward until the dog D strikes the rocker S, throwing the cam in the other direction. The effect of this will be to first shift the crossed belt from the tight to the loose pulley, and then to shift the open belt to the tight pulley; one motion follows the other, and thus decreases the wear and tear of the belts. The length of the stroke of the table can be varied by changing the position of the dogs, which are bolted to a T slot on the edge of the table.

The table is driven as follows: The belt pulleys drive gear D_1, which is keyed to the same shaft; D_1 drives F_1, which in turn drives D_2, keyed to the same shaft. D_2 drives gear I, which drives the table by means of a rack underneath it. The circumferential speeds of I and D_2 are evidently the same, and the speed of the table is the same as the circumferential speed of the gear D_2. The velocity ratio of the gearing is generally expressed in terms of the number of feet traveled by the belt to one foot passed over by the table.

1535. Suppose the belt pulleys to be 24 inches in diameter, and to make N revolutions while the table travels one foot. Let the diameter of D_1 be 3 inches; of F_1, 26 inches, and of D_2, 4 inches. The circumference of D_2 is $12\frac{1}{2}$ inches, nearly, so that for every foot traveled by the table, D_1

(and F_1) will turn $\frac{12}{12\frac{1}{2}} = \frac{24}{25}$ times. To find the number of turns made by the belt pulleys for each foot passed over by the table, we have, therefore,

$$N \times 3 = \frac{24}{25} \times 26, \text{ or}$$

$$N = \frac{24 \times 26}{75} = 8.32.$$

This multiplied by the circumference of the pulley $= 8.32 \times 2 \times 3.1416 = 52\frac{1}{4}+$ feet. That is, the planer is geared to run $52\frac{1}{4}$ to 1.

EXAMPLES FOR PRACTICE.

1. In a wheel train, a pulley A drives a pulley B by open belt; B is on the same shaft with a gear C, which drives a gear D; a gear E is on the same shaft with D and meshes with a gear F. Suppose A to be 30″ in diameter and B 26″, and let C have 90 teeth; D, 80 teeth; E, 70 teeth, and F, 60 teeth. How many revolutions will F make in five minutes, if A runs at 45 revolutions per minute?

Ans. 340.74 revolutions.

2. An engine lathe belt is on the third speed, the diameters of the steps upon which the belt is running being 9″ on the countershaft and 4″ on the lathe spindle. If the back gears are "in," how many turns will the countershaft make for one of the lathe spindle, supposing gears F_1 and F_2 (Fig. 398) to have 64 teeth each, and D_1 and D_2, 24 teeth each? Ans. 3.16 revolutions.

3. In Fig. 398, suppose the stud T to make 3 turns while the lathe spindle makes 4. What change gears could be used to cut 10 threads per inch, the lead screw having 6 threads per inch?

Ans. The gears should be in the ratio of 4 : 5, the latter being the lead screw gear.

4. In Fig. 404, let the diameter of the pulleys be 30″; of D_1, 4″; of D_2, 4″, and of F_1, 22″. What is the ratio of belt to cutting speed?

Ans. 41.4 + : 1.

DIFFERENTIAL GEARING.

1536. Heretofore, in the discussion of wheel trains, it has been assumed that the bearings of the various wheels remained fixed. Occasionally, however, cases are met with in practice where the wheels not only turn about their own axes, but in which one or more of them revolves bodily about

some other axis, thus having a compound motion of rotation and translation. Such combinations are known as **differential gearing** or **epicyclic trains.** Their action is somewhat confusing at first, but can be made to appear simple by applying the principle of successive movements.

1537. The Two-Wheel Train.—I.—In Fig. 405 are shown two gears D and F united by an arm A. Suppose the number of teeth in D to be represented by m, and the number in F, by n; then, when the arm A is fixed, and D is revolved once about its axis right-handed, F will be revolved left-handed about its axis $\frac{m}{n}$ times. Denoting right-hand rotation by $+$ and left-hand rotation by $-$, gear D turns $+1$ times and gear F, $-\frac{m}{n}$ times. This is the ordinary case of transmission of motion by two gears.

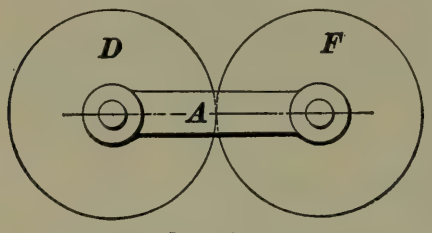

FIG. 405.

1538. II.—Suppose, however, that gear D is fixed in position so that it cannot turn, and the arm A is given a $+$ rotation about the axis of D, the gear F then partakes of two rotations, $+1$ about the axis of D and $+\frac{m}{n}$ about its own axis. In order to see this more clearly, imagine the two gears to be replaced by two friction wheels whose diameters are in ratio $\frac{m}{n}$; then, it is perfectly clear that, in order to rotate the arm, the wheel F must roll on D in the *same* direction, and that the number of times it turns on its axis is $\frac{m}{n}$. The only difference in the motions, in so far as the rotation of F on its own axis is concerned in these two cases, is that it has a negative rotation in the first case and a positive one in the second case. If the two gears are equal, one revolution of the arm will cause F to turn once on its own axis. This may also be considered in the following manner:

(*a*) Let the wheels be locked, or wedged together, so that neither can turn relatively to the other, and let the whole combination, D, F, and A, be turned as one body about the axis of D once R. H. (right-handed). The arm A has now been turned around once R. H., just as was desired; but, in doing so, D has been turned once R. H., when, according to the conditions, it should have remained stationary.

(*b*) Hence, the next step is to unlock the wheels, hold the arm stationary and turn D back one turn L. H. (left-handed) to where it should be. This will cause F to turn $\frac{m}{n}$ times R. H. After that is done, each part of the combination will have been through just the same relative motion that it would have had if the conditions had been carried out directly.

The results of the two steps upon D, F, and A can be tabulated thus, + indicating R. H. rotation and − indicating L. H. rotation:

	D	F	A
(*a*) Wheels locked	$+1$	$+1$	$+1$
(*b*) Arm stationary	-1	$+\frac{m}{n}$	0
(*c*)	0	$1+\frac{m}{n}$	$+1$

The algebraic sum of these in the third horizontal row gives the total motion of each part. It will be seen from this that if D and F have the same number of teeth, F will make two revolutions to one of the arms, one being about its own axis, and the other about the axis of D.

EXAMPLE.—Referring to Fig. 405, suppose D has 50 teeth, F, 20 teeth, and A to be turned 10 times L. H. How many turns will F make, and in what direction?

SOLUTION.—

	D	F	A
Wheels locked	-10	-10	-10
Arm stationary	$+10$	$-10\times\frac{50}{20}$	0
	0	$-(10+25)$	-10

F makes 35 turns L. H.

1539. III.—Suppose that the shaft on which F turns were the crank-shaft of a steam engine, and that the gear D were keyed to the end of the connecting-rod, the arm A being loose on both shafts. Then, one stroke of the piston would carry D to a position diametrically opposite, and the return stroke would bring it back to its first position; in other words, D would pass entirely around F, but without turning on its own axis, because of being keyed to the connecting-rod. The result will be that F will turn twice for one revolution of the arm when the gears D and F are of the same size. Although difficult to explain in a simple manner, a little thought will convince the student of the truth of this statement, and if he can obtain a couple of gears and try the experiment the result will amply reward him for the trouble. The result may be arrived at very simply, however, by means of the method of analysis used above. Suppose the gears to be locked and the whole combination, including the connecting-rod, to be revolved once right-handed. Denoting the connecting-rod by C, and remembering that the connecting-rod as a whole does not revolve, we must now return it to its original position by giving it a left-hand rotation (the arm A being fixed). This causes D to turn once left-handed and F, $\frac{m}{n}$ times right-handed, assuming that D has m teeth and F has n teeth. Tabulating the results, we have

	C	D	F	A
Wheels locked	$+1$	$+1$	$+1$	$+1$
Arm stationary	-1	-1	$+\frac{m}{n}$	0
	0	0	$1+\frac{m}{n}$	$+1$

The algebraic sum shows that for one revolution of A, F turns $1+\frac{m}{n}$ times and that C and D do not turn at all, which is perfectly true, since, when D is keyed to C, it is no longer a separate link, but is a part of C. Consequently, if D and

F are of the same size, $m = n$ and F turns twice right-handed for one right-handed revolution of the arm A.

This motion was used by Watt to drive his engine, some one else having patented the crank motion. It is known as the **sun and planet motion**; the fixed gear being the sun and the revolving gear the planet.

1540. Higher-Wheel Trains.— In Fig. 406 is represented a three-wheel train, derived from the two-wheel train by inserting the idle wheel I. Here, as in previous cases, the number of turns made by the wheel F is entirely independent of the size or number of teeth in the idler.

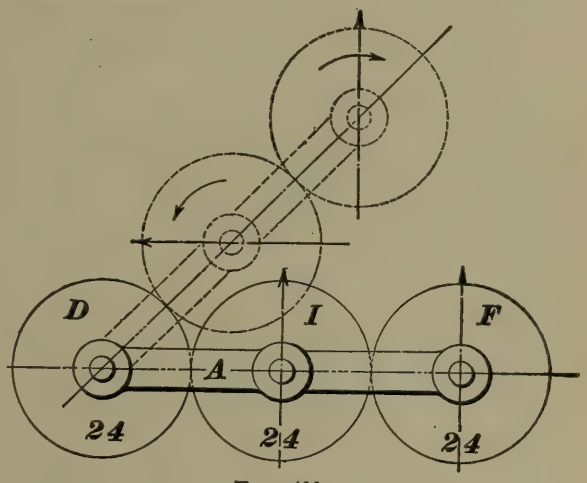

FIG. 406.

EXAMPLE.—Suppose all three wheels to have 24 teeth. If the arm makes -5 turns about the axis of D, how many turns will F make, and in which direction?

SOLUTION.—	D	I	F	A
Wheels locked	-5	-5	-5	-5
Arm stationary	$+5$	-5	$+5$	0
	0	-10	0	-5

The method of procedure is exactly the same as with the two-wheel train, and it will be noticed that the action of I in this train is the same as that of F in the two-wheel train. F, in the three-wheel train, however, does not turn at all. The straight arrows in the figure are supposed to be fastened to the wheels, so that the action of the train can be seen by noticing the directions in which the arrows point in the dotted positions.

1541. The statement that F does not turn at all is not literally true, since it turns once on its own axis and once on the axis of D. What the statement really implies is this:

The gear F cannot impart motion to an annular gear (supposing it to mesh with one) keyed to the shaft of D; that is, if an annular gear, keyed to the axis of D, meshes with gear F, and is caused to revolve owing to the rotation of the arm A, it will receive no motion from the gear F owing to the rotation of F on its own axis. It will, in fact, be deprived of a part of the rotation it should receive from the arm of A owing to this positive rotation of F, the amount of which is represented by $\frac{m}{p}$, m being the number of teeth in each of the three gears and p the number of teeth in the annular gear. Suppose, however, that the three gears D, I, and F were to be replaced by the two gears D and F, of Fig. 405, both gears being free to turn on their axes. Then, representing the number of teeth in the annular gear by p, one + revolution of the arm will cause the annular gear (which we will call L) to rotate $1 + \frac{\frac{m}{n} \times n}{p} = 1 + \frac{m}{p}$ times. For the annular gear and gear F, both turn right-handed (D being fixed) and F turns $\frac{m}{n}$ times; the number of teeth in L which come in contact with corresponding teeth in F is $\frac{m}{n} \times n = m$; hence, L will make a part of a revolution represented by $\frac{m}{p}$ due to the turning of F on its axis, and one revolution due to the rotation of the arm A, the whole movement being represented by $1 + \frac{m}{p}$. Using our method of analysis and applying to the first case, we have, assuming all three gears attached to A to be of the same size, and remembering that an annular gear always turns in the same direction as its pinion,

	D	I	F	L	A
Wheels locked	$+1$	$+1$	$+1$	$+1$	$+1$
Arm stationary	-1	$+1$	-1	$-\frac{m}{p}$	0
	0	$+2$	0	$1-\frac{m}{p}$	$+1$

For the second case, with two gears,

	D	F	L	A
Wheels locked	$+1$	$+1$	$+1$	1
Arm stationary	-1	$+\frac{m}{n}$	$+\frac{\frac{m}{n}\times n}{p}$	0
	0	$+1+\frac{m}{n}$	$+1+\frac{m}{p}$	$+1$

It should not be imagined that the gear F imparts a backward motion to L in the first case above, for it does not; its rotation simply prevents the arm from imparting to L its entire motion, which it would do if F were keyed to the arm.

1542. A **four-wheel train,** one of the wheels being an annular wheel, is shown in Fig. 407. D is fixed, the other wheels all turning. A revolves about the axis of F_1. D_1 and F are on the same spindle, F rolling inside of D.

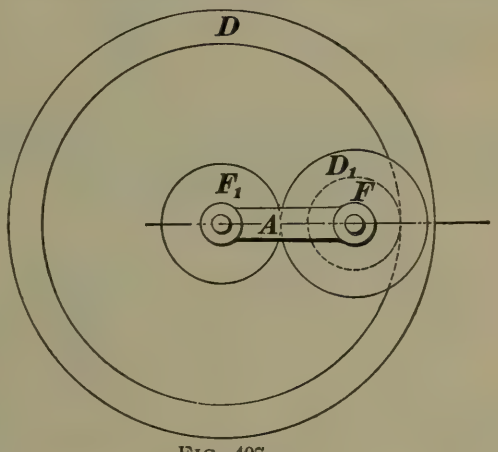

FIG. 407.

In working out a train of this kind, first consider all the wheels, including D, to be locked together and to turn with the arm, as in previous cases. Then, make the arm stationary, and turn D back to the position it should occupy.

EXAMPLE.—Let D have 100 teeth; F, 20; D_1, 45, and F_1, 35. A makes $+10$ turns. Required the number of turns made by the pinions.

SOLUTION.—	D	F and D_1	F_1	A
Wheels locked	$+10$	$+10$	$+10$	$+10$
Arm stationary	-10	-50	$+\left(\frac{45}{35}\times 50\right)$	0
	0	-40	$+74\frac{2}{7}$	$+10$

1543. Differential Bevel Train.—A **differential bevel train** is shown in Fig. 408. It consists of three miter wheels, two of which, E and C, are on the shaft S, the

third revolving on the arm A, which is also on S. It is assumed that none of the wheels can slide endways upon their shafts. This train has certain peculiar as well as very useful properties.

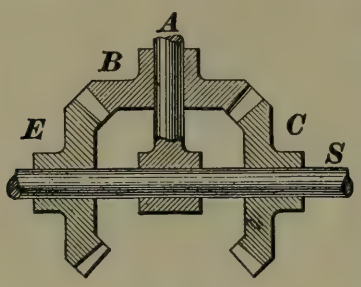

FIG. 408.

Suppose A to be held rigidly in one position, and E and C to be loose on the shaft. Then, if C be turned once one way, E will turn *once* in the *opposite* direction, the three wheels forming a simple train of gears, B being an idle wheel.

Now, suppose C to be held in one position and A to be turned once about the shaft S. E will then revolve *twice* in the *same* direction as the arm. That it will do so can be clearly seen by applying the principle of relative motions, as follows:

	A	C	E
Wheels locked	$+1$	$+1$	$+1$
Arm stationary	0	-1	$+1$
	$+1$	0	$+2$

From the above it will be seen that if we consider C the driver and E as fixed, A will revolve one-half as fast as C.

If we assume that the arm and all the wheels are free to turn, and if C is rotated one way at a uniform speed and E the opposite way at the same speed, B will revolve upon A, but A will remain still. If, however, C is rotated faster than E, the arm will move in the direction of C through one-half the angle gained; if C turns slower than E, the arm will move correspondingly the opposite way.

It will thus be seen that a bevel train is capable of a variety of combinations that can be applied in a useful way. A few practical applications of this and the other differential trains will now be given.

EXAMPLES FOR PRACTICE.

1. In Fig. 406, let D have 25 teeth; I, 30 teeth, and F, 50 teeth. If D is stationary and the arm makes 5 turns L. H., how many turns will F make, and in what direction? Ans. $2\frac{1}{2}$ turns L. H.

2. In Fig. 407, suppose D to be 40″ in diameter; F, 10″; D_1, 14″, and F_1, 16″. If D remains stationary, how many turns will F_1 make to each turn of the arm? Ans. $4\frac{1}{2}$ turns.

3. In Fig. 408, suppose E to make 1 turn R. H. (looked at from the right) and A, two turns L. H. How many turns will C make, and in which direction? Ans. 5 turns L. H.

1544. Differential "Back-Gears."—Upright drills for metal work are sometimes provided with arrangements for increasing the range of the speeds and driving power that are different from the back-gears explained under the engine-lathe train. Fig. 409 shows one arrangement for this purpose. S is the shaft, and C the cone pulley which is loose on the shaft. D is a casting, also loose on the shaft, having

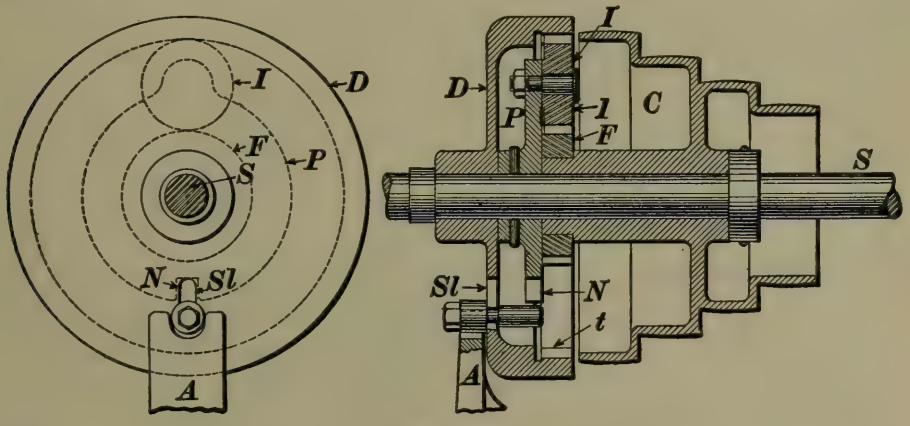

FIG. 409.

teeth on the inside, thus forming an annular gear. A plate P, carrying the small gear or pinion I, is fast to the shaft. On the left-hand end of the pulley hub is another gear F, which is fast to the hub of the cone.

The action is as follows: A pin, on which there is a collar and nut, is clamped in the slot $S\,l$ in D. The pin projects through D so that when it is placed in the inner end of the slot it will engage with a corresponding slot in the plate P. When it is lowered, however, the pin disengages with the plate, but the collar can be made to fall in a slot in the arm A, which is a part of the frame. In the former position D, P, and F are locked together, so that the shaft must turn with the cone. In the latter position D is locked with the

frame and cannot turn, while F revolves with the cone. The plate P, therefore, revolves with the shaft at a reduced speed, the arrangement being similar to that in Fig. 407.

1545. Differential Motion.—Perhaps the most important application of the differential bevel train is to be found in spinning machinery, where it is necessary to wind the partly twisted fiber, or *roving*, upon bobbins. As each successive layer is wound on the bobbin, the latter becomes correspondingly larger and must revolve at a reduced speed; otherwise, the roving, which is delivered at a constant speed, would be broken.

1546. In Fig. 410, B is the bobbin at the top of which the flyer f is suspended. The roving passes through a hole c in the center of the upper part of the flyer, then down

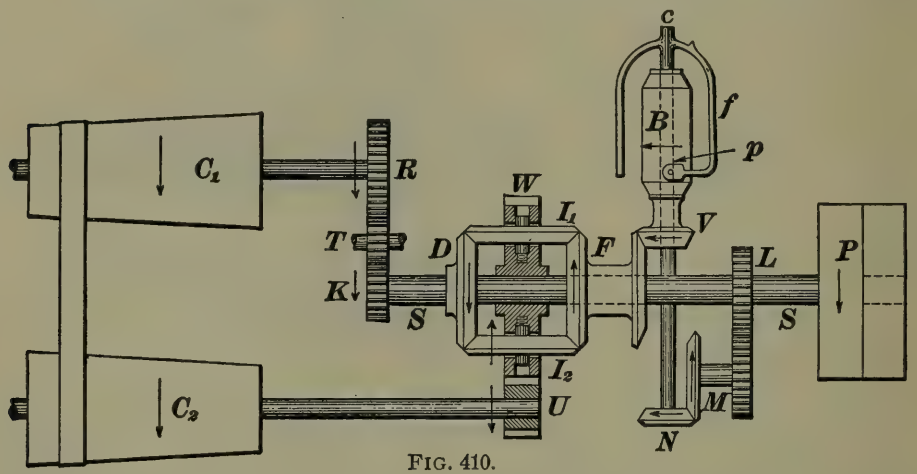

FIG. 410.

through the hollow arm f of the flyer and through a hole in the presser p to the bobbin. This gives a uniform twist to the roving. The flyer moves up and down the length of the bobbin winding on the roving in helical layers.

The machine is driven by a belt through the pulley P and the shaft $S\,S$. The first gear L on the shaft drives the flyer at a constant velocity through M and N. The next gear that is fast to the shaft is the miter wheel D. This forms part of a differential bevel train, the other wheel on the shaft being F, which is loose. To improve the running qualities, there are two intermediate wheels, I_1, I_2, instead of one, as in Fig.

408. A gear W, shown in section and loose upon the shaft, serves the purpose of the arm used in Fig. 408. Its action is exactly the same as the arm, the wheel being used simply as a means for causing it to revolve about the shaft. The object of the epicyclic train is to drive the bobbin, by means of F and V, at a *varying* velocity suited to the varying diameter of the bobbin.

This is brought about by the cone pulleys C_1 and C_2. The former is driven by the main shaft through the gears K, T, and R, and the latter drives W through gear U. Now we have D rotated uniformly in one direction, which turns F the opposite way. W has a motion opposite to that of D, the number of revolutions that it makes depending upon the position of the belt on the cones. As the belt is moved automatically to the left, W turns slower, F turns slower, and hence the bobbin turns slower as the roving is wound on. The gearing is such that the bobbin revolves in the same direction as the flyer and just enough faster to take the roving as it is delivered.

1547. Hartford Water-Wheel Governor.—Another application of the bevel train is to be found in the water-wheel governor, in Fig. 411. W_1 and W_2 are two wide-faced pulleys driven by the belt which passes over the guide pulleys P_1 and P_2. W_1 is a frustum of a cone, with its diameter at the middle, the same as that of W_2, which is an ordinary pulley. These pulleys give motion to the double bevel wheels E and C, both of which are loose upon the shaft,

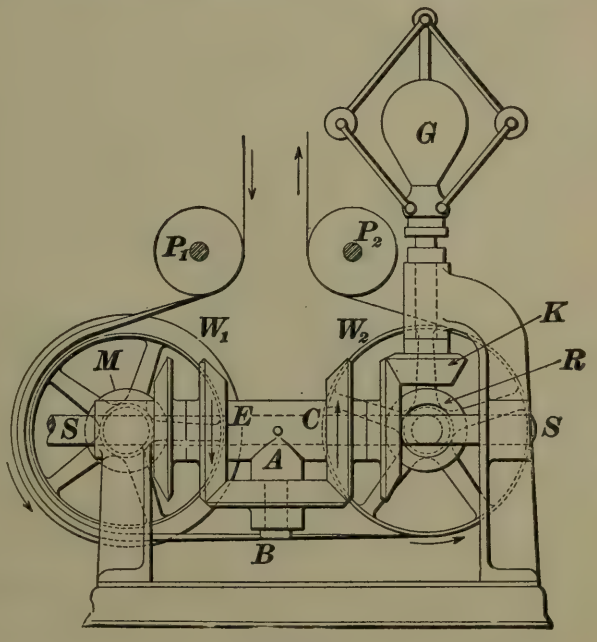

FIG. 411.

through the bevel gears M and R, respectively. The inner parts of E and C gear with the miter gear B on the arm A, the latter being keyed to the shaft. The outer part of C drives the governor G through the gear K. The work of the governor is to shift the belt on the cone by means of a fork (not shown) near pulley P_1.

The action is as follows: When the water-wheel is running at the proper speed, the belt is at the middle of the cone and E and C turn equally in opposite directions. Hence, A does not move. Should the wheel run too fast, however, the governor balls would rise, since the speed of W_2 must always be proportional to that of the water-wheel. This at once causes the belt to be shifted to the small end of the cone, increasing the speed of E. This, in turn, makes A, and hence the shaft, rotate in the direction of E, and an arrangement at the left-hand end of the shaft S S (not shown) lowers the water-wheel gate. If the wheel should slow down, the reverse operation would take place.

GEAR WHEELS.

1548. Let two wheels with parallel axes be held in firm

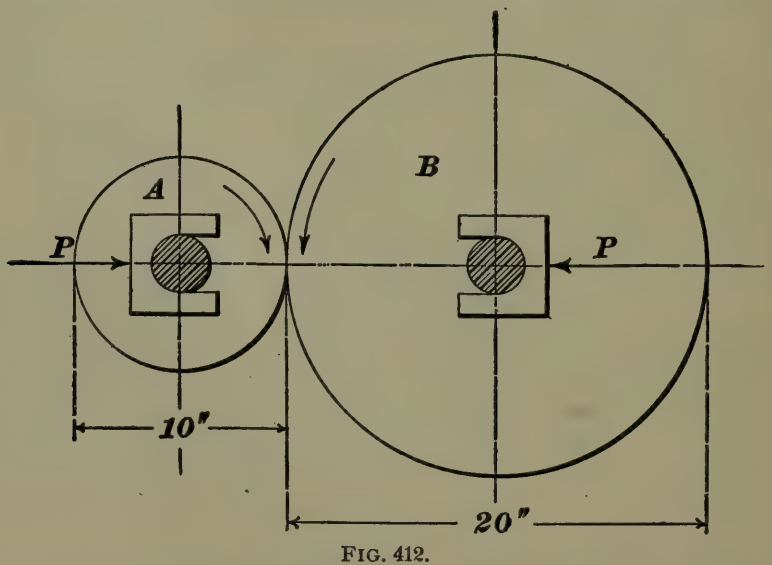

FIG. 412.

rolling contact by pressure upon their axes, as in Fig. 412.

If one be turned in either direction, and there is no slipping, the other will rotate in the opposite direction with a circumferential, or surface, velocity equal to that of the first, as though connected by a crossed belt, and the numbers of their revolutions will be inversely proportional to their diameters. Assuming wheel A to be $10''$ in diameter and B $20''$, B would make $\frac{10}{20} = \frac{1}{2}$ as many revolutions as A.

1549. Should slipping occur, however, B would make less than one-half as many revolutions as A, if A were the driver. To obviate slipping, suppose that pieces like a, a, Fig. 413, are fastened at equal distances on the peripheries of A and B, and that corresponding grooves like b, b are cut. Then, the projections, or teeth, on one wheel will run be-

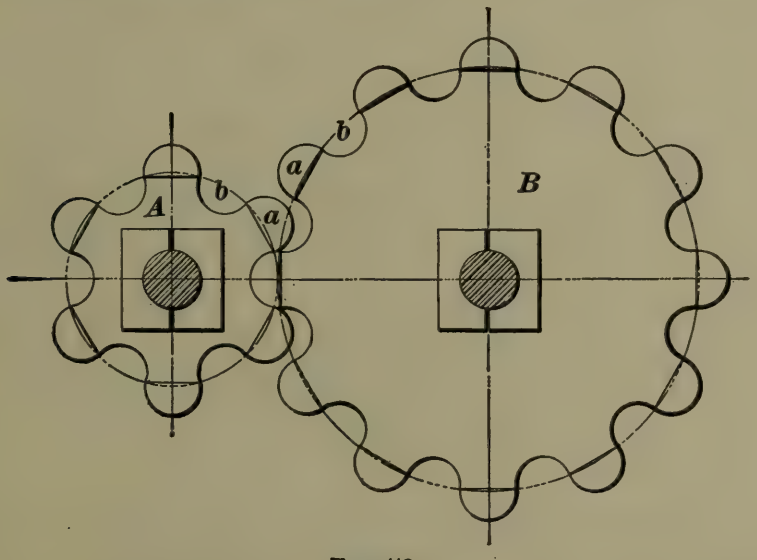

FIG. 413.

tween the teeth on the other, and B will necessarily revolve one-half as often as A. It is important to notice, however, that although the *number of revolutions* of the wheels in the latter case will be in the ratio of 2 to 1, the speed from *tooth to tooth* might vary somewhat from this ratio, unless the teeth were of a shape that would give a constant velocity ratio. This would result in an uneven motion that would be undesirable, even though the variation was very slight.

1550. The object, then, in designing the teeth of gear-wheels should be to so shape them that the motion transmitted will be exactly the same as with a corresponding pair of wheels, or cylinders, without teeth, and running in contact without slipping.

FIG. 414.

Such cylinders are called **pitch cylinders,** and are always represented on the drawing of a gear-wheel by a line called the **pitch circle.** (See Fig. 414.) The pitch circle is also called the **pitch line.**

1551. The diameter of the pitch circle is called the **pitch diameter.** When the word "diameter" is applied to gears, it is always understood to mean the **pitch diameter,** unless otherwise specially stated, as "outside diameter" or "diameter at the root."

1552. Circular and Diametral Pitch.—The distance from a point on one tooth to a corresponding point on the next tooth, *measured along the pitch circle*, is the **circular pitch.** It is obtained by dividing the circumference (pitch circle) by the number of teeth, and is used in laying out the teeth of large gears, and also when calculating their strength.

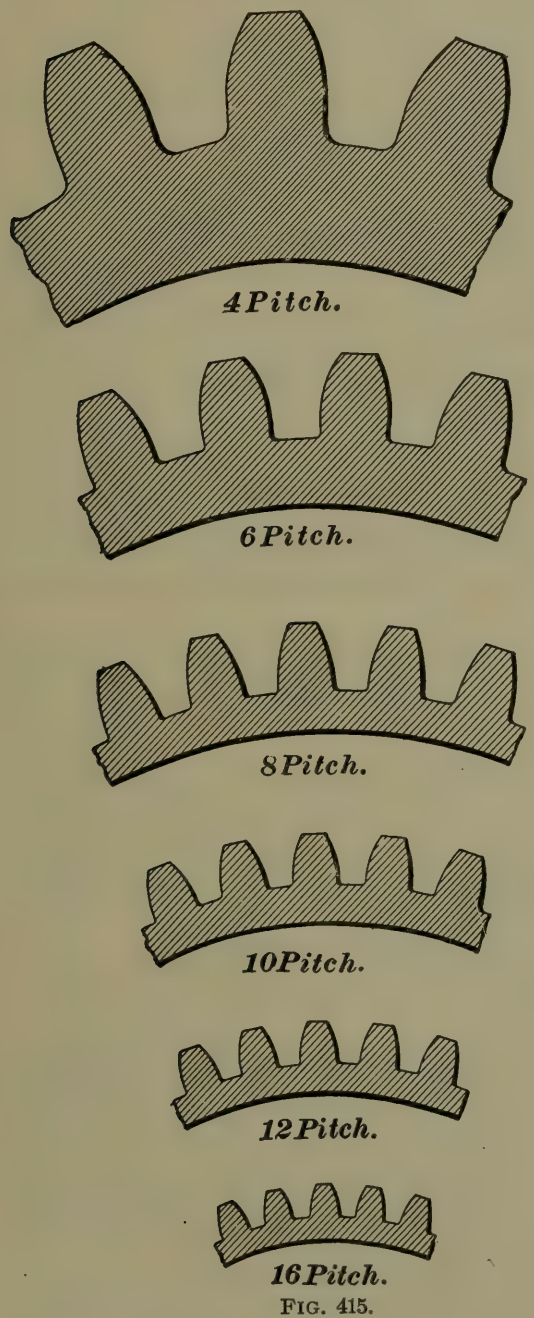

FIG. 415.

It would be very convenient to have the circular pitch expressed in manageable numbers like 1 inch, $\frac{3}{4}$ inch, etc.; but as the circumference of a gear is 3.1416 times its diameter, this requires awkward numbers for the diameters. Thus, a wheel of 40 teeth, 1 inch pitch, would have a circumference on pitch circle of 40 inches and a diameter of 12.732 inches. Of the two, it is more convenient in the great majority of cases to have the diameters expressed in numbers that can be easily handled. In order, however, to have the pitch in a convenient form also, a new pitch has been devised, *expressed in terms of the diameter* and called the **diametral pitch.**

1553. The diametral pitch is not a measurement like the circular pitch, but a *ratio. It is the ratio of the number of teeth in the gear to the number of inches in the diameter; or, it is the number of teeth on the circumference of the gear for one inch diameter of the pitch circle.* It is obtained by dividing the number of teeth by the diameter.

A gear, for example, has 60 teeth and is 10 inches in diameter. The diametral pitch is the ratio of 60 to 10 $= \frac{60}{10}$ $= 6$, and the gear would be called a 6-pitch gear. From the definition, it follows that teeth of any particular diametral pitch are of the same size, and have the same width on the pitch line, whatever the diameter of the gear. Thus, if a 12-inch gear had 48 teeth, it would be 4 pitch. A 24-inch gear to have teeth of the same size would have twice 48 or 96 teeth, and $96 \div 24 = 4$, the same diametral pitch as before.

Fig. 415 shows the sizes of teeth of various diametral pitches.

Diametral pitch has also been defined as the number of teeth in a gear of one inch diameter, which amounts to the same as the definitions above.

Using for illustration a wheel 10 inches in diameter with 60 teeth, we have

$$\text{circular pitch} = \frac{\text{circumference}}{\text{No. of teeth}} = \frac{10 \times 3.1416}{60} = .524 \text{ inch.}$$

$$\text{Diametral pitch} = \frac{\text{No. of teeth}}{\text{diameter}} = \frac{60}{10} = 6.$$

1554. Other Definitions.—The other necessary definitions applying to the parts of a gear can be readily understood from Fig. 414. The thickness of the tooth and width of the space are measured on the pitch circle. A tooth is composed of two parts, the **addendum,** or outside of the pitch circle, and the **root,** which is inside.

A line through the outside end of the addendum is called the **addendum circle,** or **addendum line,** and one through the inside part of the root is called the **root circle,** or **root line.** The amount by which the width of the space is

greater than the thickness of the tooth is called the **back lash,** or **clearance.**

1555. Proportions for Gear Teeth.—With gears of large size, and often with cast gears of all sizes, the circular pitch system is used. In these cases, it is usual to have the addendum, whole depth, and thickness of the tooth conform to arbitrary rules based upon the circular pitch. None of these rules can be considered absolute, however. Machine-moulded gears require less clearance and back lash than hand-moulded, and very large gears should have less, proportionately, than smaller ones. The following table of proportions that have been used successfully will serve as an aid in deciding upon suitable dimensions. Column 1 is for ordinary cast gears, and column 2 is for very large gears having cut teeth. C stands for circular pitch.

TABLE 34.

	1	2
Addendum	$0.30C$	$0.30C$
Root	$0.40C$	$0.35C$
Whole Depth	$0.70C$	$0.65C$
Thickness of Tooth	$0.48C$	$0.495C$
Width of Space	$0.52C$	$0.505C$

The gears most often met with are the cut gears of small and medium size, like those, for example, on machine tools, which are almost invariably diametral pitch gears. The teeth are cut from the solid with standard milling cutters, proportioned with the diametral pitch as a basis. The system is also coming into very general use for cast gearing. In all diametral pitch gears, the addendum is made equal to 1 divided by the diametral pitch, and the working depth twice the addendum. The end clearance is usually taken equal to $\frac{1}{8}$ of the addendum for cut gears, though the Brown & Sharpe Mfg. Co. use $\frac{1}{10}$ of the thickness of the tooth on the pitch line as the clearance. The side clearance, or back

lash, is made just enough to give a good working fit, and seldom exceeds $\frac{1}{50}$ of the pitch.

Using the above proportions, a 4-pitch gear would have the addendum $= 1 \div 4$, or $\frac{1}{4}$ of an inch; the working depth would be $2 \times \frac{1}{4} = \frac{1}{2}$ inch, and the clearance $\frac{1}{8} \times \frac{1}{4} = \frac{1}{32}$ inch. The whole length of the tooth would be $\frac{1}{2} + \frac{1}{32} = \frac{17}{32}$ inch. The thickness of the tooth would be $\frac{1}{2}$ the circular pitch, nearly. In a 10-pitch wheel the addendum would be $\frac{1}{10}$ inch and the length of the tooth $\frac{17}{80}$ inch; in a $2\frac{1}{2}$ pitch it would be $1 \div 2\frac{1}{2} = \frac{2}{5}$ inch and the length $\frac{17}{20}$ inch.

1556. Sizing Gear Blanks.—It is quite as important to be able to solve problems involving the diameter, number of teeth, and circular and diametral pitch of gear-wheels, as to be able to lay out the correct tooth curves. Several rules and examples will be given covering cases likely to be met with.

For convenience, these symbols will be used:

$P =$ diametral pitch;
$D =$ diameter of pitch circle;
$O\,D =$ outside diameter;
$C =$ circular pitch;
$N =$ number of teeth;
$A =$ distance between centers of two wheels;
$V =$ velocity—i. e., revolutions per minute.

When two wheels run together, small letters, like the above, will be used for the smaller wheel, the large letters applying to the larger wheel.

The product of the circular pitch of a gear and the diametral pitch is always the constant number 3.1416. *Hence, to change circular to diametral pitch, divide 3.1416 by the circular pitch; to change diametral to circular pitch, divide 3.1416 by the diametral pitch.* That is,

$$P = \frac{3.1416}{C}, \text{ and} \qquad \textbf{(149.)}$$

$$C = \frac{3.1416}{P}. \qquad \textbf{(150.)}$$

EXAMPLE.—If the circular pitch is 2 inches, the diametral pitch, or $P, = \frac{3.1416}{2} = 1.571$ inches, nearly. If the diametral pitch is 4, the circular pitch, or $C, = \frac{3.1416}{4} = .7854$ inch.

1557. Table 35 gives in the first two columns values of circular pitch corresponding to common values of diametral pitch, and in the last two columns values of diametral pitch corresponding to circular pitch values.

TABLE 35.

Diametral Pitch.	Circular Pitch.	Circular Pitch.	Diametral Pitch.
2	1.571 inches.	2 inches.	1.571
$2\frac{1}{4}$	1.396 "	$1\frac{7}{8}$ "	1.676
$2\frac{1}{2}$	1.257 "	$1\frac{3}{4}$ "	1.795
$2\frac{3}{4}$	1.142 "	$1\frac{5}{8}$ "	1.933
3	1.047 "	$1\frac{1}{2}$ "	2.094
$3\frac{1}{2}$	.898 "	$1\frac{7}{16}$ "	2.185
4	.785 "	$1\frac{3}{8}$ "	2.285
5	.628 "	$1\frac{5}{16}$ "	2.394
6	.524 "	$1\frac{1}{4}$ "	2.513
7	.449 "	$1\frac{3}{16}$ "	2.646
8	.393 "	$1\frac{1}{8}$ "	2.793
9	.349 "	$1\frac{1}{16}$ "	2.957
10	.314 "	1 "	3.142
11	.286 "	$\frac{15}{16}$ "	3.351
12	.262 "	$\frac{7}{8}$ "	3.590
14	.224 "	$\frac{13}{16}$ "	3.867
16	.196 "	$\frac{3}{4}$ "	4.189
18	.175 "	$\frac{11}{16}$ "	4.570
20	.157 "	$\frac{5}{8}$ "	5.027

The product of the diameter and diametral pitch in any gear is equal to the number of teeth, or

$$N = D\,P. \qquad \textbf{(151.)}$$

Also, knowing the number of teeth and the diametral pitch, the diameter may be found from the same formula.

EXAMPLE.—(*a*) If a wheel is 30 inches in diameter and 3 pitch, how many teeth has it?

(*b*) Of what diameter is a $2\frac{1}{2}$ pitch gear having 20 teeth?

SOLUTION.—(*a*) $N = D\,P = 3 \times 30 = 90$ teeth. Ans.

(*b*) $D = \frac{N}{P} = \frac{20}{2\frac{1}{2}} = \frac{40}{5} = 8$ inches. Ans.

The outside diameter of a gear equals the pitch diameter, plus twice the addendum, or $O\,D = D + 2 \times \frac{1}{P}$. But $D = \frac{N}{P}$. Hence, to obtain the outside diameter, knowing the diametral pitch and number of teeth, we have

$$O\,D = \frac{N}{P} + 2 \times \frac{1}{P} = \frac{N+2}{P}. \qquad \textbf{(152.)}$$

EXAMPLE.—A wheel is to have 48 teeth, 6 pitch; to what diameter must the blank be turned?

SOLUTION.—By formula **152**, $O\,D = \frac{N+2}{P} = \frac{48+2}{6} = 8.333$ inches. Ans.

EXAMPLE.—A gear blank measures $10\frac{1}{2}$ inches in diameter and is to be cut 4 pitch. How many teeth should the gear cutter be set to space?

SOLUTION.—From formula **152**, $O\,D = \frac{N+2}{P}$, or $N = O\,D \times P - 2 = 10\frac{1}{2} \times 4 - 2 = 42 - 2 = 40$ teeth. Ans.

To find the diameter, the circular pitch and number of teeth being given, we have, from the definition of circular pitch,

$$D = \frac{C \times N}{3.1416}. \qquad \textbf{(153.)}$$

EXAMPLE.—What is the diameter of a gear-wheel which has 75 teeth and whose circular pitch is 1.675 inches?

SOLUTION.—$D = \frac{1.675 \times 75}{3.1416} = 40$ inches. Ans.

Having given the distance between the centers of two gears and their velocities, the formulas for their diameters may be derived as follows:

From formula **136,** $VD = vd$, or $D = \frac{vd}{V}$, but $A = \frac{D+d}{2}$, or $D = 2A - d$. Equating values of D,

$$\frac{vd}{V} = 2A - d,$$

whence $vd = 2AV - dV$,

or $d(v + V) = 2AV$,

and $$d = \frac{2AV}{V+v}, \qquad \textbf{(154.)}$$

where V = velocity of the large gear and v that of the small gear.

In like manner,

$$D = \frac{2Av}{v+V}. \qquad \textbf{(155.)}$$

EXAMPLE.—Given the distance between centers of two gears = 5½ inches. What must be their diameters so that the ratio of their speeds will be as 3 is to 1?

SOLUTION.—By formula **154,** $d = \frac{2 \times 5\frac{1}{2} \times 1}{1+3} = 2\frac{3}{4}$ inches.

By formula **155,** $D = \frac{2 \times 5\frac{1}{2} \times 3}{3+1} = 8\frac{1}{4}$ inches. Ans.

EXAMPLES FOR PRACTICE.

1. (*a*) How many teeth has a 2½-pitch gear, 4 feet in diameter? (*b*) What is the circular pitch of this gear? Ans. (*a*) 120 teeth. (*b*) 1.257 inches.

2. What is the outside diameter of a gear blank from which a wheel is to be cut having 50 teeth 4-pitch? Ans. 13 inches.

3. The pitch diameter of a gear is 25 inches. What is its outside diameter, supposing it to be 6-pitch? Ans. 25.333 inches.

4. A gear blank measures 10.2 inches in diameter and is to be cut 10-pitch. How many teeth should the gear cutter be set to space? Ans. 100 teeth.

5. Given the distance between the centers of two gears = 20″. What must be their diameters so that the ratio of their speeds will be as 6 : 5? Ans. 18.181 inches and 21.818 inches.

1558. Law of Tooth Contact.—The **pitch point** of two gears is the point of contact C, in Fig. 416, of the pitch lines. It is the point at which the line of centers $O\ O'$

intersects the pitch circles. The **point of contact** is the point where two teeth touch each other. In order that two gear-wheels may have the same relative velocities at every point as their corresponding pitch cylinders, the tooth curves must be of such a shape that at the point of contact they will both be at right angles to a line $N\ N$, Fig. 416, passing through the pitch point and point of contact. This line is called the **common normal** to the tooth curves.

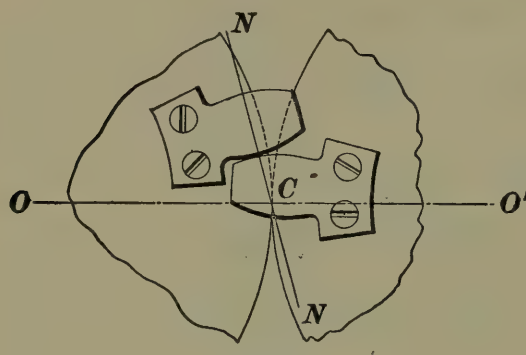

FIG. 416.

1559. The **path of contact** is the curve described by the point of contact during the entire action of a pair of teeth. This curve always passes through the pitch point.

1560. Angle and Arc of Action.—The angle through which a wheel turns from the time when one of its teeth comes in contact with a tooth of the other wheel until the point of contact has reached the line of centers is the **angle of approach;** the angle through which it turns from the instant the point of contact leaves the line of centers until the teeth are no longer in contact is the **angle of recess.** The sum of these two angles forms the **angle of action.** The arcs of the pitch circles which measure these angles are called the arcs of **approach, recess,** and **action,** respectively.

In order that one pair of teeth shall be in contact until the next pair begin to act, the arc of action must be at least equal to the pitch.

THE EPICYCLOIDAL SYSTEM.

1561. The Tooth Outline.—In Fig. 417, let O and O' be the centers of two pitch circles, in contact at the pitch point C; and let a smaller circle, whose center is at o, be tangent to both circles at C. Suppose the three centers to

be fixed, and the circles to move in rolling contact with each other in the direction of the arrows, the circle o carrying a marking point E. E will then describe a curve $E\ d$ on the plane of the circle O, and a curve $E\ e$ on the plane of the circle O'. $N\ N$, the common normal of these curves, will pass through the pitch point C, so they are suitable for tooth outlines.

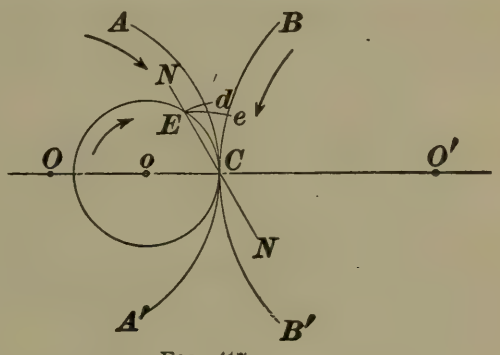

FIG. 417.

NOTE.—In mathematics, the words normal and perpendicular have the same meaning.

It will be observed that the relative motions of the circles are the same as though the small one rolled on the outside of O' and on the inside of O. $E\ e$ is, therefore, the epicycloid of $B\ B'$, and would answer for the face of a tooth of O', while $E\ d$ is the hypocycloid of $A\ A'$, and would serve as a flank for a tooth of O. In like manner, faces for O and flanks for O' could be generated by a circle inside of $B\ B'$.

Since the method of rolling up and using these curves was fully described in the subject of Mechanical Drawing, more will not be said here concerning the process.

1562. Interchangeable Wheels.—It is not necessary that the two generating circles used should be of the same diameter; provided that the flanks and faces which act on each other are generated by the same circle as in the previous case. It is customary, however, to use the same size circle for faces and flanks of both wheels, and where it is desired to make a set of gears, any two of which will run together, the same size circle must be used for all.

1563. In Figs. 418 to 420 are shown the effects of different sizes, describing circles upon the flanks of the teeth. In the first, the circle is half the pitch circle, and the flanks described are radial. In the second, with a smaller circle, the flanks curve away from the radius, giving a strong tooth, and in the third, with a larger circle, the flanks curve

inwards, giving a weak tooth, and one difficult to cut. It would seem, therefore, that a suitable diameter for the describing circle would be one-half the pitch diameter of

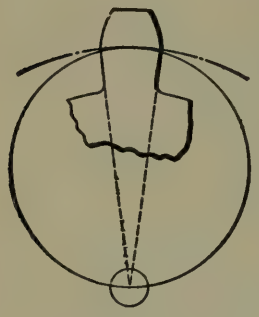

FIG. 418.

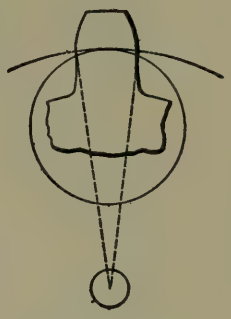

FIG. 419.

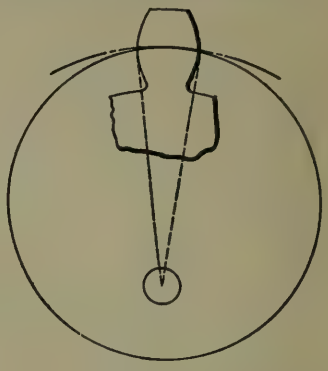

FIG. 420.

the smallest wheel of the set, or one-half the diameter of a 12-tooth pinion, which, by common consent, is taken as the smallest wheel of any set.

It has been found, however, that a circle of five-eighths the diameter of the pitch circle will give flanks nearly parallel, so that teeth described with this circle can be cut with a milling cutter. For this reason, some gear cutters are made to cut teeth based upon a describing circle of five-eighths the diameter of a 12-tooth pinion, or one-half the diameter of a 15-tooth pinion.

It is more common practice to take the describing circle equal to one-half the diameter of a 12-tooth than of a 15-tooth pinion, and this is the size used in this Course.

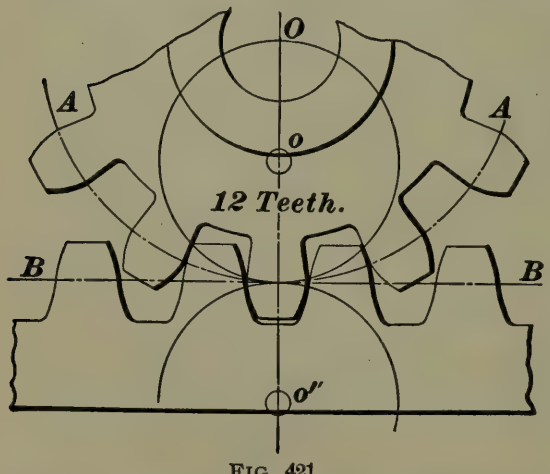

FIG. 421.

1564. Rack and Wheels.—A rack may be considered as a wheel having an infinite diameter. The pitch line of a rack is, therefore, a straight line, and for every revolution of the wheel the rack will travel a distance

equal to the circumference of the wheel. The construction of the tooth is shown in Fig. 421, describing circles for the rack teeth rolling on the line *B B*, and forming cycloids. If both circles are of the same diameter, and are the same as used for generating the tooth curves for an interchangeable series of wheels, the rack will evidently mesh with any of the wheels.

1565. Annular, or internal, gears are those having teeth cut on the inside of the rim. The width of space of an internal gear is the same as the tooth of a spur gear. Two describing circles are used as before, and, if they are of equal diameter, the gear will interchange with spur wheels for which the same describing circle was used.

In Fig. 422 is represented an internal gear with pitch circle *A A*, inside of which is the pinion with pitch circle *B B*. The generating circle *O*, rolling inside of *B B*, will

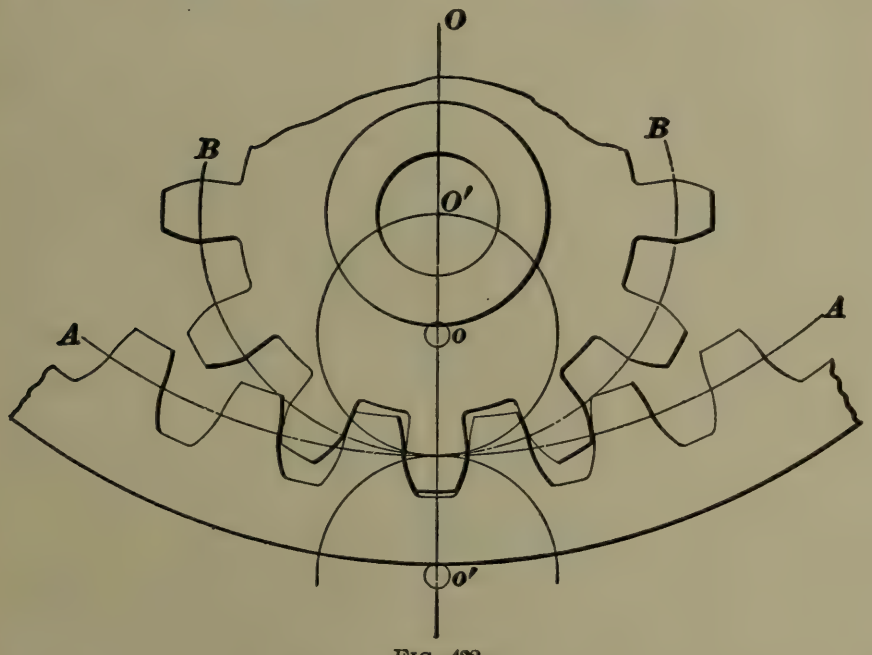

FIG. 422.

describe the flanks of the pinion, and rolling inside of *A A*, faces for the annular wheel. Similarly, the corresponding faces and flanks will be described by *o'*. The only special rule to be observed in regard to epicycloidal internal gears

is that *the difference between the diameters of the pitch circles must be at least as great as the sum of the diameters of the describing circles.*

This is illustrated by Fig. 423. A is the pitch circle of an internal gear, and B of the pinion. Then, for correct action, the difference $(D-d)$ of the diameters must be at least as great as c, the sum of the diameters of the describing circles. To take a limiting case, suppose A to have 36 teeth and B 24 teeth. A wheel with a diameter equal to $D-d$, as shown dotted at E, would, therefore, have 36, minus 24, teeth, or 12 teeth. In the 12-tooth interchangeable system, this latter would be the smaller wheel of the series, and the describing circles would be half its diameter. From this it follows that, if $D-d$, the diameter of E, is not to be exceeded by the sum c of the diameters of the describing circles, B is the largest wheel that can be used with A. *Hence, when the interchangeable system is used, the number of teeth in the two wheels must differ by at least the number in the smallest wheel of the set.* If we wished, for example, to have 18 and 24 teeth, and the gears were to interchange, describing circles, half the diameter of a 6-tooth pinion, would be used, this being taken as the smallest wheel.

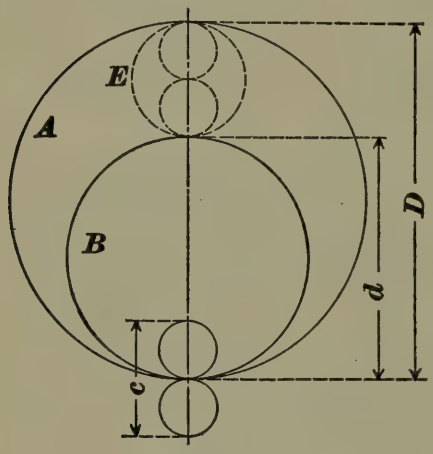

FIG. 423.

THE INVOLUTE SYSTEM.

1566. Let O and O' be the centers of two cylinders that are a short distance apart, and $D\,E$ a cord that has been wrapped several times around them in opposite directions, as shown in Fig. 424. If the circle $D\,D'$ be turned in the direction of the full arrow, the cord $D\,E$ will cause the cylinder $E\,E'$ to turn also in the opposite direction, as shown by the full arrow, and points on the cord $D\,E$ will describe

portions of the involute curve. In order to better comprehend this, imagine a piece of paper to be attached to the bottom of each cylinder, as shown, and that the width of each piece is the same as the distances between the cylinders. Now, suppose that a pencil be attached to the cord at E, the point of tangency of the line $D\ E$ with the cylinder $E\ E'$, in such a manner that it can trace a line on the piece of paper attached to the cylinder $E\ E'$, if a proper motion be given to the cord $D\ E$. Turn the cylinder $D\ D'$ in the direction of the arrow, i. e., rotate it left-handed. The point E will travel towards the cylinder $D\ D'$ in the straight line $E\ D$, and gradually diverge from the cylinder $E\ E'$. During this movement, the pencil attached at E will trace the involute curve m, shown dotted on the piece of paper. In the same manner, if the pencil be attached at D, and the cylinder $E\ E'$ be rotated in the direction of the dotted arrow, the dotted involute m' will be traced on the piece of paper attached to the cylinder $D\ D'$. Suppose that part of the pieces of paper to the right of the curve m and to the left of the curve m' be removed and that $E\ E'$ be rotated until the curve m takes the position $e\ d$; also, that $D\ D'$ be rotated until m' takes the position $g\ h$, the two curves being tangent to each other at k on the line $D\ E$. The cord $D\ E$ will be at right angles to both curves m and m' at the point of contact. The curves will, therefore, be suitable tooth curves, according to the law of tooth contact, if $E\ D$

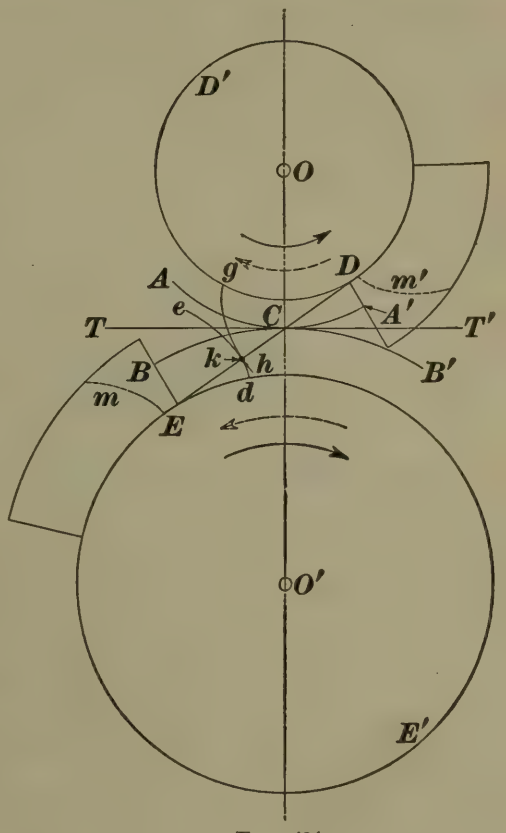

FIG. 424.

always passes through the pitch point. To make it do this, it is simply necessary to connect the two centers by the line $O\,O'$, and through its point of intersection C with $E\,D$ to draw the pitch circles $A\,A'$ and $B\,B'$. Two gears, therefore, with pitch circles $A\,A'$ and $B\,B'$, and with involute teeth formed from circles the size of $D\,D'$ and $E\,E'$, will have the same relative velocity as two pitch cylinders with radii $O\,C$ and $O'\,C$ in rolling contact. Such gears are sometimes called **single-curve gears,** because a single involute curve serves for both face and flank.

If the centers O and O' should now be moved apart so that the pitch circles do not touch, the relative velocities of $D\,D'$ and $E\,E'$ would evidently remain unchanged, since they are connected by the cord $E\,D$. The curves described by point k would also be the same, because they would still be involutes of the same circles. From this, it follows that the distance between the centers of involute gears may be varied without disturbing their relative velocity or the action of the teeth—a property peculiar to the involute system.

1567. Standard Gears.—In Fig. 424, let a line $T\,T'$ be drawn at right angles to $O\,O'$. Then, the angle $D\,C\,T'$, made by $E\,D$ with $T\,T'$, is called the **angle of obliquity,** and the circles $D\,D'$ and $E\,E'$, from which the curves are derived, and which are tangent to $E\,D$, are called the **base circles.** In standard interchangeable gears, based upon the diametral pitch, the angle of obliquity is taken at 15°, which brings the distance between the base circle and the pitch circle at about $\frac{1}{6\,0}$ the pitch diameter. It would be well to use these values for all gears.

1568. Fig. 425 shows two standard gears, $A\,A$ and $B\,B$ being the pitch circles, and $D\,D'$ and $E\,E'$ the base circles. $T\,T$ was drawn through C at right angles with $O\,O'$, and $N\,N$ was drawn through C, making an angle of 15° with $T\,T$. The path of contact is along the straight line $N\,N$, and the distance along $N\,N$ from a point on one tooth to a corresponding point on the next is called the

normal pitch. The parts of the teeth above the base circle are involutes, and the flanks below the base circle are radial.

1569. Interference takes place when a part of one tooth crowds another at some point during the action, so that the gears will not run. To determine whether any pair of involute gears will work well together, draw lines $O\ D$ and $O'\ E$, Fig. 425, perpendicular to the line of action $N\ N$. So long as the intersections of the addendum circles (shown dotted) and the line of action fall between points E and D, as at e, there will be no interference. If they fall outside, as at d, both wheels will interfere, while, if the

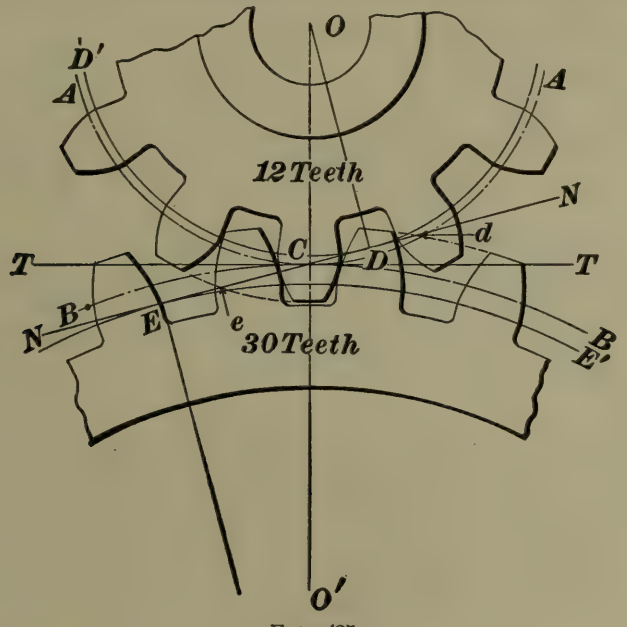

FIG. 425.

addendum circle of only one gear cuts the line of action outside, the teeth of that gear will interfere. Interference can be avoided by slightly rounding the ends of the teeth on the larger wheels, the amount to be determined by drawing the teeth in different positions. In the interchangeable system, all the gears are made to run with the smallest one of the set by giving epicyclodial points to the interfering teeth, so that they will work smoothly with the radial flanks.

1570. The **smallest wheel** in the interchangeable series has 12 teeth, the same number as in the epicycloidal

system. The reason for this is that it is the smallest wheel having a contact of the parts of the teeth which are true involute curves during an arc of action, equal to the circular pitch. Wheels of ten teeth will run together, however, although the action is not correct.

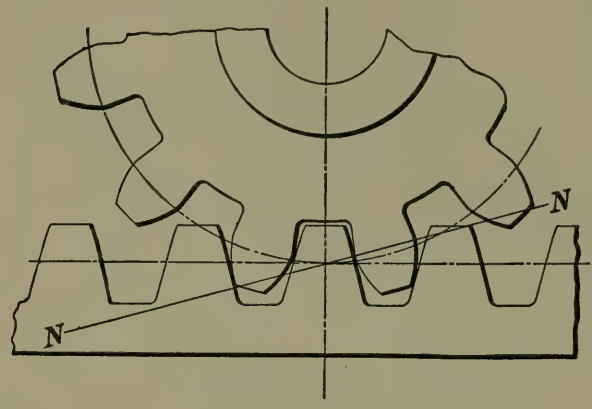

FIG. 426.

1571. The involute rack (see Fig. 426) has the sides of the teeth at an angle of 15° with the pitch line, or perpendicular to the line of action $N\,N$. The ends of the teeth should be rounded to run with the 12-tooth pinion.

1572. Internal Gears.—The construction is shown in Fig. 427. The obliquity (= 15°) is $T\,C\,N$, and the base

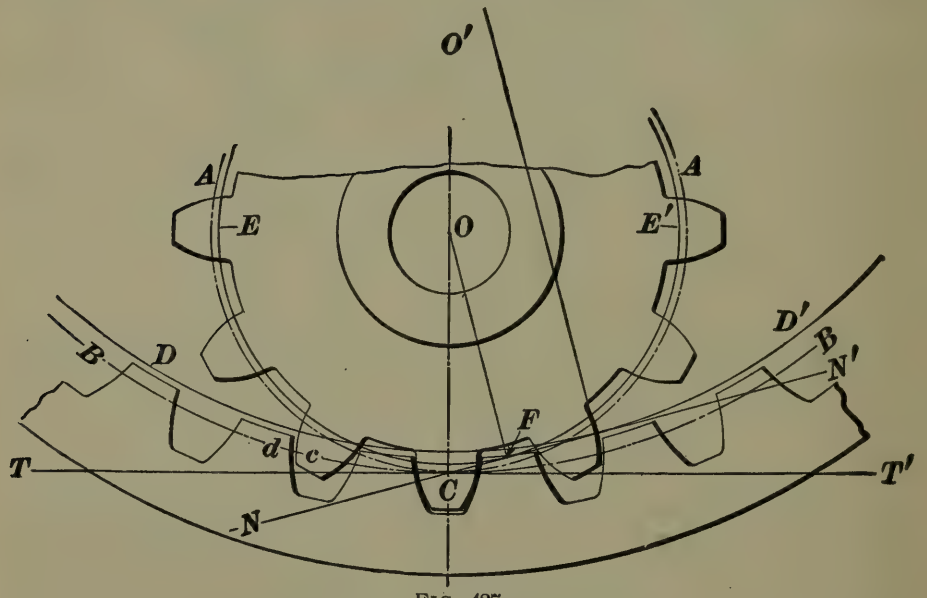

FIG. 427.

circles $E\,E'$ and $D\,D'$ are drawn tangent to the line of action $N\,N'$, about the centers O and O', respectively. The addendum circle for the internal gear should be drawn

through F, the intersection of the path of contact $N N'$ with the perpendicular $O F$ drawn from the center of the pinion. The wheel will then be nearly, or quite, without faces, and the teeth of the pinion, to correspond, may be without flanks. If the two wheels are nearly of the same size, points c and d will interfere, which can be avoided by rounding the corners.

1573. In General.—Formerly, the epicycloidal system was used almost exclusively, but of late the involute is rapidly gaining in favor. Its distinctive features are, the adjustability of the centers of the wheel and the great strength of the tooth. The chief objection that has been raised against involute teeth is the obliquity of action, causing increased pressure upon the bearings. Where the obliquity does not exceed 15°, however, this objection is not a serious one.

BEVEL GEARS.

1574. In drawings of spur gears, the tooth curves in the epicycloidal system are obtained by causing the generating circles to roll upon the pitch circles. The tooth curves, however, represent curved surfaces perpendicular to the plane of the paper and the pitch circles, and generating circles represent the ends of cylindrical surfaces which are in rolling contact. It may be assumed, therefore, that tooth surfaces are generated directly by generating *cylinders* rolling upon pitch *cylinders*. In bevel gearing, the pitch surfaces are cones, which, when in rolling contact, have their apexes at a common point, and it may be assumed that the tooth surfaces are generated by generating *cones*, rolling upon the pitch cones.

In spur gearing, the teeth of two wheels bear along straight lines, which are perpendicular to the plane of the paper. In bevel gearing, the teeth are in contact along straight lines, *but these lines are perpendicular* to the surface of a sphere, and all of them pass through the center of the sphere, which is at the point where the apexes of the two pitch cones meet. That this is the case will now be explained.

1575. In Fig. 428, let *C O B* represent a pitch cone, the part *C D E B* being the pitch surface of a bevel gear, and let *A O C* be the generating cone. If we suppose the generating cone to describe the tooth surface *m n o p* by rolling upon the pitch cone, the line *n o*, representing the outer edge of the tooth, will lie upon the surface of a sphere whose radius is *O n*. For the point *n*, which describes this line, is always at a fixed distance from the center *O*; hence, every point in the line *n o* is equally distant from *O*, and as, in a spherical surface, every point is equally distant from a point within called the center, it follows that *n o* must lie upon a spherical surface.

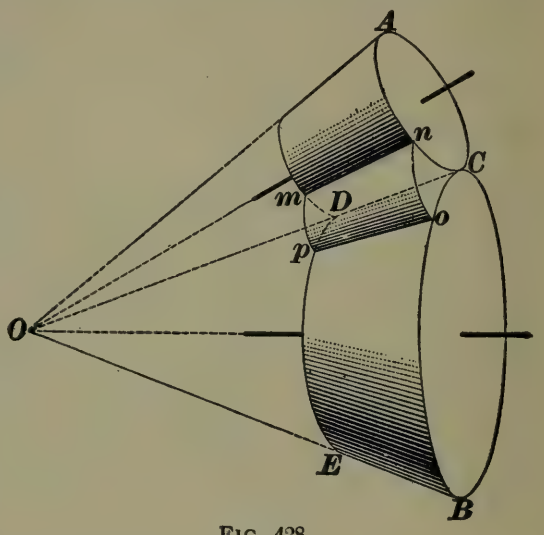

FIG 428.

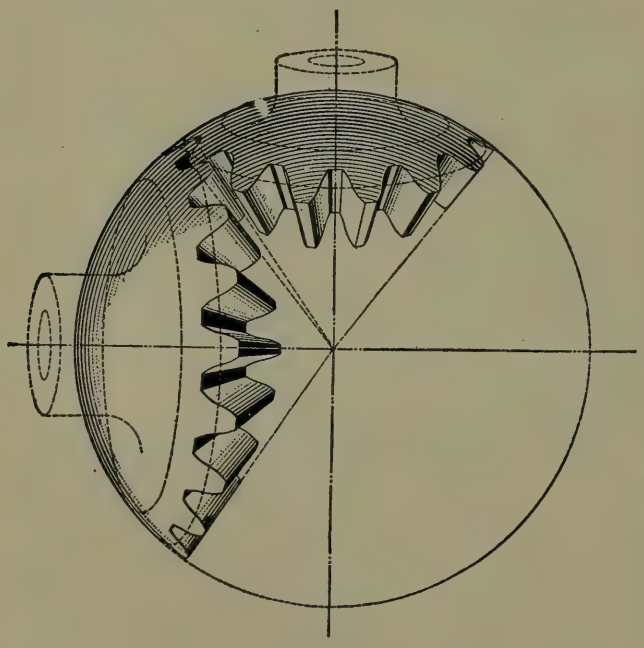
FIG. 429.

1576. To be theoretically exact, therefore, the tooth curves for bevel gears should be traced upon the surface of a sphere, as shown in Fig. 429. This method is not a practical one, however, and would have no advantage over what is known as **Tredgold's approximation**, which is much simpler and is universally used.

By this method, the tooth curves are drawn on cones tangent to the spheres at the pitch lines of the gears, as shown in Fig. 430. The process is simply to develop or unwrap the surfaces of the cones, the unwrapped surfaces being represented by $A\ B\ C$ and $C\ D\ E$ in the figure. The length of the arc $A\ B\ C$ is equal to the length of the pitch circle $A'\ C$, and the arc $C\ D\ E$ is equal to the pitch circle $C\ E'$. The gear teeth are then drawn upon the unwrapped surfaces, precisely

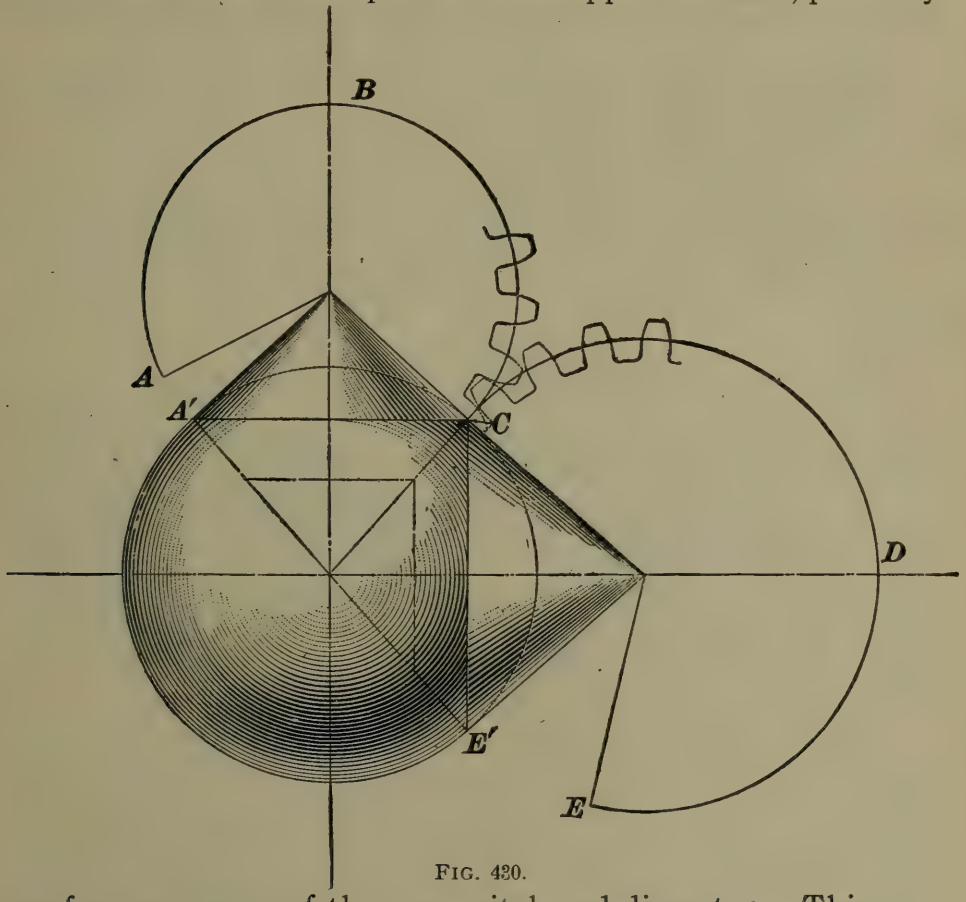

FIG. 430.

as for spur gears of the same pitch and diameter. This process is fully described in the subject of Mechanical Drawing.

The teeth, as laid out by Tredgold's method, will vary somewhat from the shape of the spherical teeth, though usually the variation is slight. The actual error of the system, however, is less than this difference, for though the tooth curves on each gear may not be the same as those on the sphere, the amount of their divergence from perfect curves to transmit a uniform motion will be of no practical importance.

WORM GEARING.

1577. A **worm** is a screw made to mesh with a wheel called a **worm-wheel**, the two forming **worm gearing**, or **screw gearing.** Worm gearing possesses the following characteristics:

I.—The velocity ratio depends upon the pitch of the screw, i. e., the distance the screw advances in one revolution, and not upon the diameters of the pitch cylinders. *If the worm is single-threaded, it must make as many turns as there are teeth in the wheel for every revolution of the latter; if double-threaded, it will make one-half as many turns.*

II.—The direction in which the worm-wheel turns depends upon whether the worm has a right-hand or left-hand thread.

III.—The end thrust of the screw causes the motion of the wheel.

1578. Form of Teeth.—Fig. 431 illustrates a worm and wheel. It will be noticed that in the longitudinal section, taken through the worm, the threads appear to be like involute rack teeth. The worm is usually made in a screw-cutting lathe, and as it is easier to turn the threads with straight sides, it is better that they should be of the involute form. Involute teeth should then be used on the wheel of a pitch to correspond with the threads on the worm.

1579. Pitch.—The circular-pitch system is almost universally used for worm gearing, because lathes are seldom provided with the correct change gears for cutting diametral pitches. It is not so inconvenient, however, in the case of worm gearing as with the spur gearing. If the diameter of the worm-wheel should come in awkward figures, the diameter of the worm can be made such that the distance between centers will be any desired dimension. The circular pitch of the gear must equal the pitch of the worm.

1580. Close-Fitting Worm and Wheel.—To make a close-fitting wheel, a worm is made of tool steel and then fluted and hardened similar to a tap. It is almost a duplicate

of the worm to be used, being of a slightly larger diameter to allow for clearance. This cutter, or **hob**, is placed in mesh with the worm-wheel, on the face of which notches have been cut deep enough to receive the points of the teeth

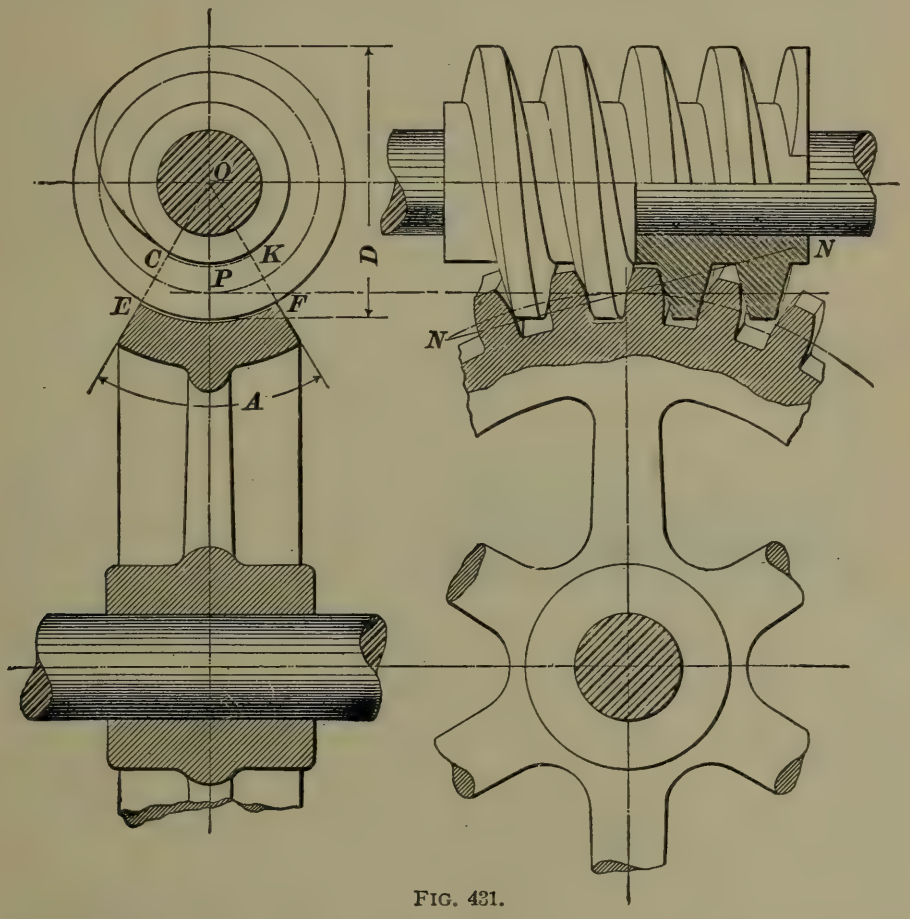

FIG. 431.

of the hob. The hob is then made to drive the wheel, and is dropped deeper into it at each revolution of the latter until the teeth are finished.

Fig. 431 represents a close-fitting worm and wheel. The pitch circles of each are in contact at P. The outside diameter D of the worm may be made four or five times the circular pitch. The arcs $C\,K$ and $E\,F$ are drawn about O and limit the addendum and root of the wheel teeth, the distance between them being the whole depth of the teeth. End clearance is allowed the same as for spur gearing. The

angle A is generally taken at either 60° or 90°. The whole diameter of the wheel blank can be obtained by measuring the drawing.

The object of hobbing a wheel is to get more bearing surface of the teeth upon the worm thread, making the outline of the teeth something like the thread of a nut.

1581. Worm-Wheels Like Spur Gears.—When worm-wheels are not to be hobbed, there is little to be gained by making the face of the wheel concave to fit the worm. It is better to construct the blanks like a spur-wheel blank. The teeth can then be cut in a straight path diagonally across the face of the blank to fit the angle of the worm thread.

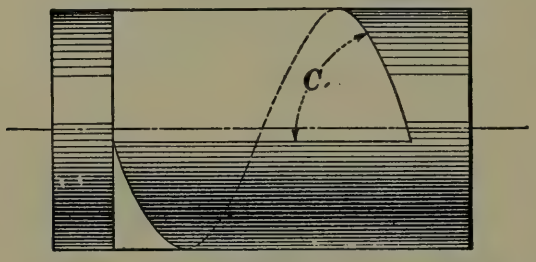

FIG. 432.

This angle may be obtained as follows: Fig. 432 represents a right-angled triangle cut out of paper and wrapped around a cylinder. The hypotenuse of the triangle forms the thread and, as the base is parallel with the axis of the cylinder, the angle of the worm thread is the angle C between the hypotenuse and the base of the triangle. *Hence, the tangent of the angle of the thread = the circumference of the cylinder, divided by the pitch.*

In Fig. 343 is shown a graphical method. The lines $a\ a$, $b\ b$, etc., are the development of the screw. Angle C' = angle C is the proper angle for the teeth of the worm-wheel. The distance $P' = P$, parallel to the axis of the screw, is the pitch.

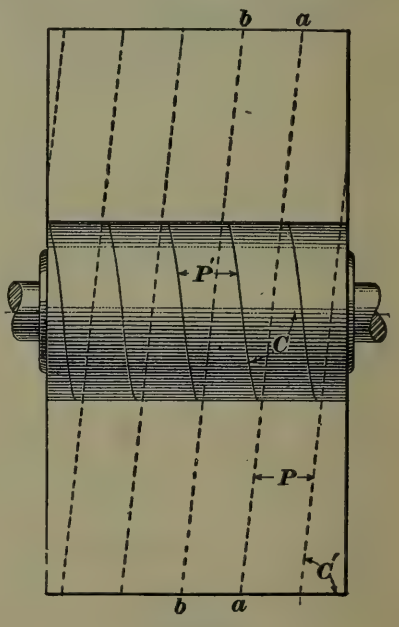

FIG. 433.

1582. Interference.—The same rules apply here that were given under the involute system. When the worm is to work with a wheel having a smaller number of teeth than it was designed for, interference will occur. It can be avoided by rounding the tops of the threads of the worm, but it is easier to make the wheel blank somewhat larger than is called for by the number of teeth. The teeth will then have very short flanks, the action being almost entirely upon the faces, where interference cannot occur.

RATCHET WHEELS.

1583. Fig. 434 represents a ratchet wheel A turning upon the pin O. C is a vibrating lever carrying the **pawl, click,** or **catch** B, which acts upon the teeth of the wheel. As the arm moves back, or right-handed, the click lifts and slides over the points of the teeth; when it returns, the click drops against a tooth and carries the wheel with it.

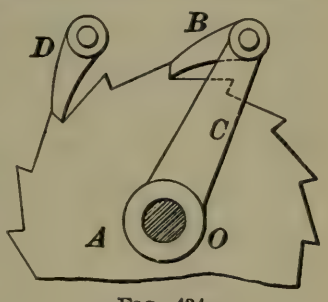

FIG. 434.

In case it should be desired to prevent the wheel from moving backwards when the click is moving backwards, a fixed pawl, similar to D, would be made to bear on the wheel and drop behind each tooth as it passed under. Here, D would allow a left-hand, but prevent a right-hand rotation of A.

1584. In Fig. 434, in order that the arm may produce motion in the wheel, its vibration must be at least sufficient to cause the latter to advance one tooth; but by arranging several clicks in the same lever it becomes possible to give a motion to the wheel corresponding to less than one tooth for each vibration of the arm. Fig. 435 shows such a construction, B, B', and B'' being proportioned so that they come into action alternately. Thus, when the wheel A has moved back an amount corresponding to one-third of a tooth, the click B' will be in contact with tooth

b', and, if the arm should then move the wheel forwards a distance of at least one-third a tooth and then return to its former position, click B'' would fall behind b'', ready to turn the wheel. Thus arranged, a slight motion is obtained and comparatively large teeth may be used. A neater construction than the above would be to put all the clicks on one pin side by side, in which case a wide wheel would be necessary.

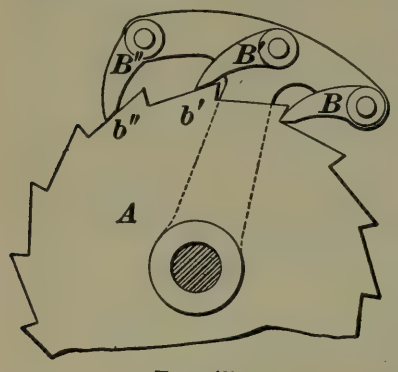

FIG. 435.

1585. Reversible Clicks.—In feed mechanisms, such as are used on shapers and planers operating on metal, and which must be driven in either direction, an arrangement like that in Fig. 436 is used. Wheel A has radial teeth, and the click, which is made symmetrical, can occupy either position B or B'. In order that the click may be held firmly against the ratchet wheel, its axis is provided with a small triangular piece, shown dotted, against which is a flat end-presser, always urged upwards by a spring (also shown dotted). Whichever position B may be in, it will be held against the wheel.

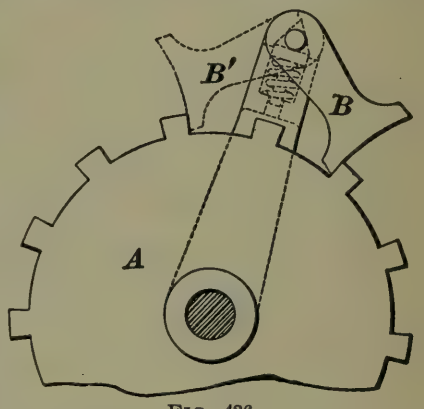

FIG. 436.

1586. Adjusting the Motion.—Ratchet wheels are largely used on machines requiring a "feed." In all such cases they must be so arranged that the feed can be easily adjusted. This is often done by changing the swing of the lever C, Fig. 434, which is usually connected by a rod with a vibrating lever, having a definite angular movement at the proper time for the feed to occur. This lever is generally provided with a T slot, in which the pivot for the rod can be adjusted by means of a screw and nut. By varying the

distance of the pivot from the center of motion, either one way or the other, the swing of the arm C can be regulated and the feed made to occur in either direction desired.

1587. Another method of adjusting the motion is shown in Fig. 437. The wheel turns upon a stationary shaft or stud O, and the end of the shaft is turned to a smaller diameter than the rest and is threaded, thus forming a shoulder against which an adjustable shield S can be clamped by the nut n. Back of the wheel is the arm, also loose on the shaft, carrying the click B, which latter should be of a thickness equal to that of the wheel, plus that of the shield. The teeth of the wheel may be made of a shape suitable to gear with another wheel to which the feed motion will then be imparted, or another wheel back of and attached to the one shown could be used for the purpose.

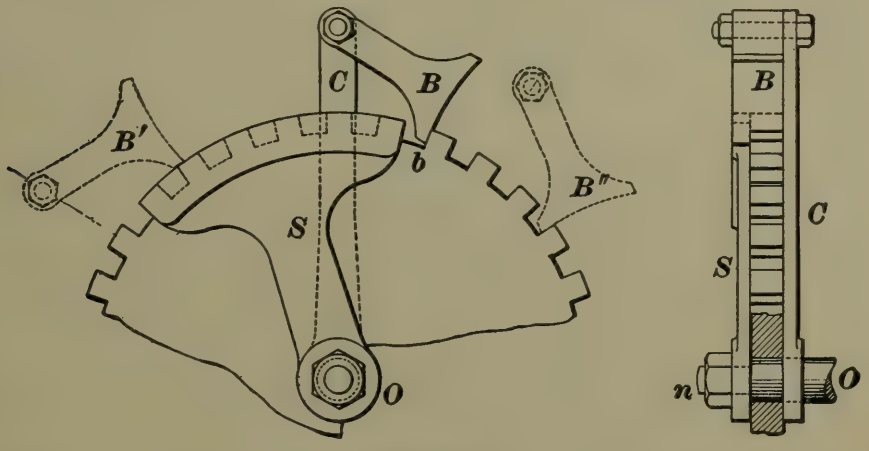

FIG. 437.

The extreme left-hand position of B is shown at B'. Here the click rides on the shield and does not come in contact with the teeth of the wheel. When the click comes to the right-hand edge of the shield, however, it will drop into contact at b; and, if B'' is the extreme right-hand position, the wheel will be turned through a space corresponding to three teeth. If the shield should be turned to the right, a smaller number of teeth would be moved each time; if it should be turned to the left, a feed of four or more teeth, up to the full capacity of the stroke, could be obtained; while, with

the shield in its mid-position, it would carry the click during the whole swing of the arm and there would be no feed.

1588. Ratchet and Screw.—Where ratchets are employed in the feed motions of machine tools, they are made to operate a screw, which in turn drives the "head" carrying the tool.

EXAMPLE.—A ratchet having 80 teeth is attached to the end of a screw having six threads per inch. If the click is set to move the ratchet three teeth for every stroke of the arm, how much "feed" would the tool have, supposing it to be moved directly by the screw?

SOLUTION.—One turn of the screw would move the tool $\frac{1}{6}$ inch. But for each stroke, the ratchet and, hence, the screw, moves $\frac{3}{80}$ of a turn, and the tool would travel $\frac{3}{80} \times \frac{1}{6} = \frac{1}{160} = .00625$ inch. Ans.

MACHINE DESIGN.

INTRODUCTORY.

THE DESIGN OF DETAILS.

1901. Rules and formulas for designing many of the most common details of machines are given in the following pages. In some cases these rules are based on considerations of strength, as developed in the subject of Strength of Materials; in others, the wear to which the parts are to be subjected has been the principal element in determining the given proportions. In all cases, however, the practice of successful designers has been followed in preference to mere theoretical principles.

1902. The first work a young designer is called upon to do is usually that of making drawings of details of machines, the general plans of which have been developed by his superiors. He will be given the leading dimensions of these details, and will be required to make a drawing from which the pattern-makers, blacksmiths, and machinists can finish them ready for their places in the completed machine.

1903. In most shops such parts as bolts, nuts, screws, pipe fittings, etc., and often other simple parts of machines, are bought from factories, where they are made in large quantities by special machinery. If the shop is a large one, there may be a separate department where these parts are made according to fixed standards. The designer should know what the practice of the shop in this regard is, and in all cases make his details to conform with these standards. He should also know the kind of material available, the methods employed by the shop in working this material, and

For notice of copyright, see page immediately following the title page.

the capacity and principal dimensions of the tools and appliances for doing the work, in order that the detail as designed may be built in the most economical manner. When designing a machine part it is well to keep the processes that will be used in making it in mind; this will often prevent constructions that would be very difficult and expensive if built with the machinery in use in the shop for which the design is made.

1904. In making designs of details it is always advisable to draw them to as large a scale as can be used conveniently. The scales commonly used for small details are full size; and for larger ones 6 inches, 3 inches, or $1\frac{1}{2}$ inches $= 1$ foot may be used. A scale of 4 inches or 2 inches $= 1$ foot should never be used if it can possibly be avoided.

1905. Remember that the object of a detail drawing of a machine part is to show the workman in the clearest possible manner how the part is to be made and finished, so that it will take its proper place in the completed machine and do the work for which it is intended. The designer must, therefore, be very careful to make the drawing show the form and dimensions of each portion as clearly as possible; the drawing should also show plainly the kind and quality of material to be used, and the finish, if any, to be given the different surfaces. Use sections wherever the general views do not show the form with perfect clearness.

It is well for a designer to imagine himself in the position of a man in the shop who knows nothing of the machine, and study his drawing carefully to see if anything can possibly be lacking that will be required to make the ideas he wants carried out perfectly clear.

1906. Ordinary dimensions are expressed in feet and inches, and the fractions $\frac{1}{2}$, $\frac{1}{4}$, $\frac{1}{8}$, $\frac{1}{16}$, etc., of an inch. Never use the fractions $\frac{1}{3}$, $\frac{1}{5}$, or $\frac{1}{6}$ in dimensions, as the scales which mechanics use are not divided in these fractions. The most common scales in use by mechanics for ordinary work are two-foot rules divided into inches, numbering from 1 to 24;

for this reason many draftsmen give all dimensions less than two feet in inches and fractions of an inch, and dimensions greater than two feet in feet, inches, and fractions of an inch.

Unless great accuracy is required, decimals are never used in giving dimensions. If decimal values are obtained from the calculations they are expressed in the nearest $\frac{1}{8}$, $\frac{1}{16}$, or $\frac{1}{32}$ of an inch, according to the degree of accuracy required. In particular cases, where extreme accuracy is needed, the dimensions may be expressed in decimals; as, for example, the pitch of gear teeth.

THE GENERAL DESIGN OF A MACHINE.

1907. The methods to be employed in the general design of a machine will vary so much with different conditions that no fixed rules or methods of procedure can be given. The first thing necessary is a thorough knowledge of the work the machine must do, together with its location and surroundings and the conditions under which it must do its work. Keeping these in mind, the designer must apply his knowledge of the principles of applied mechanics, strength of materials, and the design and construction of details, in such a way as to accomplish the desired end in the simplest and most direct manner consistent with the conditions imposed.

All machines consist of different combinations of a few simple principles; and, in order to be successful, the designer must become thoroughly acquainted with these principles and the relation they bear to each other. A study of machines that have been built for similar work is of great assistance in suggesting ideas for the new machine.

In many cases it will be necessary to make more or less complete drawings of a number of different plans, before a satisfactory result will be obtained. A combination that appears feasible at first will be found to be impracticable when drawn out in detail, and the parts proportioned so as to give the necessary strength. In other cases the motion of some part may be found to be limited in such

a way as to interfere with the proper working of the machine. The difficulty or expense of manufacture may also make some otherwise good design impracticable.

1908. In all work, whether designing details or more complicated combinations, keep all calculations, notes, and sketches in such a form that they can be preserved for future reference. Date these notes and give them such titles as will be required to make their purpose perfectly clear. In this way ideas that may be impracticable for the particular case for which they were originally developed can be kept for a possible future use; and the results of many hours spent in calculation will be preserved so as to make a repetition unnecessary. Some engineering establishments provide their draftsmen with books made of manila paper bound in board covers; and all calculations, notes, and sketches are made in these books instead of on loose sheets of paper that will soon be lost.

1909. The following practical rules are often neglected by inexperienced designers:

Make all parts that are subject to wear or breakage accessible for the purpose of inspection, repairs, or renewal.

Provide means for adjusting all parts that are subject to wear.

Make careful provision for lubrication.

Use links and rotating pieces for guiding motion in preference to slides.

Use cranks, levers, belts, and gear-wheels for transmitting motion in preference to cams, screws, or worm-wheels.

Wherever possible, make the motion of all parts positive; that is, avoid the use of weights or springs for producing motion.

Use through bolts or T *head bolts instead of tap bolts or studs, wherever it can be done.*

1910. Designers are often required to furnish an estimate of the weight and cost of a machine from the draw-

ings. This is done in the following manner: The volume of the different details is estimated by means of the principles of mensuration; the weight can then be obtained by multiplying the volume of each piece by the weight of a cubic unit of the material of which it is composed, as given in a table of specific gravities. When the weights are known, the cost of the material is easily found from the known market values. The time that will be required for fitting and finishing the different pieces is then estimated and charged for according to the rates paid for that work. In this way the cost of the machine may be estimated with a degree of accuracy that will depend on the knowledge the estimator has of the time required to do different kinds of work in the shops, and his skill in making approximate calculations of the volumes of irregular-shaped bodies.

MATERIALS USED IN MACHINE CONSTRUCTION.

1911. Cast Iron.—This metal, which has already been briefly referred to in Art. **1332**, etc., is used very largely in the construction of machine parts, particularly those that must be massive; for example, the frames and beds of engines, lathes, planers, etc. It is not well suited for parts subjected to shocks or for parts requiring strength and elasticity.

The great advantage of cast iron is the ease with which it may be given any desired form. Shapes that could not possibly be forged from wrought iron may be cast with comparative ease. The operation of casting is as follows: A pattern is first made of the exact shape of the required part; this pattern is usually made of pine, though metal is sometimes used when the castings are small and a great number are to be made. The pattern is placed in a bed of sand or loam, in which it leaves, after being removed, an impression or cavity called the *mold*. The melted metal is poured into the mold, and, after cooling, the casting is with-

drawn and finished to the required dimensions. Cast iron contracts in cooling about *one-eighth of an inch per foot in each direction;* on account of this contraction, commonly called the **shrinkage,** the pattern must be made that much larger than the required casting. In practice this is always done by using a **shrink rule** in constructing the pattern. The shrink rule is about $\frac{1}{8}''$ longer per foot than the standard rule.

1912. A serious difficulty experienced in the use of cast iron is its liability to be thrown into a state of internal stress, on account of inequality of cooling after being poured into the mold. It is a matter of experience that the amount of contraction depends upon the size and thickness of the casting. In general, thick and heavy parts contract more than thin ones; consequently, a casting composed of both thick and thin parts will sometimes differ from the form desired. Again, one part of a casting may cool and solidify while another part is still in a molten condition. The contraction of the latter must, therefore, strain the part already solidified. The casting is thus thrown into a state of internal stress which must to some degree reduce its effective strength.

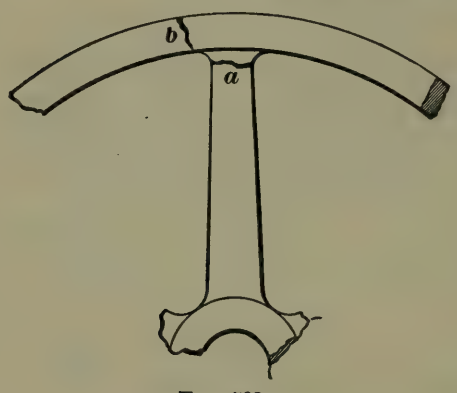

FIG. 592.

Take, for example, the case of a pulley. When the rim is thin, but rigid, it is liable to contract and solidify first, and the subsequent contraction of the arm may induce a fracture, as shown at *a*, Fig. 592. If, however, the arms set first, the subsequent contraction of the rim may cause a fracture, as shown at *b*.

1913. When pulleys are cast with thin rims which are not rigid, the casting often takes the form shown in Fig. 593. The rim is drawn in at the points where it joins the arms, because the arms solidify and contract

after the rim has set, and the latter, not being sufficiently rigid to withstand the pull of the arms, is distorted.

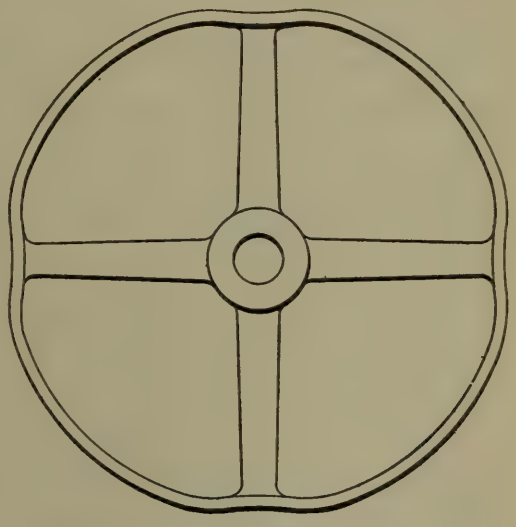

FIG. 593.

These internal stresses make cast iron an unreliable material for the construction of parts requiring strength; and it should be the aim of the designer to prevent these stresses as far as may be by making all parts that are to be cast as uniform in thickness as possible, and avoid having a large boss, or hub, appear in a comparatively thin part, or having a very thick part meet a very thin one.

1914. It is found that, in cooling, the iron crystals arrange themselves perpendicularly to the surface of the

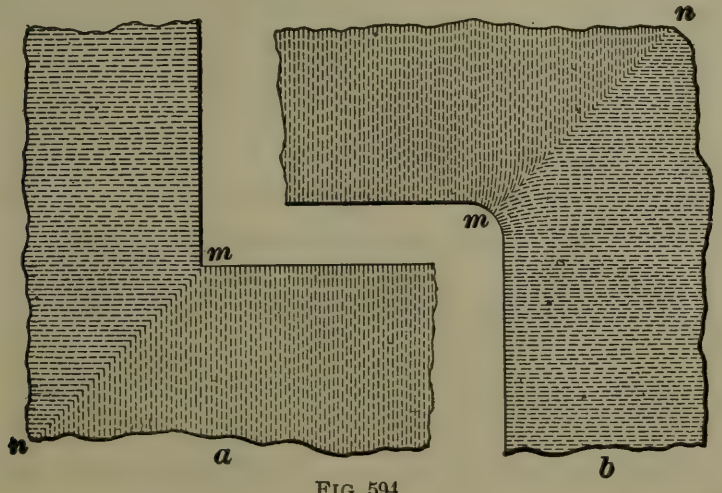

FIG. 594.

casting. For this reason an inside angle (*a*, Fig. 594) is a source of weakness, the casting having a tendency to break through the line *m n*. Such corners should be rounded, as shown at *b*, Fig. 594, in which case the crystalline arrangement renders the casting much stronger.

1915. Chilled castings are made by lining the whole or a part of the mold with cast iron which is protected by a thin coating of loam. The cast-iron lining is a good conductor of heat, and the molten iron is thus cooled off quickly, or *chilled.* The sudden cooling of the casting prevents the carbon from separating from the iron with which it is in chemical combination, and as a result the portion of the casting which is chilled is of white, hard iron. Usually, the chilling extends to the depth of from $\frac{1}{8}$ to $\frac{3}{8}$ inch; the interior of the casting is of soft, gray cast iron, which is best for resisting shocks, while the chilled surface is very hard and durable.

For malleable cast iron see Art. **1337.**

1916. Wrought Iron and Steel.—The leading properties of these metals have already been given. They are used for parts of machines requiring strength and elasticity, such as shafts, bolts, piston rods, and connecting-rods of engines, etc.

Wrought iron or steel machine parts are forged or rolled to approximately the required shape, and then finished upon the lathe, planer, or other tool. Parts may also be cast of steel the same as cast iron. When so made they are called **steel castings.**

1917. Copper.—This metal is used principally for making tubes, steam pipes, expansion joints, and similar details, for condensers, boilers, engines, etc. It can be hammered or rolled into sheets or drawn into wire; it may be cast or forged, but can not be welded. The tenacity of cast copper is about 21,000 lb. per square inch; of forged copper, about 30,000 lb. per square inch. The tenacity of copper may be increased by hammering, wire-drawing, or rolling, but it is at the same time rendered hard and brittle. The toughness may be restored by annealing.

1918. Bronze, or Gun-Metal.—This is an alloy composed of copper and tin, in the proportion of 90 parts of copper to 10 parts of tin. The metal has a tenacity of about 35,000 lb. per square inch. It is largely used for the

bearings of rotating machine parts. The bronze being softer than the iron wears more rapidly, and thus lengthens the life of the rotating part. The hardness of the bronze may be increased by increasing the proportion of the tin; for bearings required to sustain a great pressure the bronze may be composed of 86 parts of copper to 14 parts of tin. A very soft bronze is composed of 92 parts of copper and 8 parts of tin. This quality of bronze is used for making gear-wheels which are subjected to severe shocks.

1919. Phosphor-Bronze.—This is made by alloying ordinary bronze with from 2 to 4 per cent. of phosphorus. It is now being largely used instead of ordinary bronze, and is also employed in place of iron and steel in the construction of propeller blades, pump rods, etc. The softer phosphor-bronze has a tensile strength of about 45,000 lb. per square inch; the hardest varieties may have a tenacity as high as 65,000 lb. per square inch, while hard, unannealed wire has, in some cases, a tenacity of 140,000 lb. per square inch.

1920. Manganese-Bronze.—This is also called white bronze, and is an alloy of ordinary bronze and ferromanganese. It is equal in strength and toughness to mild steel, and may be forged into nuts, bolts, rods, etc. It resists the corroding action of sea water, and is, therefore, much used for propellers. Both manganese-bronze and phosphor-bronze are largely used in marine work.

1921. Brass.—Brass is composed of copper and zinc in the proportion of two parts of the former to one of the latter. Its tenacity is about 25,000 lb. per square inch. Brass is used for condenser tubes and for various fittings, such as valves, cocks, etc.

1922. Wood.—This material is used to a limited extent in machine construction; for example, oak and lignum-vitæ are sometimes used for bearings; beech and hornbeam for cogs of mortise wheels; pine, cherry, and mahogany for patterns.

FASTENINGS.

SCREWS, BOLTS, AND NUTS.

1923. Screws are used in machine construction for three different purposes:

1. As a fastening for clamping or joining parts together. 2. For the transmission of motion. 3. For producing pressure. Screws used as fastenings are called **bolts.**

FORMS OF SCREW THREADS.

1924. The V Thread.—Screw threads are usually triangular or square in section, the triangular form being best for bolts, and the square form best for screws transmitting motion. The **Seller's triangular** or **V thread,** commonly called the **American thread,** or **United States standard,** which is used in the United States, is shown in Fig. 595. Fig. 596 is an enlarged section of the thread.

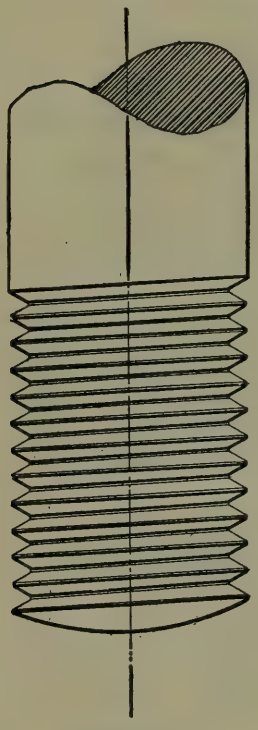

FIG. 595.

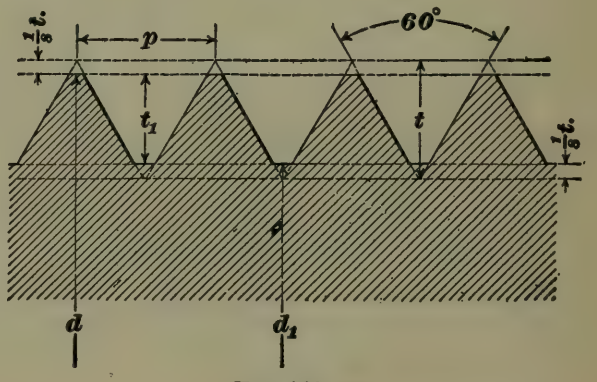

FIG. 596.

The *angle* between the sides of the thread is 60°. The distance p from one thread to the next is called the **pitch** of the screw. As shown in the figure, a section of a single thread is an equilateral triangle, the altitude of which is t; to form the United States standard thread $\frac{1}{8}$ the altitude

of the triangle is cut off from the apex, and the angle at the root is filled in to a like depth. Hence, the *real depth* of the thread, t_1, is $\frac{3}{4}$ the altitude of the triangle; that is, $t_1 = \frac{3}{4}\, t$.

$$\text{But} \quad t = p \cos 30° = .866\, p;$$

$$\text{hence,} \quad t_1 = \tfrac{3}{4}\, t = .65\, p. \quad \textbf{(207.)}$$

1925. **V** threads are sometimes cut without the flat top and bottom, the section being a full equilateral triangle; in this case they are commonly called **sharp V threads.**

1926. The pitch of the thread depends upon the diameter of the bolt; it may be obtained approximately by the following formula, in which d represents the diameter of the bolt:

$$p = .24\sqrt{d + .625} - .175''. \qquad \textbf{(208.)}$$

The diameter d_1 at the root of the thread may be found by the following formula:

$$d_1 = d - 2\, t_1 = d - 1.3\, p. \qquad \textbf{(209.)}$$

The diameter d_1 must always be used in calculating the strength of a bolt.

Letting n represent the number of threads per inch in a screw, we have

$$n = \frac{1}{p}. \qquad \textbf{(210.)}$$

$$\text{Consequently,} \quad d_1 = d - \frac{1.3''}{n}. \qquad \textbf{(211.)}$$

EXAMPLE.—The external diameter of a bolt is $1\frac{1}{8}$ inches. Find the pitch, the number of threads per inch, the depth of thread, and the diameter of bolt at root of thread.

SOLUTION.—

$p = .24\sqrt{1.375 + .625} - .175'' = .164''$.

$n = \frac{1}{p} = \frac{1}{.164} = 6$, nearly. Use 6 threads per inch, then, $p = \frac{1}{6} = .167''$. Ans.

$t_1 = .65\, p = .65 \times .167 = \frac{7}{64}''$, nearly. Ans.

$d_1 = d - 2\, t_1 = 1\frac{1}{8} - \frac{7}{32} = 1\frac{5}{32}''$. Ans.

Table 43 gives the number of threads per inch, diameter of bolt at root of thread, and effective area of bolt at root of thread, United States standard sizes:

TABLE 43.

Diameter of Screw in Inches. d.	Number of Threads per Inch. n.	Diameter at Bottom of Threads in Inches. d_1.	Area at Bottom of Threads in Square Inches. a.
$\frac{1}{4}$	20	.185	.0269
$\frac{5}{16}$	18	.240	.0452
$\frac{3}{8}$	16	.294	.0679
$\frac{7}{16}$	14	.345	.0935
$\frac{1}{2}$	13	.400	.1257
$\frac{9}{16}$	12	.454	.1619
$\frac{5}{8}$	11	.507	.2019
$\frac{3}{4}$	10	.620	.3019
$\frac{7}{8}$	9	.731	.4197
1	8	.838	.5515
$1\frac{1}{8}$	7	.939	.6925
$1\frac{1}{4}$	7	1.064	.8892
$1\frac{3}{8}$	6	1.158	1.0532
$1\frac{1}{2}$	6	1.283	1.2928
$1\frac{5}{8}$	$5\frac{1}{2}$	1.389	1.5153
$1\frac{3}{4}$	5	1.490	1.7437
$1\frac{7}{8}$	5	1.615	2.0485
2	$4\frac{1}{2}$	1.711	2.2993
$2\frac{1}{4}$	$4\frac{1}{2}$	1.961	3.0203
$2\frac{1}{2}$	4	2.175	3.7154
$2\frac{3}{4}$	4	2.425	4.6186
3	$3\frac{1}{2}$	2.629	5.4284
$3\frac{1}{4}$	$3\frac{1}{2}$	2.879	6.5099
$3\frac{1}{2}$	$3\frac{1}{4}$	3.100	7.5477
$3\frac{3}{4}$	3	3.317	8.6414
4	3	3.567	9.9930
$4\frac{1}{4}$	$2\frac{7}{8}$	3.798	11.3292
$4\frac{1}{2}$	$2\frac{3}{4}$	4.027	12.7366
$4\frac{3}{4}$	$2\frac{5}{8}$	4.255	14.2197
5	$2\frac{1}{2}$	4.480	15.7633
$5\frac{1}{4}$	$2\frac{1}{2}$	4.730	17.5717
$5\frac{1}{2}$	$2\frac{3}{8}$	4.953	19.2676
$5\frac{3}{4}$	$2\frac{3}{8}$	5.203	21.2617
6	$2\frac{1}{4}$	5.423	23.0978

1927. The Square Thread.—In Fig. 597 is shown a screw with a **square thread,** and in Fig. 598 an enlarged section of the thread. As the name implies, the section of the thread is a square, each side of which is one-half the pitch.

The pitch of the square thread is usually taken *double* that of the triangular thread

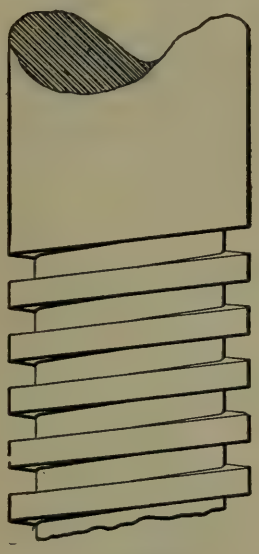

FIG. 597.

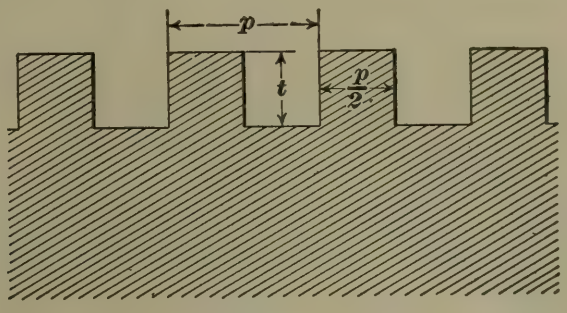

FIG. 598.

for the same diameter of bolt; for example, the pitch of a square thread on a 2-inch bolt or rod is $\frac{1}{2}$ inch. Approximately, the pitch is $\frac{1}{5}$ the diameter of the screw; that is,

$$p = \frac{d}{5} = \frac{d_1}{4}. \qquad \textbf{(212.)}$$

$$\text{Hence, } d_1 = \frac{4}{5}\, d. \qquad \textbf{(213.)}$$

$$\text{Also, } t = \frac{p}{2} = \frac{d}{10} = \frac{d_1}{8}. \qquad \textbf{(214.)}$$

The edges of the threads should be very slightly rounded off so as to prevent them from being accidentally flattened, which would cause a nut to bind upon the thread of the screw. When this rounding off is carried far enough, the thread takes the form shown in Fig. 599. This thread is especially adapted to withstand rough usage.

1928. The modification of the square thread, shown in Fig. 600, is frequently used for the lead screws of lathes. The section of the thread, instead of being square, tapers slightly from root to point. This taper is given not only because a thread of this form is much easier to cut than the

square thread, but because it enables the nut, which is made

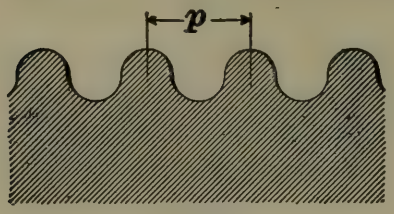

FIG. 599.

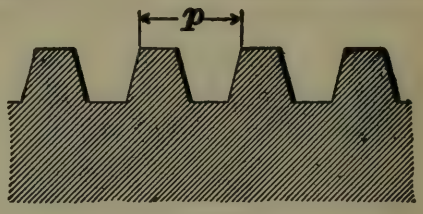

FIG. 600.

in two parts, to readily engage or disengage with the screw.

1929. The **trapezoidal screw thread** is shown in Fig. 601. One face of the thread is perpendicular to the axis of the screw, and the other is inclined at an angle of 45°. From the construction of the figure it is evident that $t = p$, the pitch. To form the actual thread an amount equal to $\frac{1}{8}\,t$ is cut off from top and bottom of the triangle; hence, the real depth t_1 is $\frac{3}{4}\,t$.

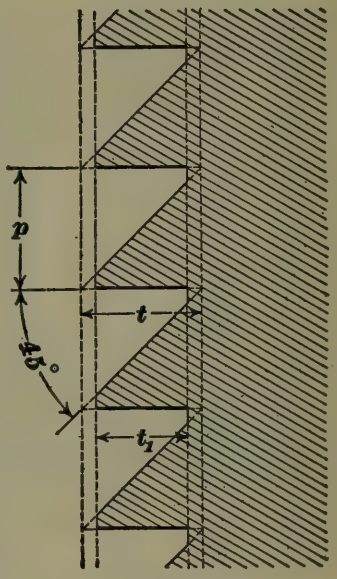

FIG 601.

When this thread is used, it is generally for communicating motion, or where great resistance without any bursting tendency is required. The usual dimensions are given by the following formulas, in which the letters have the same meaning as before:

$$p = \frac{2\,d}{15} = \frac{d_1}{6}. \qquad \textbf{(215.)}$$

$$t_1 = \frac{d}{10} = \frac{d_1}{8}. \qquad \textbf{(216.)}$$

For example, supposing the diameter of the screw to be $1\frac{1}{2}$ inches, the pitch of a trapezoidal thread is $p = \frac{2\,d}{15} = \frac{2 \times 1\frac{1}{2}}{15} = \frac{1}{5}''$; the number of threads per inch is $\frac{1}{p} = \frac{1}{\frac{1}{5}} = 5$, and the depth of the thread is $t_1 = \frac{d}{10} = \frac{1\frac{1}{2}}{10} = .15''$.

1930. The relative advantages of the various forms of screw threads may be shown by a consideration of the

forces acting on the thread. Usually the load on a bolt or screw acts in the direction of its axis; that is, a bolt used as a fastening is in tension, while a screw used to produce pressure is in compression. In either case the load is carried by the reaction between the surface of the thread of the screw and the surface of the thread in the nut. Suppose, in Fig. 602, the load to be upon the side $m\ l$ of the thread, and let the reaction of the thread at the point A be represented by R, which must, of course, be perpendicular to $m\ l$. This reaction R may be resolved into two forces, one, P, parallel to the axis of the bolt, and the other, Q, perpendicular to the axis. Then, P represents the portion of the load carried by the surface A of the screw, while the force Q tends to burst the nut. Now, for a given load the force P will remain the same whatever the angle of the thread may be. On the other hand, the forces Q and R will increase as the angle $m\ l\ n$ decreases. The friction between two surfaces is proportional to the perpendicular pressure between them. Consequently, *the greater the angle of a screw thread, the greater is the friction between the bolt and nut, and also the greater is the force tending to burst the nut.*

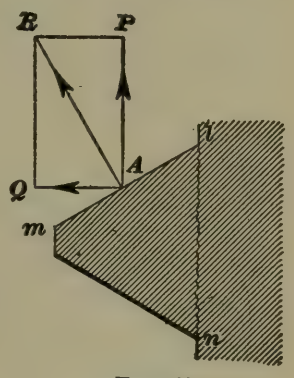

FIG. 602.

In the case of the square thread, the angle between the sides is zero, and hence there is no force tending to burst the nut. The reaction R becomes equal to the load P; therefore, the friction of a square thread is less than that of a triangular thread. On the other hand, the triangular thread is nearly twice as strong as a square thread. Thus, in Fig. 602, the shearing surface of a single triangular thread is $\pi d_1 \times$ distance $n\ l$, or $\pi d_1 p$, nearly, while it will be seen by referring to Fig. 598 that the shearing surface of a single square thread is $\pi d_1 \times \frac{1}{2} p = \frac{\pi d_1 p}{2}$.

It follows, therefore, that the triangular thread is better for fastenings, and the square thread for transmitting motion.

The trapezoidal thread combines the good features of both the triangular and the square threads. It has the same shearing section as the former, and the same friction as the latter. In this care must be taken, however, to use the screw so that the pressure comes on the flat side of the thread, for if it is put upon the inclined side the friction and bursting force on the nut are both greater than for a 60° triangular thread. The trapezoidal thread is used in the breech mechanism of large guns.

In England the **Whitworth system** of triangular threads is in use. The angle of the Whitworth thread is 55° and the point is rounded instead of being cut flat.

1931. Multiple-Threaded Screws.—It is plain that a nut will advance a distance equal to the pitch of the thread for each revolution of the screw. When a screw is used to transmit motion, it is often desirable to have the nut advance a considerable distance for one revolution, and this may necessitate a pitch altogether too large for the diameter of the screw. This difficulty is obviated by cutting two or more parallel threads, each having the same pitch.

These screws are termed **multiple-threaded** screws; when the screw has two threads, it is called a **double-threaded** screw; when it has three threads, a **triple-threaded** screw, and when it has four threads, a **quadruple-threaded** screw.

In Fig. 603 is shown a single square-threaded screw, and in Fig. 604 a double square-threaded screw, both screws having the same diameter and pitch. It is apparent that the root diameter of the double-threaded screw is much larger than that of the single-threaded one; it is, consequently, stronger, and is, therefore, to be pre-

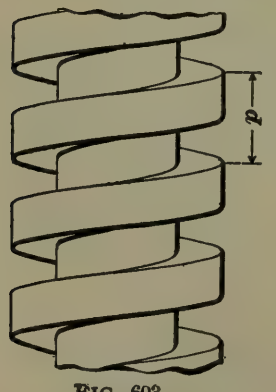

FIG. 603.

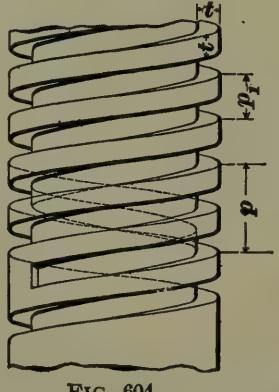

FIG. 604.

ferred. The distance (p_1, Fig. 604) between *two consecutive threads* of a multiple-threaded screw is equal to the pitch p, divided by the number of threads (2, 3, or 4, according to whether the screw is double, triple, or quadruple-threaded), and is called the **divided pitch** of the thread.

The dimensions of the thread are based upon this divided pitch; that is, $t = \frac{p_1}{2}$. Besides being stronger for the same pitch than the single thread, the multiple thread has the advantage of having a greater wearing surface than the single thread.

1932. Gas-Pipe Threads.—The rules for the pitches and depth of screw threads do not apply to gas-pipe threads, since the calculated depth of the thread would in that case be greater than the thickness of the pipe.

The following table gives the standard dimensions of steam, gas, and water pipes:

TABLE 44.

Nominal Diameter in Inches.	Thickness in Inches.	Actual Internal Diameter in Inches.	Actual External Diameter in Inches.	Threads per Inch. *n.*	Pitch of Threads.
$\frac{1}{8}$	.068	.270	.405	27	.037
$\frac{1}{4}$	.088	.364	.540	18	.056
$\frac{3}{8}$	.091	.494	.675	18	.056
$\frac{1}{2}$	.109	.623	.840	14	.071
$\frac{3}{4}$	.113	.824	1.050	14	.071
1	.134	1.048	1.315	$11\frac{1}{2}$	.087
$1\frac{1}{4}$	.140	1.380	1.660	$11\frac{1}{2}$	.087
$1\frac{1}{2}$	.145	1.611	1.900	$11\frac{1}{2}$	.087
2	.154	2.067	2.375	$11\frac{1}{2}$	.087
$2\frac{1}{2}$	.204	2.468	2.875	8	.125
3	.217	3.061	3.500	8	.125
$3\frac{1}{2}$	.226	3.548	4.000	8	.125
4	.237	4.026	4.500	8	.125
$4\frac{1}{2}$	.247	4.508	5.000	8	.125
5	.259	5.045	5.563	8	.125
6	.280	6.065	6.625	8	.125
7	.301	7.023	7.625	8	.125
8	.322	7.982	8.625	8	.125
9	.344	9.001	9.688	8	.125
10	.366	10.019	10.750	8	.125

1933. Threads may be right-handed or left-handed. To determine whether a screw is right or left-handed, hold it so that its axis will be horizontal; if the slope of the thread (from top to bottom) is from left to right, it is right-handed; otherwise the thread is left-handed. For nuts the above rule should be reversed. The threads of screws for general use are right-handed, and are so shown in the previous figures. Screws having left-handed threads are made only for special purposes.

STRENGTH OF SCREW BOLTS.

1934. Usually the stress on a bolt acts in the direction of its axis; that is, the bolt is in tension.

Let W = load on bolt in pounds;
S_t = *safe* working stress in pounds per square inch;
a = area of cross-section of bolt at root of thread;
d = nominal (outside) diameter of bolt in inches;
d_1 = diameter at root of thread in inches.

Then, if the bolt is in tension,

$$W = a S_t; \text{ or, } a = \frac{W}{S_t}. \qquad \textbf{(217.)}$$

The value of the nominal diameter d (corresponding to the value of a) obtained from formula **211** may be found from Table 43.

1935. For bolts subjected to a constant tension, S_t may be 8,000 lb. per sq. in. More often the tension varies between zero and its maximum value; in this case S_t may be taken as 6,000 lb. per sq. in. For cylinder-head bolts, and, in general, for bolts used to make a steam-tight joint, S_t may vary from 3,000 lb. for small cylinders to 6,000 for very large ones. Ordinarily S_t may be taken as 4,000 or 4,500 lb. per sq. in. All the above values are for wrought-iron bolts.

EXAMPLE.—Find the diameter of a wrought-iron bolt which is to sustain a steady load of $4\frac{1}{2}$ tons.

SOLUTION.—From formula **217**,

$$a = \frac{W}{S_t} = \frac{4\frac{1}{2} \times 2{,}000}{8{,}000} = 1.125 \text{ sq. in.}$$

From Table 43, the value of d lies between $1\frac{3}{8}''$ and $1\frac{1}{2}''$. The latter value should be taken. Ans.

1936. For screws transmitting motion, the following formula may be used:

$$W = 3{,}000\, d_1^2 = 1{,}920\, d^2 \text{ (since } d_1 = \tfrac{4}{5} d\text{)},$$
$$\text{or } d_1 = .0183\sqrt{W}, \quad d = .0228\sqrt{W} \qquad \textbf{(218.)}$$

For screws of this character, the least number of threads in the nut that are necessary to prevent excessive wear is given by the following formula, in which n_1 = the number of threads in the nut:

$$n_1 = \frac{W}{300\, d_1^{\,2}} = .0052 \frac{W}{d^2}. \qquad \textbf{(219.)}$$

The above formula applies to square and trapezoidal threads, and is based upon the assumption that the pressure on the thread per square inch of projected area should not be greater than 700 lb. per sq. in.

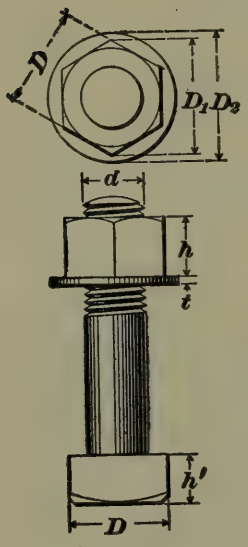

FIG. 605.

EXAMPLE.—A square-threaded screw 1½ inches in diameter transmits motion to a load of 4,000 pounds. What is the least allowable number of threads in the nut?

SOLUTION.—

$$n_1 = .0052 \frac{W}{d^2} = \frac{.0052 \times 4{,}000}{(1\frac{1}{2})^2} = 9\tfrac{1}{4}. \quad \text{Ans.}$$

PROPORTIONS OF BOLTS AND NUTS.

1937. The dimensions of the nut and bolt head are made to depend upon the diameter of the bolt. The standard form of bolt and nut is shown in Fig. 605. The bolt has a square head and hexagonal nut with washer. The washer is used to give a smooth seat for the nut to be screwed up against.

The following proportions are usually adopted;

Diameter of nut or head across flats,

$$\left.\begin{aligned} D &= 1\tfrac{1}{2}\, d + \tfrac{1}{8}'' \text{ for rough work.} \\ D &= 1\tfrac{1}{2}\, d + \tfrac{1}{16}'' \text{ for finished work.} \end{aligned}\right\} \qquad \textbf{(220.)}$$

Height of nut,

$$\left.\begin{aligned} h &= d \text{ for rough work.} \\ h &= d - \tfrac{1}{16}'' \text{ for finished work.} \end{aligned}\right\} \qquad \textbf{(221.)}$$

Thickness of washer, $t = .15\, d$. **(222.)**

Diameter of washer, $D_2 = 1\frac{1}{8}\, D_1$. **(223.)**

The above proportions for diameters D hold for both hexagonal and square nuts. The diameter across corners D_1 may be found from the geometry of the figure. Thus, for hexagonal nuts,

$$D_1 = \frac{D}{\cos 30^\circ} = \frac{D}{.866} = \left\{ \begin{array}{l} 1.73d + .14'' \text{ for rough nuts.} \\ 1.73d + .07'' \text{ for finished nuts.} \end{array} \right\} \quad \textbf{(224.)}$$

For square nuts,

$$D_1 = \frac{D}{\cos 45^\circ} = D\sqrt{2} = \left\{ \begin{array}{l} 2.12d + .18'' \text{ for rough nuts.} \\ 2.12d + .09'' \text{ for finished nuts.} \end{array} \right\} \quad \textbf{(225.)}$$

Height of head,

$$\left. \begin{array}{l} h' = \frac{3}{4}d + \frac{1}{16}'' \text{ for rough bolts.} \\ h' = d - \frac{1}{16}'' \text{ for finished bolts.} \end{array} \right\} \quad \textbf{(226.)}$$

EXAMPLE.—Required, the various dimensions of a finished bolt and hexagonal nut, the bolt being $1\frac{1}{2}$ inches in diameter.

SOLUTION.—Diameter of nut across flats $= D = 1\frac{1}{2}\,d + \frac{1}{16} = 1\frac{1}{2} \times 1\frac{1}{2} + \frac{1}{16} = 2\frac{5}{16}$ in.

Diameter of nut across corners $= D_1 = \frac{D}{.866} = \frac{2.3125}{.866} = 2\frac{11}{16}$ in., nearly. Ans.

Side of square bolt head $= D = 2\frac{5}{16}$ in. Ans.

Height of nut $= h = d - \frac{1}{16} = 1\frac{1}{2} - \frac{1}{16} = 1\frac{7}{16}$ in. Ans.

Height of bolt head $= h' = d - \frac{1}{16} = 1\frac{1}{2} - \frac{1}{16} = 1\frac{7}{16}$ in. Ans.

Diameter of washer $= D_2 = 1\frac{1}{8}\,D_1 = 1\frac{1}{8} \times 2\frac{11}{16} = 3$ in., nearly. Ans.

Thickness of washer $= t = .15\,d = .15 \times 1\frac{1}{2} = \frac{1}{4}$ in., nearly. Ans.

WRENCHES.

1938. The usual forms of solid wrenches are shown in

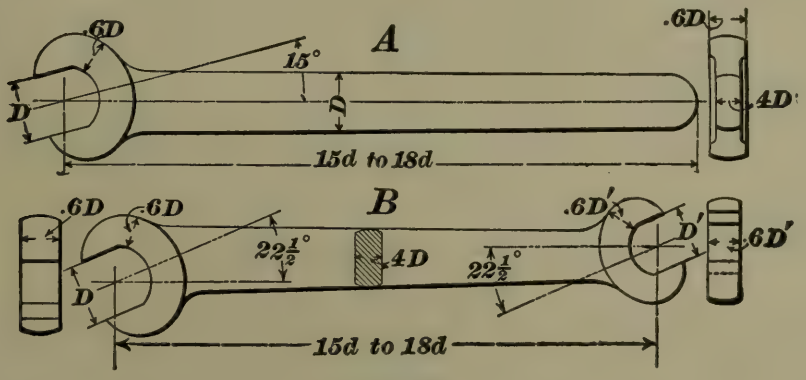

FIG. 606.

Fig. 606, in which that shown at A is used for hexagonal nuts, and that at B for square nuts. The length may be

from 15 to 18 times the diameter of the bolt for which it is to be used. In the figures d represents the diameter of the bolt. The other proportions are given in terms of the diameter across the flats of the nut as shown in the figure.

FORMS OF BOLT HEADS.

1939. The ordinary square bolt head has been shown in Fig. 605. Other forms are shown in Figs. 607 to 615. In Fig. 607, the hexagonal bolt head is similar to a hexagonal nut, and has the same dimensions except that the height h' may be less. Usually $h' = \frac{2}{3}\,d$ to d.

Fig. 608 shows a hexagonal head with a collar or flange, which is added to give an increased bearing surface. A

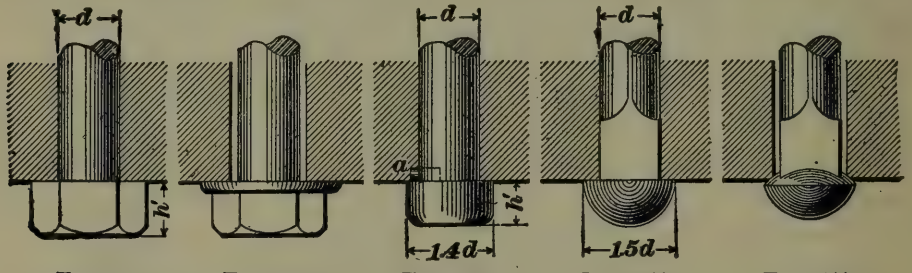

FIG. 607. FIG. 608. FIG. 609. FIG. 610. FIG. 611.

cylindrical head is shown by Fig. 609, and a hemispherical head by Fig. 610. The height h' of the former may be from $.5d$ to $.8d$; that of the latter is $\frac{3}{4}d$. The diameter of these heads is as shown by the figures. Fig. 611 shows a bolt head with a hemispherical bearing surface resting on a seat of the same shape. This bolt may lean to one side while the head will still remain in contact with its seat all the way round.

An eye-bolt is shown in Fig. 612. The cross-section of the eye through the hole should equal or exceed the area of the bolt.

That is, referring to this figure, $2\ a\ b = \frac{1}{4}\ \pi\ d^2$ or

$$a\ b = .39 d^2.$$

In good practice $a\ b$ is at least equal to $\frac{1}{2}d^2$. To calculate the diameter d_1 of the pin passing through the eye, we observe that the pin is in double shear, the shearing surface being twice the area of it; or $2\left(\frac{\pi\, d_1^{\,2}}{4}\right) = \frac{1}{2}\pi\, d_1^{\,2}$.

The strength of this pin in shear should equal the strength of the eye-bolt in tension; therefore, letting S_s represent

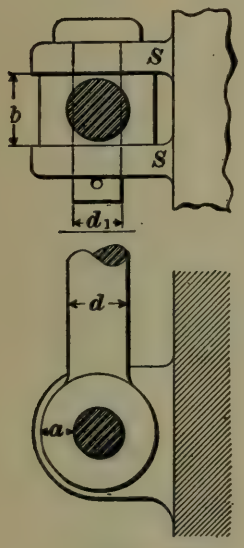

FIG. 612.

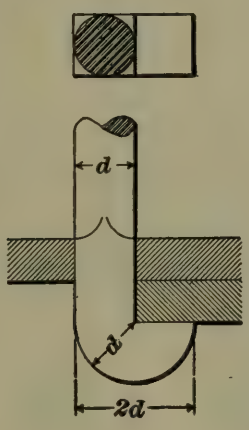

FIG. 613.

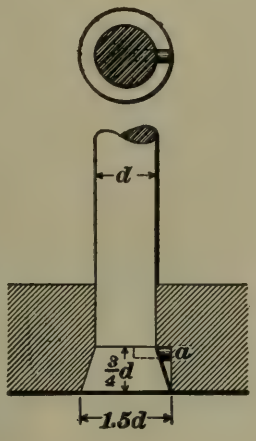

FIG. 614.

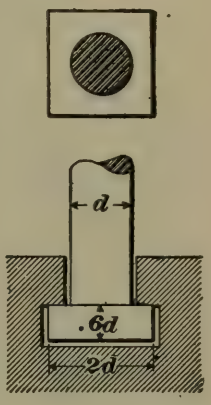

FIG. 615.

the *safe* shearing stress per square inch, and S_t the *safe* tensile strength, we have

$$\tfrac{1}{2}\pi d_1^2 S_s = \tfrac{1}{4}\pi d^2 S_t,$$

$$\text{or } d_1 = d\sqrt{\frac{S_t}{2S_s}}.$$

But the ratio $\frac{S_t}{S_s}$ is usually about 1.25;

hence, $$d_1 = d\sqrt{.625} = .8\,d, \text{ nearly.} \qquad \textbf{(227.)}$$

If, however, the pin is overhung; that is, if there is but one of the nibs S, S, instead of two, as shown in Fig. 612, it will be in a single shear, and

$$d' = d\sqrt{\frac{S_t}{S_s}} = 1.1\,d, \text{ nearly.} \qquad \textbf{(228.)}$$

Fig. 613 shows the head of a **hook bolt.** This form of bolt is used when it is undesirable to weaken one of the connected pieces by a bolt hole. The proportions are shown in the figure. The **countersunk head** is shown by Fig. 614, and the **T head** by Fig. 615.

1940. The ordinary method of *attaching a bolt to stonework* is shown in Fig. 616. The head is long and rectangular, and is made *jagged* with a cold chisel; the hole is made

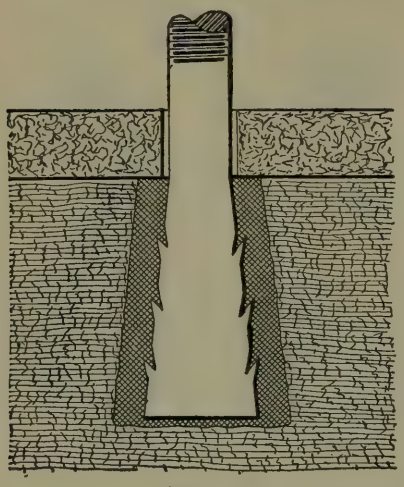

FIG. 616.

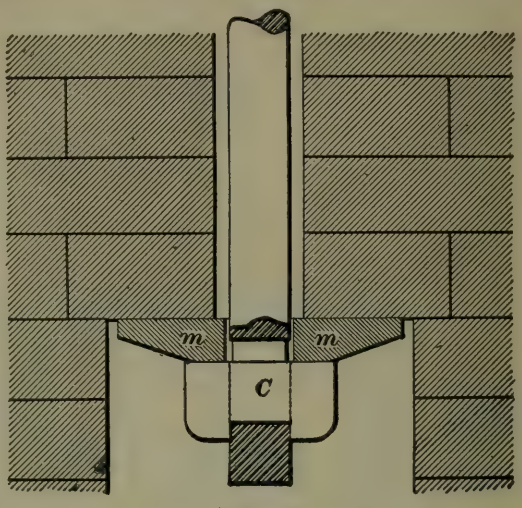

FIG. 617.

larger at the bottom than at the mouth. The bolt head is placed in the hole and the remaining space is then filled with melted lead or sulphur.

1941. The ordinary method of fixing the **foundation bolts** which fasten an engine bed to its foundation is shown in Fig. 617. These foundation bolts have no solid heads, but are long rods threaded on one end for a nut, and have a slot in the other end through which passes a **cotter** *C*, which rests against a cast-iron or wrought-iron washer *m*. This washer and cotter form the head of the bolt.

The bolt head is within a recess formed in the foundation, so arranged as to be accessible. The area of the washer bearing against the foundation, multiplied by the safe compressive strength of the material of the foundation, should be equal to the tension carried by the bolt. For example, the tensile strength of wrought iron is about 20 times the compressive strength of brick. Hence, the bearing area of a washer resting against a brick foundation should be 20 times the cross-section of the bolt.

1942. Various devices are used to prevent a bolt from *turning* while the nut is being screwed up. A common

method is to make the neck of the bolt next to the head **square,** as shown in Figs. 610, 611, and 613. The *bolt hole* is also made square. Another way is to insert a *pin a* into the neck, close to the head, as shown in Figs. 609 and 614. The projecting part of the pin fits into a recess cut out to receive it.

FORMS OF NUTS.

1943. The *common hexagonal nut* has been shown in Fig. 605. Ordinarily, both hexagonal and square bolt heads and nuts are *chamfered off* at an angle of 30° or 40°. Other forms of nuts are shown in Figs. 618 to 622. The **flanged**

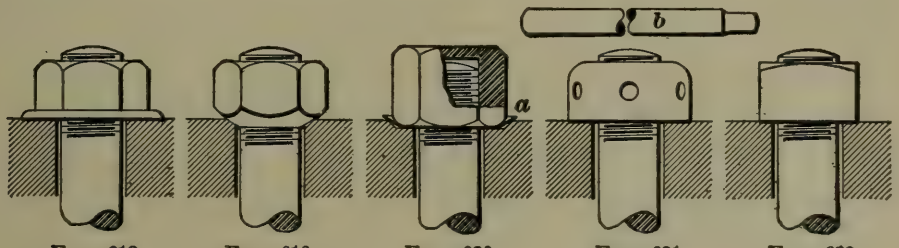

FIG. 618. FIG. 619. FIG. 620. FIG. 621. FIG. 622.

nut, Fig. 618, is useful when the bolt hole is larger than the bolt, as it covers the hole and gives a greater bearing surface. Fig. 619 shows a nut with a **spherical bearing surface** and the seat shaped to correspond. This nut will bear upon the seat all around, whether the bolt be perpendicular or inclined to the seat. A **cap nut** is shown in Fig. 620. This form of nut is used to prevent the leakage of a fluid past the screw threads. To prevent leakage past the seat, the nut is screwed down on a soft, thin copper washer *a*. Fig. 621 shows a **round nut,** and Fig. 622 an ordinary **square nut.** The round nut is provided with holes in its circumference, as shown, and is screwed up by inserting a bar *b* in one of the holes.

LOCKING NUTS.

1944. All nuts are slightly loose on their bolts, a small clearance being necessary to permit them to turn freely. When a nut is subject to vibration it is liable to slack back and

allow the bolt to become loose. To prevent this slacking back, various locking arrangements have been devised. A common device is the **locknut,** or **jam nut,** shown in Fig. 623. Two nuts are used, one of which is about half as thick as the ordinary nut. The load is thrown on the outer nut, which should, therefore, be the thicker one. In practice it is common to place the thin one on the outside, because the wrench is generally too thick to act on it when placed below the other. The jam nut is not always satisfactory as a method of locking.

1945. The nut may be effectively locked to the bolt by the use of a set-screw, as shown in Fig. 624. To prevent the point of the set-screw from injuring the thread, a piece of iron or steel *m* may be let into the nut. The piece is screwed along with the nut, and acts as a shield interposed between the set-screw and thread.

1946. A good method of locking a nut is shown in Fig. 625. The lower portion of the nut is turned down, and

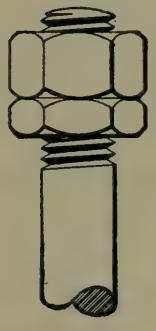

FIG. 623.

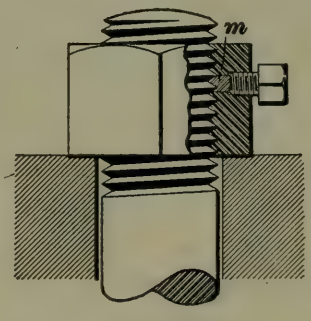

FIG. 624.

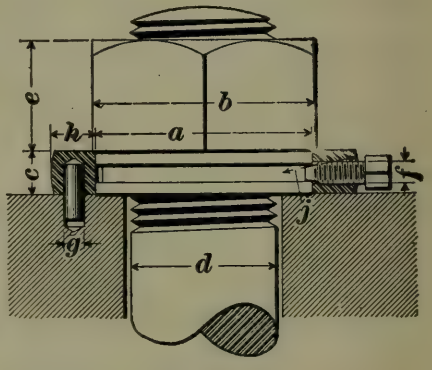

FIG. 625.

a groove is cut in the center of the circular portion. A collar is fastened by means of a pin to one of the pieces to be connected, and the circular part of the nut is fitted into this collar. The nut is then bound to the collar by a set-screw passing through the latter, the point of the set-screw engaging into the groove turned in the nut. The following proportions have proved very satisfactory, in which *d*, the diameter of the bolt, is taken as a unit. All dimensions are in inches:

$$\left.\begin{array}{ll} a = 1\frac{1}{2}d - \frac{1}{16}''; & f = \frac{1}{8}d + \frac{1}{8}''; \\ b = 1\frac{1}{2}d + \frac{1}{8}''; & g = \frac{1}{8}d + \frac{1}{16}''; \\ c = \frac{1}{4}d + \frac{1}{4}''; & h = \frac{1}{4}d + \frac{1}{4}''; \\ e = \frac{3}{4}d. & \end{array}\right\} \quad (229.)$$

1947. Fig. 626 shows a device for locking a nut by means of a **stop plate.** The plate is fastened to one of the pieces through which the bolt passes.

It is so shaped that the bolt may be locked at intervals of $\frac{1}{12}$ of a revolution. Suitable proportions for this stop plate are shown in the figure, in which d, the diameter of the bolt, is taken for the unit, except the distance between the center of the bolt and screw for which D, the diameter between the parallel sides of the nut, is taken for the unit. All dimensions are in inches.

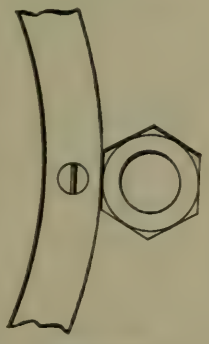

FIG. 627.

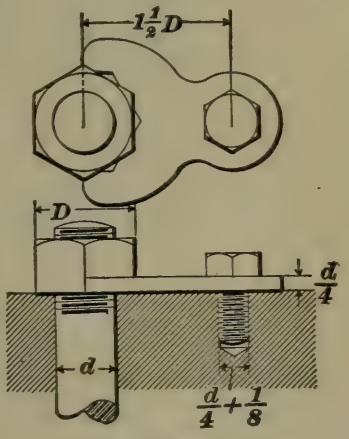

FIG. 626.

1948. In Fig. 627 is shown another form of *stop plate*, which may be conveniently used when the bolts are set in a circle, as, for example, on engine cylinder heads.

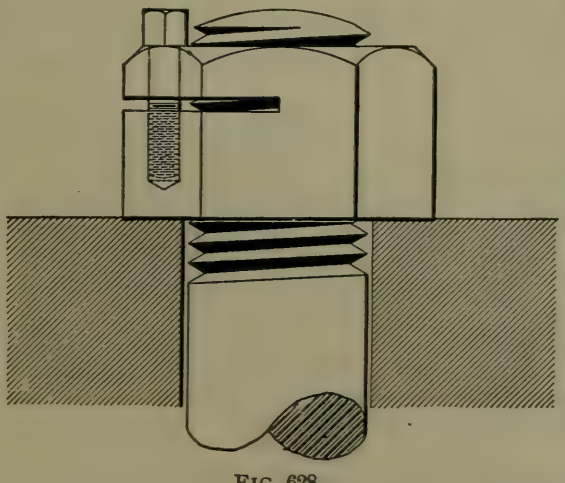

FIG. 628.

1949. In Fig. 628 is shown a different manner of locking the nut. In this the nut is sawed half way through, and the parts connected by a small screw. When the nut is screwed home the small screw is tightened, thereby greatly increasing the friction between the bolt and the nut.

1950. A convenient locking device is **Grover's spring washer,** shown in Fig. 629. The washer when not held

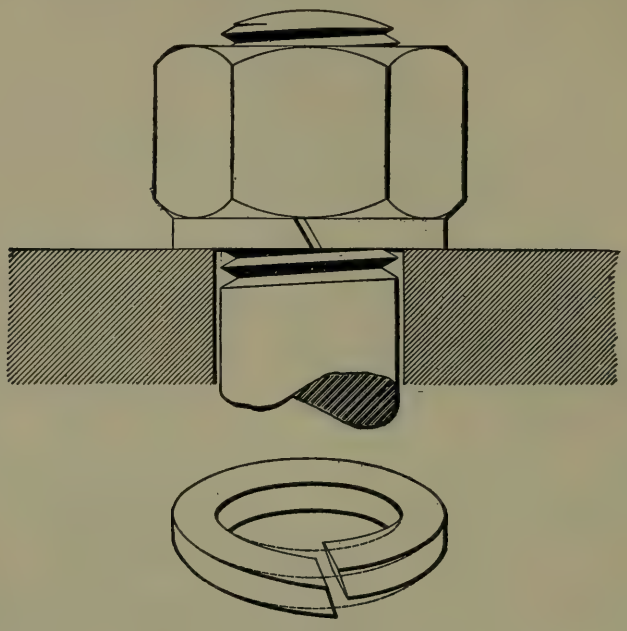

FIG. 629.

down by the nut has the form shown in the lower part of the figure; when the nut is screwed down tightly, the washer is flattened out and its elasticity keeps the nut tight on the bolt.

FORMS OF BOLTS AND SCREWS.

1951. Bolts.—A **stud bolt,** or **stud,** is shown in Fig. 630. Each end of the stud has a screw thread cut on it. One end screws into one of the pieces to be connected, the other carries a nut.

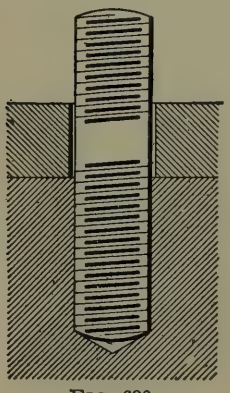

FIG. 630.

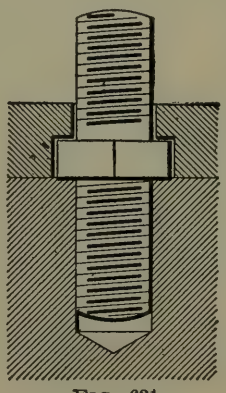

FIG. 631.

A stud having a **collar** is shown in Fig. 631. The collar may be square or round; it serves as a shoulder against which to screw up the stud, and, when square, is a convenient place to apply a wrench.

A **tap bolt,** shown in Fig. 632, is a bolt not requiring a nut. It is screwed directly

into one of the pieces to be connected, the head pressing upon the other piece.

Fig. 633 shows a tap bolt having a countersunk head. This style of bolt is called a **patch bolt,** and, as its name implies, it is used in making patches in boilers, etc. The diameter of the neck of the projection to which the wrench

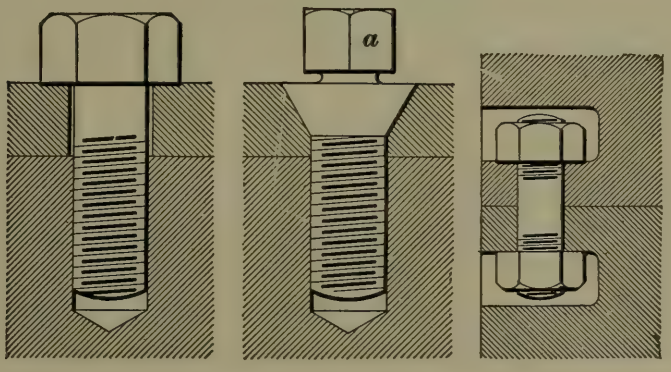

FIG. 632. FIG. 633. FIG. 634.

is applied is smaller than the root diameter of the bolt, so that the projection will break off instead of breaking the bolt when too much force is applied to it.

Fig. 634 shows a bolt having a nut at each end instead of a head and nut.

1952. Screws.—In Figs. 635, 636, and 637 are shown different forms of machine screws slotted for a screwdriver. Fig. 635 is called a **countersink head screw;** Fig. 636,

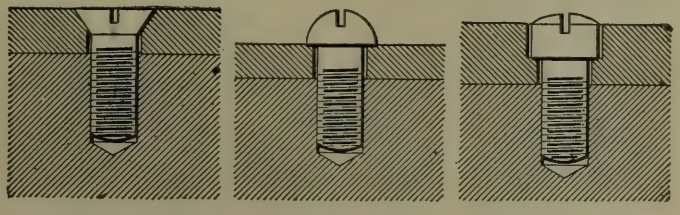

FIG. 635. FIG. 636. FIG. 637.

a **button head screw,** and Fig. 637, a **fillister head screw.** When the countersink head screw is used, the hole in the piece which is to be held tight is countersunk so that the head of the screw is flush as shown.

1953. Set-screws are screws or bolts which are used to press against a piece, and by friction to prevent it from

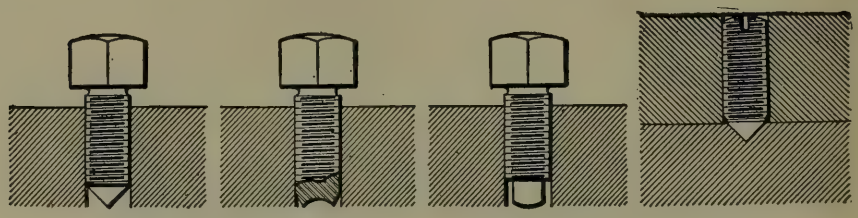

FIG. 638. FIG. 639. FIG. 640. FIG. 641.

moving or rotating relatively to another piece. For example, a set-screw may be screwed through the hub of a pulley, and by pressing against the shaft will prevent the pulley from turning on the shaft. Various forms of set-screws are shown in Figs. 638, 639, 640, and 641.

Fig. 638 is called a **cone-point set-screw**; Fig. 639, a **cupped set-screw**; Fig. 640, a **round pivot-point set-screw**, and Fig. 641, a **headless cone-point set-screw.**

1954. Bolts in Shear.—Usually bolts are in direct tension, but constructions occur in which a bolt may be placed in shear.

The strength of a bolt in shear is about $\frac{4}{5}$ that of a bolt in tension; that is, the shearing strength of wrought iron is about $\frac{4}{5}$ the tensile strength. Hence, the diameter of a bolt in single shear should be $\sqrt{\frac{5}{4}} = 1.1$ that of a bolt in tension under the same load; and the diameter of a bolt in double shear should be $\sqrt{\frac{5}{4 \times 2}} = .8$ that of a bolt in tension under the same load.

1955. Knuckle Joint.—The knuckle joint, Fig. 642, is an example of a bolt in shear. Since the bolt is in double shear, it need be theoretically only .8 the diameter of the rod. The bolt wears, however, and since it should at no time be less than .8 the diameter of the rod, the bolt and rod are made equal in diameter.

The other proportions are in terms of the diameter of the bolt. All dimensions are in inches.

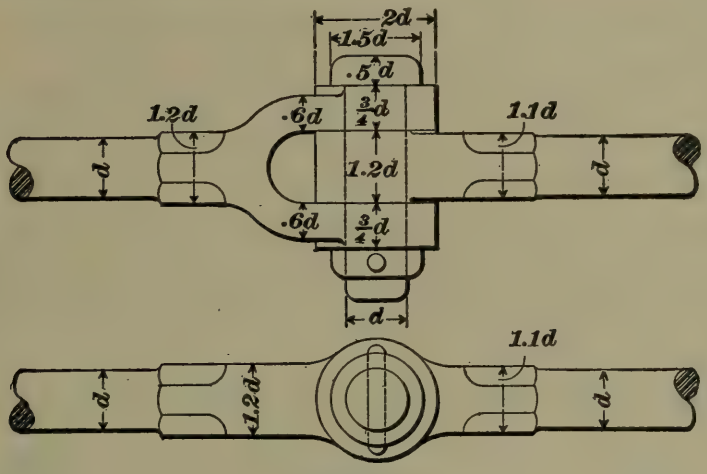

FIG. 642.

Other examples of bolts in shear may be seen in pin-connected iron bridges.

EXAMPLES FOR PRACTICE.

1. Calculate the diameter of a wrought-iron bolt which is to sustain a varying load of 2,300 pounds. Ans. $\frac{7}{8}$ in.

2. What steady load may be safely sustained by 5 bolts $1\frac{1}{8}''$ in diameter? Ans. 13.86 tons.

3. A screw with square threads transmits motion to a load of 1,500 pounds. Calculate the diameter of the screw, the number of threads per inch, and the necessary number of threads in the nut.

Ans. { Diameter = $\frac{7}{8}$ in.
Threads per inch = 6.
Threads in nut = 10.

KEYS.

1956. Keys are iron or steel wedges used to secure wheels, cranks, or pulleys to shafts. It is the duty of the key to prevent the relative rotation of the pieces connected; if, for example, the pieces in question are a pulley and shaft, the function of the key is to prevent the pulley from turning on the shaft. Generally, the key will also prevent a wheel or pulley from moving lengthwise along the shaft.

FORMS OF KEYS.

1957. The **concave key** is shown in Fig. 643. The key is hollowed out to fit the shaft, and holds by friction alone; hence, it is suitable only for light work.

Fig. 644 shows a shaft with a **flat key.** A flat surface is cut on the shaft to receive the key, which is, consequently, more effective than the concave key.

1958. The **sunk key,** Fig. 645, is much more effective than either of the above mentioned, since it is impossible for the pulley to slip on the shaft without shearing off the key.

A slot called the **key-way** is cut lengthwise in the shaft,

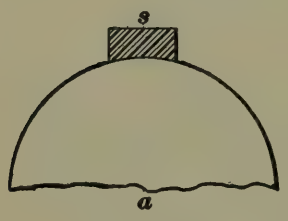

FIG. 643.

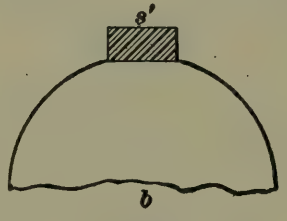

FIG. 644.

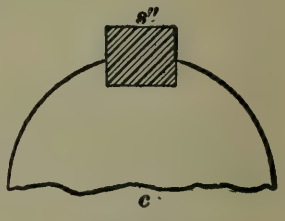

FIG. 645.

and another one is cut in the hub of the pulley. The key is accurately fitted and driven in.

Two kinds of sunk keys are in common use: 1. The

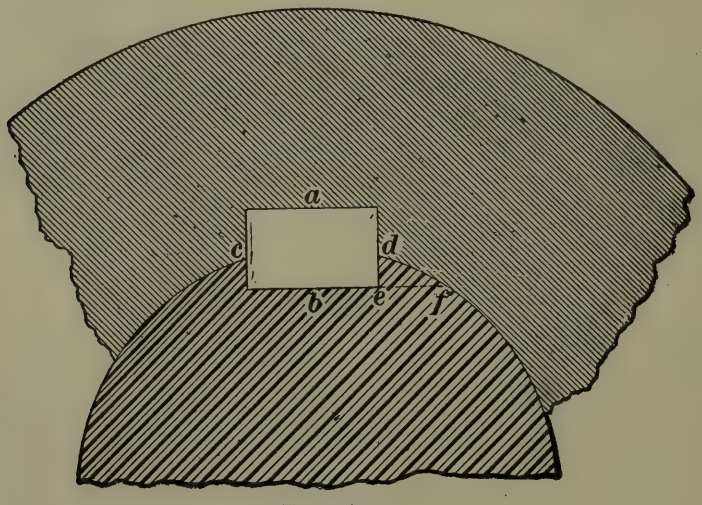

FIG. 646.

rectangular keys of the form shown in Fig. 646, which are used for fastening cranks, gear-wheels, etc. 2. Square keys,

Fig. 645, which are used on machine tools, and, in general, on work requiring accurate fitting.

The keys of the former class are driven in tightly and usually fit at the top and bottom as well as at the sides; they are unsuited for parts which require nice fitting, because they are liable to spring the parts out of true. The square key, on the other hand, does not fit tightly at the top and bottom, but rather at the sides.

1959. Large wheels or pulleys may be fastened to the shaft by using two, three, or four keys. Fig. 647 shows a method of keying a piece to a square shaft. When several keys are thus used the wheel or pulley may be centered on

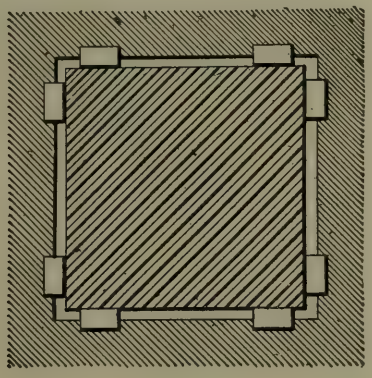

FIG. 647.

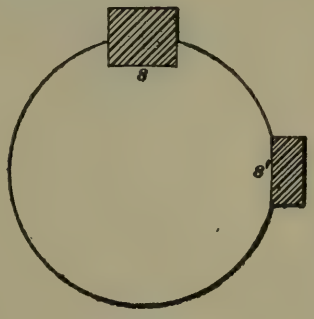

FIG. 648.

the shaft by means of the keys. If a pulley is accidentally bored a little too large for the shaft, it may be prevented from rocking by using both a sunk key and a flat key, as shown in Fig. 648.

The flat key is placed at a distance around the shaft of about 90° from the sunk key, and the pulley is thus made to bear on the shaft at three points.

When a key cannot be conveniently driven out from the small end, it is necessary to make it with a gib head a, as shown in Fig. 649. The head forms a shoulder to drive against.

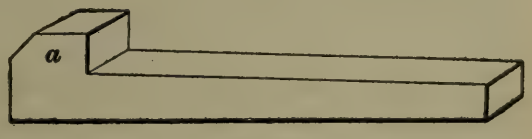

FIG. 649.

1960. Sliding, or **feather, keys** are used where it is desired to prevent a piece from rotating on a shaft, and, at the same time, allow it to slide lengthwise. The key is

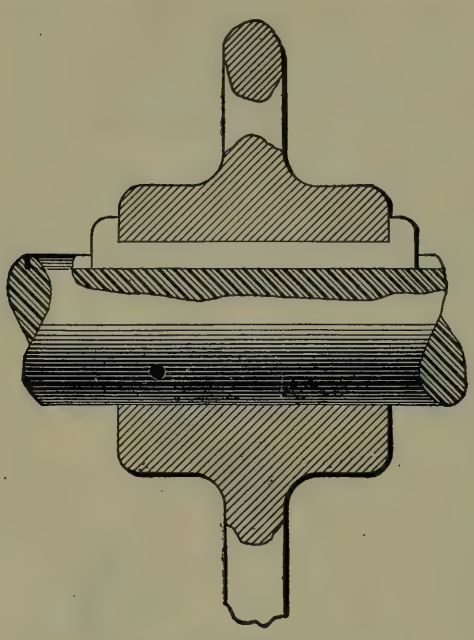

FIG. 650.

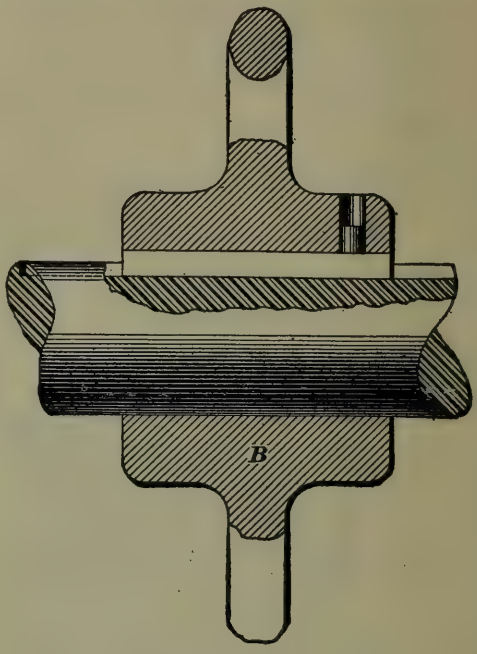

FIG. 651.

usually fastened to the piece, and is free to slide in the keyway of the shaft, though the operation is sometimes reversed, and the key is fastened to the shaft. Various methods of fixing the key to the wheel or pulley are shown in Figs. 650, 651, and 652. In Fig. 652, the key is dovetailed in section, and driven tightly into the hub *m*.

When the hub of a wheel in which there is a feather abuts against a collar or a bearing it is evident that the feather must not project, and in such a case the feather key, Fig. 652, or the flush feather key, Fig. 651, may be used; otherwise, the key may have gib heads, as shown in Fig. 650.

1961. Round, or **pin, keys** may be used when the piece is shrunk on to the shaft, as for example, a small crank, as shown in Fig. 653. A hole is drilled partly in the shaft and partly in the crank, and a round pin is driven in the hole, as shown in the figure.

1962. To facilitate the driving in and the removal of keys they are usually tapered. The taper varies from $\frac{1}{64}$ to $\frac{1}{100}$ or $\frac{1}{150}$, the smaller tapers being used on the most

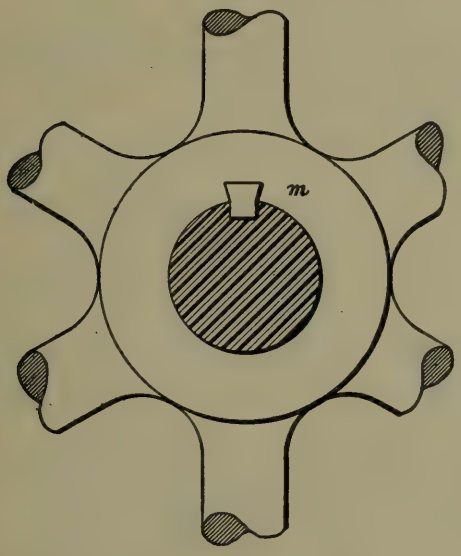

FIG. 652.

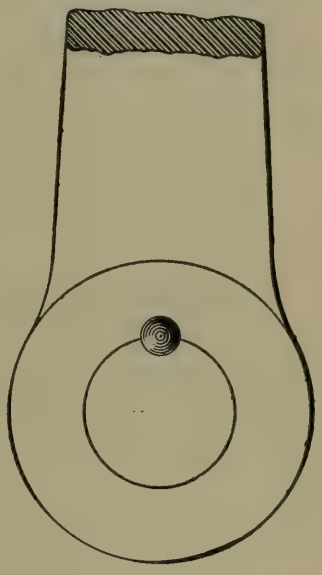

FIG. 653.

accurate work. By a taper of $\frac{1}{64}$ is meant that the decrease in thickness is $\frac{1}{64}$ the length of the key. Square keys and feather keys do not require a taper.

NOTE.—To prevent any misunderstanding, the word *taper*, when used in this subject, will mean the gradual diminution in size of a slender object. Thus, should it be stated that a certain conical piece has a taper of 2 inches per foot, it would be meant that were the conical piece one foot long the diameter at one end would be 2 inches larger than at the other.

STRENGTH AND PROPORTIONS OF KEYS.

1963. A sunk key is subjected to two kinds of stresses. The twisting of the piece on the shaft tends to shear the key, and also to crush it by compression.

Let b = width of key in inches;

t = thickness of key in inches;

l = length of key in inches;

S_s = *safe* shearing stress allowable in pounds per square inch;

S_c = *safe* crushing stress allowable in pounds per square inch;

P = force in pounds acting at rim of wheel or pulley;
R = radius of wheel or pulley in inches;
d = diameter of shaft in inches.

The shearing area of the key is $b\,l$; hence, the safe resistance of the key to shearing is $b\,l\,S_s$. Taking moments about the center of the shaft, we have

$$b\,l\,S_s \times \tfrac{1}{2}d = P \times R,$$

or

$$b\,l = \frac{2PR}{S_s\,d}. \quad (a)$$

Suppose the key to be half bedded in the shaft, the crushing area is $\frac{1}{2}\,t\,l$, the resistance to crushing $\frac{1}{2}\,t\,l\,S_c$. If the key is designed to be equally strong against shearing and crushing, the shearing resistance must equal the crushing resistance, or

$$b\,l\,S_s = \tfrac{1}{2}\,t\,l\,S_c,$$

or

$$b = \tfrac{1}{2}\,t\,\frac{S_c}{S_s}. \quad (b)$$

If now we assume the crushing strength of the material to be double the shearing strength, $\frac{S_c}{S_s} = 2$; and we obtain $b = t$. S_c is really not double S_s, but on account of the friction between the key and shaft, there is little danger of crushing, and a small factor of safety may be used. In any case, b is not to be less than t, and for practical reasons it is generally made greater.

For shearing, we may use a factor of safety of about 10, giving a safe shearing stress S_s of 5,000 lb. per sq. in. for wrought iron, and 7,000 lb. for steel. Then equation (a) above becomes

$$\left.\begin{aligned} b\,l &= \frac{PR}{2{,}500\,d} \text{ for wrought iron.} \\ b\,l &= \frac{PR}{3{,}500\,d} \text{ for steel.} \end{aligned}\right\} \quad \textbf{(230.)}$$

Instead of the twisting moment PR of formula **230,** it may be more convenient to use the horsepower transmitted by the shaft, and its number of revolutions.

Let N = number of revolutions per minute;
H = horsepower.

Then, a point on the circumference of the wheel or pulley moves $2\pi RN$ inches per minute, or $\frac{2\pi RN}{12}$ feet per minute.

Hence, if a force P constantly acts at the circumference of the wheel, the work done per minute is $\frac{2\pi RN}{12} \times P$ foot-pounds.

Therefore, $\frac{2\pi RNP}{12} \div 33{,}000 = H$, the horsepower.

$$\frac{12 \times 33{,}000 \times H}{2\pi N} = PR = 63{,}025\,\frac{H}{N}. \qquad \textbf{(231.)}$$

Formula **231** will be frequently used hereafter, and should be carefully studied.

Substituting the value of $P\ R$ from formula **231**, in formula **230**, we have

$$\left.\begin{aligned} bl &= \frac{25H}{dN} \text{ for wrought iron.} \\ bl &= \frac{18H}{dN} \text{ for steel.} \end{aligned}\right\} \qquad \textbf{(232.)}$$

Formulas **230** and **232** may be used in calculating the sizes of keys for large work. For small shafts the sizes given by **230** and **232** are much smaller than are used in actual practice.

1964. Designers usually adopt some standard ratio between the depth and width of the key, the ratio varying from $\frac{1}{2}$ to $\frac{5}{6}$. We shall adopt the ratio $\frac{2}{3}$; that is, $t = \frac{2}{3}\ b$.

EXAMPLE.—The maximum pressure on an engine crank-pin is 12,500 pounds, and the length of crank is 10 inches. Suppose the diameter of the shaft to be 5 inches, and the length of the key the same. What should be the dimensions of a wrought-iron key to hold the crank to the shaft? The crank is not to be shrunk on the shaft.

SOLUTION.—Using formula **230**,

$$b = \frac{PR}{2{,}500\,dl} = \frac{12{,}500 \times 10}{2{,}500 \times 5 \times 5} = 2''. \quad \text{Ans.}$$

$$t = \tfrac{2}{3}\,b = \tfrac{2}{3} \times 2 = 1\tfrac{1}{3}'', \text{ say } 1\tfrac{11}{32}''. \quad \text{Ans.}$$

1965. In common designing, the sizes of keys are determined by empirical formulas, which give an excess of strength. For an ordinary sunk key, the following proportions may be adopted:

$$\left.\begin{aligned} b &= \tfrac{1}{4}\,d. \\ t &= \tfrac{2}{3}\,b = \tfrac{1}{6}\,d. \end{aligned}\right\} \qquad \textbf{(233.)}$$

Using formula **233** in the example of the crank-shaft above,

$$b = \tfrac{1}{4}d = \tfrac{1}{4} \times 5 = 1\tfrac{1}{4}''.$$
$$t = \tfrac{1}{6}d = \tfrac{5}{6} = \tfrac{13}{16}'', \text{ nearly.}$$

The key is sunk for $\frac{1}{2}$ its depth in the shaft.

The following empirical formulas give good results:

$$\left.\begin{aligned} b &= \frac{d}{7} + \frac{1''}{4}. \\ t &= \frac{d}{12} + \frac{3''}{16}. \end{aligned}\right\} \text{ For driven pulleys.} \qquad \textbf{(234.)}$$

$$\left.\begin{aligned} b &= .2\,d + .16''. \\ t &= .1\,d + .16''. \end{aligned}\right\} \text{ For driving pulleys.} \qquad \textbf{(235.)}$$

When d is less than $1\frac{3}{16}$ in.,

$$\left.\begin{aligned} b &= \frac{d}{3}. \\ t &= \frac{d}{5}. \end{aligned}\right\} \qquad \textbf{(236.)}$$

Formulas **233** and **235** give nearly the same results; thus, for a $2\frac{1}{2}$-inch shaft, **233** gives $b = \frac{2\frac{1}{2}}{4} = \frac{5''}{8}$, and $t = \frac{3}{8}''$, nearly. **235** gives $b = .66$ in. $= \frac{11}{16}''$, and $t = .41'' = \frac{7}{16}''$. Unless otherwise stated, the student may use formula **233** in solving his problems.

For sliding feather keys, the following formulas give the proportions used in ordinary practice:

$$\left.\begin{aligned} b &= \frac{d}{8} + \frac{1''}{16}. \\ t &= \frac{3\,d}{16} + \frac{1''}{16}. \end{aligned}\right\} \qquad \textbf{(237.)}$$

1966. In some instances pulleys may be keyed to a large shaft and yet transmit a small amount of power. In such cases the dimensions of a key, if based upon the actual diameter of the shaft, would be much too large, and the proportions should be based upon the diameter of a shaft which would be necessary to transmit the power of the pulley in question, and no more. Letting H represent the horsepower transmitted by the pulley, and N represent the revolutions per minute of the shaft, we may take

$$d = 5\sqrt[3]{\frac{H}{N}}, \qquad (238.)$$

and use this value of d in formula **236.**

EXAMPLE.—A pulley transmitting 2 horsepower is keyed to a shaft 4 inches in diameter making 120 revolutions per minute. Determine the dimensions of the key.

SOLUTION.—The diameter of a shaft to transmit 2 horsepower is

$$d = 5\sqrt[3]{\frac{H}{N}} = 5\sqrt[3]{\frac{2}{120}} = 1.28''. \quad \text{Ans.}$$

From formula **236,**

$$b = \frac{d}{3} = \frac{1.28}{3} = \tfrac{7}{16}''. \quad \text{Ans.} \qquad t = \frac{d}{5} = \frac{1.28}{5} = \tfrac{1}{4}''. \quad \text{Ans.}$$

EXAMPLES FOR PRACTICE.

1. Calculate the dimensions of an ordinary sunk key for a shaft $3\frac{1}{2}$ inches in diameter. Ans. $\frac{9}{16}'' \times \frac{7}{8}''$.

2. Calculate the dimensions of a feather key for a shaft $2\frac{3}{4}$ inches in diameter. Ans. $\frac{13}{32}'' \times \frac{9}{16}''$.

3. A wrought-iron key is used to fasten a fly-wheel on a 6-inch shaft. If the maximum pressure on the crank-pin is 15,000 lb., and the crank radius is 16 inches, what should be the dimensions of the key, its length being 8 inches? Ans. $2'' \times 1\frac{11}{32}''$.

4. A pulley transmits $3\frac{1}{2}$ horsepower, and is keyed to a shaft 5 inches in diameter, making 150 revolutions per minute. Calculate the dimensions of the key. Ans. $\frac{1}{4}'' \times \frac{5}{16}''$.

COTTERS.

1967. A **cotter** is an iron or steel bar which is driven through one or both of two pieces to be connected, and holds them together by its resistance to shearing at two *transverse*

cross-sections. An example of a cotter was shown in Fig. 617. The cotter C passes through the foundation bolt, and is subjected to a shearing stress along the dotted lines.

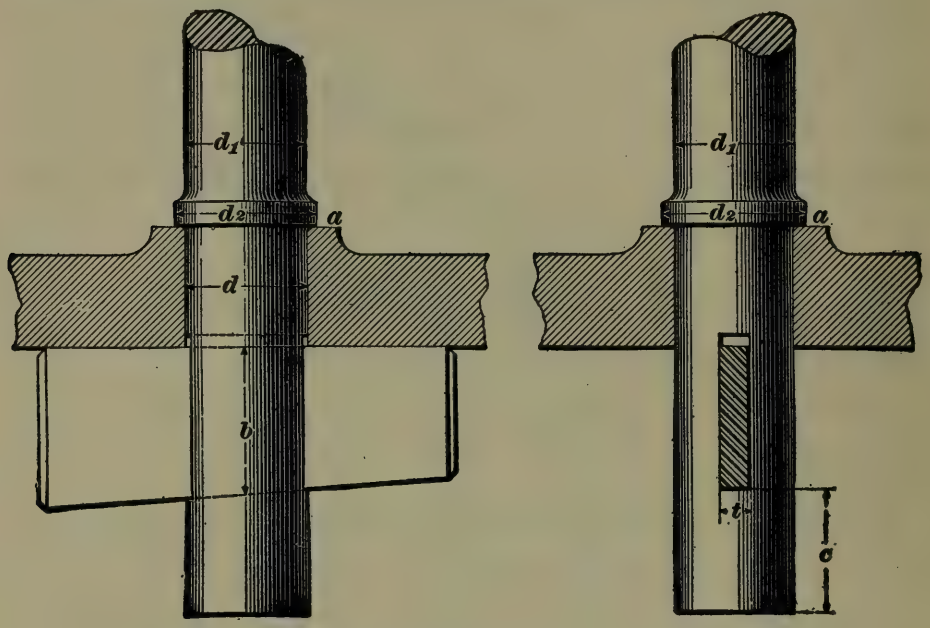

FIG. 654.

A simple form of a cotter is shown in Fig. 654. The cotter passes through the rod only, and acts when the rod is in tension. The enlargement, or collar a, on the rod prevents any downward movement, and, therefore, resists thrust.

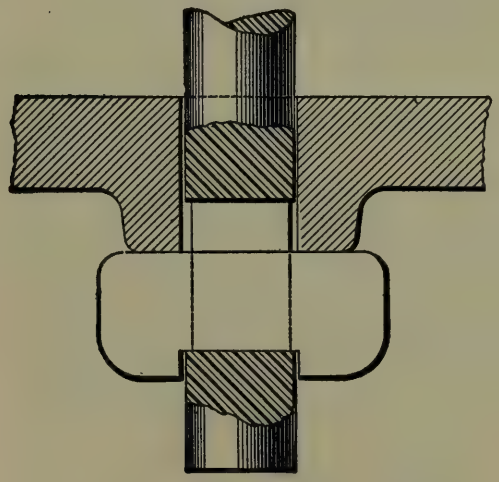

FIG. 655.

Fig. 655 shows a cotter with gib ends. Since in this case the rod is not provided with a collar, this arrangement will resist tension only. In the arrangement shown in Fig. 656, the cotter is divided into two parts, the one with hooked ends being called the **gib,** and the other the cotter.

In this construction the rod should be placed in tension only. If it is necessary to provide for thrust the end of the rod should be tapered as shown in Fig. 657.

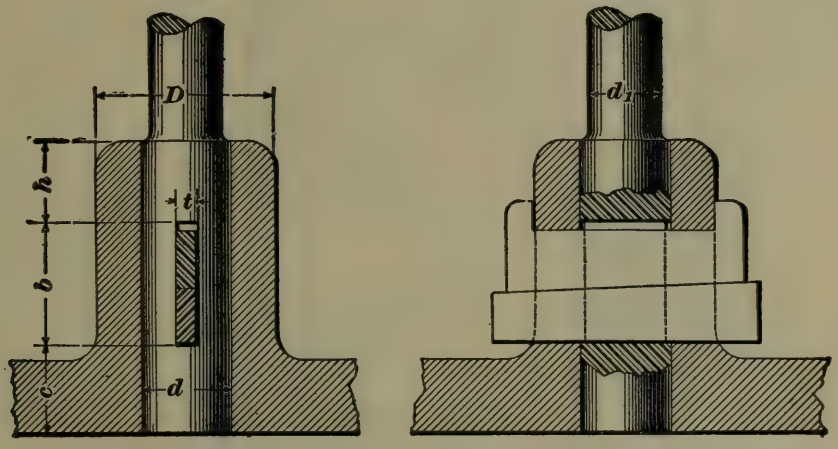

FIG. 656.

Fig. 658 shows an arrangement in which a rod is cottered into a socket. As shown in Figs. 656 and 658, the cotter is long and tapered; it serves, therefore, as a means of adjusting the length of the connected pieces. By driving the cotter farther in, the total length of the two pieces is lessened, and *vice versa*.

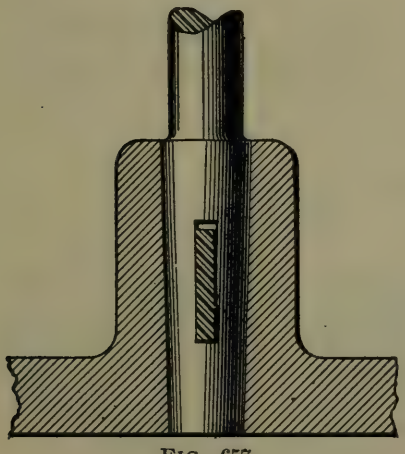

FIG. 657.

A cotter may be used to connect two straps *m* and *n* to a rod *l* shown in Fig. 659. When driven down the friction between the cotter and lower strap must cause the latter to open out as shown by the dotted lines. Hence, it is desirable in such a case to use a cotter combined with a gib, as shown in Fig. 660, or with two gibs as shown in Fig. 661.

The gibs serve to keep the straps from spreading. In Fig. 662 the side *a b* of the gib and *c d* of the cotter

are parallel to each other, and perpendicular to the axis of the rod, and the taper comes between the gibs and cotter.

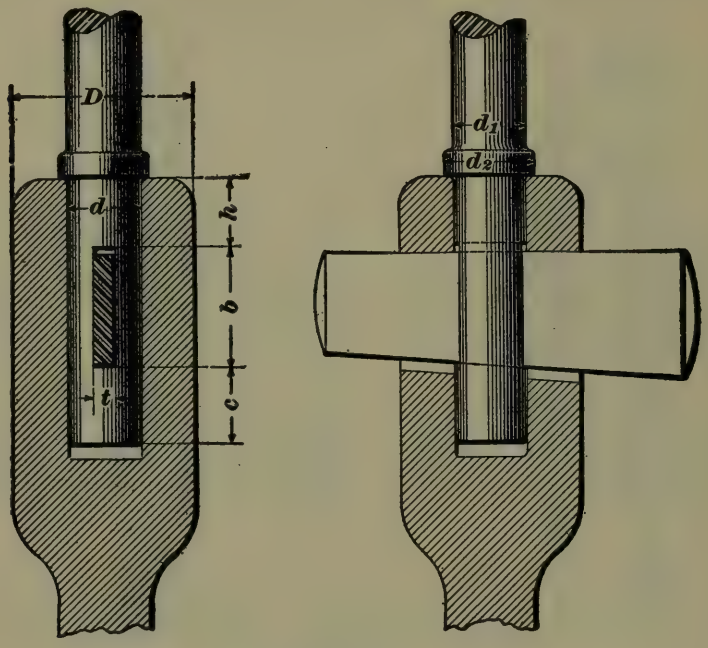

FIG. 658.

1968. Strength and Proportions of Cotters.—In designing a cotter connection the following points must be taken into account:

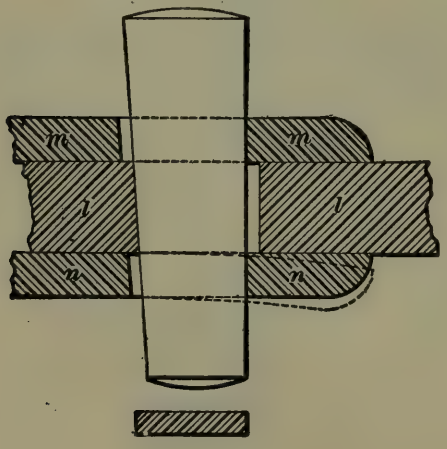

FIG. 659.

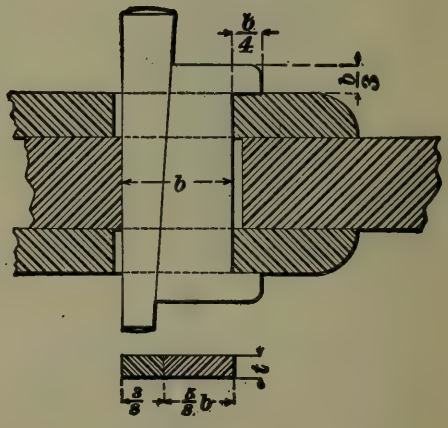

FIG. 660.

Referring to the illustration of the cotter, Fig. 654—

1. The cross-section $b\,t$ of the cotter must be sufficient to withstand the shearing force.

2. The thickness t must be great enough to provide against failure by crushing.

3. The two diameters d_1 and d should be so designed that the rod is of uniform strength throughout.

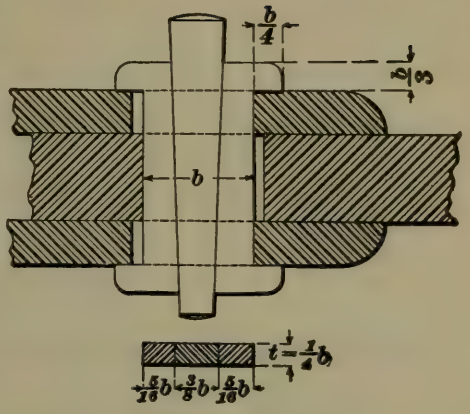

FIG. 661.

Let P = force in pounds exerted on the rod;

S_s = *safe* shearing strength of cotter in pounds per square inch;

S_c = *safe* compressive strength of cotter or rod in pounds per square inch;

S_t = *safe* tensile strength of rod in pounds per square inch.

The various diameters and other dimensions are indicated on the figures.

Consider the arrangement shown in either Fig. 656 or Fig. 657 and conceive a section taken through the cotter hole. The net area of the rod is $\left(\frac{\pi}{4}d^2 - d\,t\right)$, very nearly; the shearing area of the cotter is $2\,b\,t$; the area of the cotter subject to crushing is $d\,t$, very nearly; the area of the socket subject to tension is $\frac{\pi}{4}\,(D^2 - d^2) - (D - d)t$; finally, the area of the smaller part of the rod is $\frac{1}{4}\pi d_1^2$.

Hence,
$$P = \left(\frac{\pi}{4}d^2 - d\,t\right)S_t. \qquad (a)$$
$$P = 2\,b\,t\,S_s. \qquad (b)$$
$$P = d\,t\,S_c. \qquad (c)$$
$$P = \left[\frac{\pi}{4}(D^2 - d^2) - (D - d)\,t\right]S_t. \qquad (d)$$
$$P = \frac{\pi}{4}d_1^2\,S_t. \qquad (e)$$

Suppose both rod and cotter are made of the same material, either wrought iron or steel, and take $\frac{S_s}{S_t} = \frac{4}{5}$, as was done before in Art. **1954.**

Experience shows that S_c may be double S_t; that is, $\frac{S_c}{S_t} = 2$.

$$\text{Hence, } \frac{S_c}{S_s} = \frac{2}{\frac{4}{5}} = 2\tfrac{1}{2}.$$

Now, combining equations (b) and (c),

$$2\,b\,t\,S_s = d\,t\,S_c; \text{ or, } b = \frac{d\,S_c}{2S_s} = \frac{d}{2} \times 2\tfrac{1}{2} = 1.25\,d.$$

Combining equations (a) and (c), we have

$$\left(\frac{\pi}{4}d^2 - d\,t\right) = d\,t\,\frac{S_c}{S_t} = 2\,d\,t;$$

whence, $3\,d\,t = \frac{\pi}{4}d^2$, and $t = \frac{\pi}{12}d = .26\,d = \text{say } \frac{1}{4}\,d.$

Combining equations (a) and (d), and taking $t = \frac{\pi}{12}d$, it will be found that

$$D = \frac{4}{3}d = 1.3\,d.$$

Combining equations (a) and (e), and taking $t = \frac{\pi\,d}{12}$,

$$\frac{\pi}{4}d_1^2 = \frac{\pi}{4}d^2 - d\,t = \frac{\pi}{4}d^2 - \frac{\pi}{12}d^2; \text{ whence,}$$
$$d_1^2 = \tfrac{2}{3}d^2, \text{ and } d_1 = .816\,d.$$

It was shown above that to have the same tensile strength as the rod, the diameter D of the socket or boss should be 1.3 d.

To prevent failure from crushing, however, the bearing surface of the socket should equal that of the rod, or

$$(D - d)\,t = d\,t. \quad \text{Hence, } D = 2\,d.$$

The diameter d_2 of the collar, Fig. 658, should be such that the bearing surface of the collar is at least equal to that of the cotter in the rod. Hence,

$$\frac{\pi}{4}\left(d_2^2 - d^2\right) = d\,t = \frac{\pi}{12}d^2;$$

whence, $\frac{\pi}{4}d_2^2 = \frac{\pi}{3}d^2$, and $d_2 = d\sqrt{\frac{4}{3}} = 1.15\,d$.

Collecting the above results, we have

$$\left.\begin{array}{l} b = 1\frac{1}{4}\,d; \\ t = \frac{1}{4}\,d; \\ d_1 = .816\,d; \\ D = 2\,d; \\ d_2 = 1.15\,d; \\ h = c = \frac{3}{4}\,d \text{ to } 1\frac{1}{4}\,d. \end{array}\right\} \quad \textbf{(239.)}$$

1969. If a steel cotter be used in a wrought-iron rod, b may be made equal to d, the other dimensions remaining the same as above.

For a cotter of the form shown in Fig. 660 or 661 it is good practice to make $t = \frac{1}{4}\,b$, and $b\,t = \frac{5}{4} \times$ sectional area of strap.

The width b is the same whether a single cotter, a gib and cotter, or two gibs and cotter are used. The other proportions are shown on the figures.

EXAMPLE.—Suppose in Fig. 661 the strap is $\frac{7}{8}'' \times 3\frac{1}{2}''$; find the thickness of the cotter, and combined width of gibs and cotter.

SOLUTION.—$b\,t = \frac{5}{4} \times \frac{7}{8} \times 3\frac{1}{2} = \frac{245}{64}$. Making $t = \frac{1}{4}\,b$, as stated above,

$$b\,t = \tfrac{1}{4}\,b^2 = \frac{245}{64};$$

whence, $\quad b = \sqrt{\frac{245}{16}} = 3.91'' = 3\frac{15}{16}''$. Ans.

$t = \frac{1}{4}\,b = 1$ inch, nearly. Ans.

The width of cotter is, then, $\frac{3}{8}\,b$, or $1\frac{1}{2}''$, and the width of each gib is $\frac{5}{16}\,b$, or $1\frac{7}{32}''$.

1970. Taper of Cotters.—The greatest allowable taper that a cotter may have without danger of slacking back is about $\frac{1}{7}$.

Usually, the taper is $\frac{1}{24}$ to $\frac{1}{48}$ when the cotter is not secured. If fastened by a set-screw or bolt and nut the

cotter may have a taper of $\frac{1}{6}$ or $\frac{1}{8}$. The taper is found by dividing the increase in width by the length of cotter. Thus, if a cotter is 2 inches wide at one end, $2\frac{1}{2}$ inches wide at the other, and 12 inches in length, the taper is $(2\frac{1}{2} - 2) \div 12 = \frac{1}{24}$.

1971. Locking arrangements for cotters are shown in Figs. 662 and 663. In Fig. 662 the cotter is held

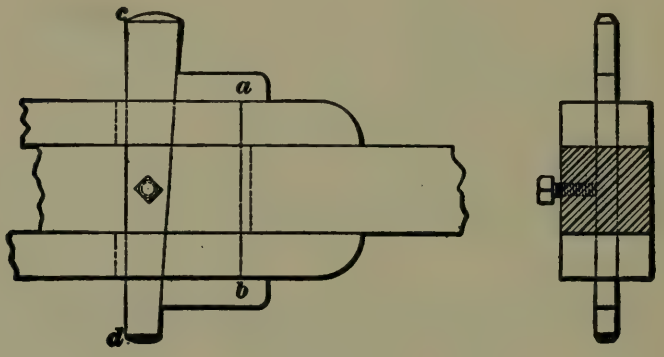

FIG. 662.

by a set-screw, the point of which fits into a groove cut into the cotter. The diameter of the set-screw may be $\frac{1}{3}\,b + \frac{1}{8}''$. In the arrangement shown in Fig. 663 the end of the cotter is a screw, and the cotter is secured by a nut on an extra seat. This method is used where the cotter has an excessive taper.

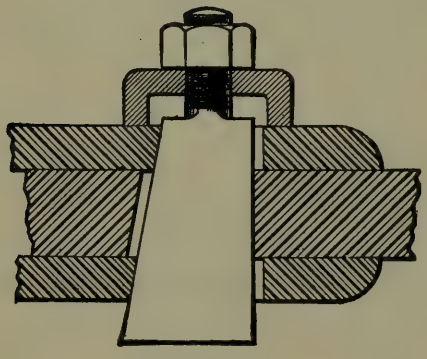

FIG. 663.

FIG. 664.

1972. A split pin is a form of cotter which is used not to firmly connect two pieces, but to prevent them from separating entirely. Small split pins are of the form shown in Fig. 664. When large pins are used for this purpose they are solid and tapered.

EXAMPLES FOR PRACTICE.

1. Find the dimensions of a rod and socket of the form shown in Fig. 658, assuming $S_t = 6{,}000$ pounds. The load or pull on the rod is 4,600 pounds.

Ans. $\begin{cases} d = 1\frac{3}{16} \text{ in.}; \ b = 1\frac{1}{2} \text{ in.}; \\ d_1 = 1 \text{ in.}; \quad t = \frac{19}{64} \text{ in.}; \\ d_2 = 1\frac{1}{8} \text{ in.}; \ D = 2\frac{3}{8} \text{ in.}; \\ h = 1 \text{ in.} \end{cases}$

2. A cotter of the form shown in Fig. 655, resists a pull of 3,200 pounds. Find the necessary breadth and thickness on the assumption that S_s is 4,000 pounds, and that the thickness is one-fourth the breadth.

Ans. $\begin{cases} b = 1.27 = 1\frac{1}{4} \text{ in.} \\ t = \frac{5}{16} \text{ in.} \end{cases}$

3. A cotter and two gibs connect two straps to a rod, as shown in Fig. 661. Supposing the pull on the rod to be 9,000 pounds, and taking $S_s = 5{,}400$ for steel, find the dimensions of cotter and gibs.

Ans. $\begin{cases} t = \frac{15}{32} \text{ in.} \\ \text{Width of cotter} = \frac{11}{16} \text{ in.} \\ \text{Width of gibs} = \frac{9}{16} \text{ in.} \end{cases}$

4. In example 3, (*a*) what should be the *net* section of the strap to be equal in strength to the cotter? Assuming the thickness of strap to be $\frac{1}{4}$ the width, (*b*) what would be its actual dimensions?

Ans. $\begin{cases} (a) \ .85 \text{ sq. in.} \\ (b) \ 2\frac{1}{8} \text{ in.} \times \frac{17}{32} \text{ in.} \end{cases}$

5. Calculate the dimensions of a steel cotter which fastens a wrought-iron rod $2\frac{3}{8}$ in. in diameter. Ans. $2\frac{3}{8}$ in. $\times \frac{19}{32}$ in.

6. A cotter is $1\frac{3}{4}$ inches wide in the middle and tapers on each side. If the cotter is 18 inches long, what is its width at each end? Assume that the taper is $\frac{1}{3}$ inch to the foot. Ans. $2\frac{1}{3}$ in. and $1\frac{5}{8}$ in.

ROTATING PIECES.

JOURNALS.

1973. Journals are the cylindrical portions of rotating pieces which turn within bearings and form the supports. Journals which are situated at or near the end of a shaft, axle, or other rotating piece, are termed **end journals.** Any journal situated between two end journals is called a **neck journal.**

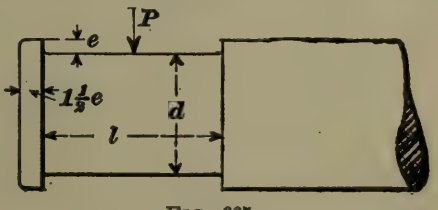

FIG. 665.

The ordinary form of an end journal is shown in Fig. 665. It consists simply of a

cylinder with collars at each end to prevent end play in the bearing.

The length of the step, seat, or bearing on which the journal rests, is, however, often made slightly shorter than the journal, permitting a slight motion lengthwise, and securing uniform wear.

SIZE AND PROPORTIONS OF END JOURNALS.

1974. The chief element in the design of a journal moving slowly or intermittently is strength. When journals run constantly at considerable velocity, strength is not so important a consideration as durability and freedom from liability to heat.

The dimensions of an end journal to give sufficient strength may be calculated by considering the journal as a cantilever uniformly loaded.

Let l = length of journal in inches;
d = diameter of journal in inches;
P = total load on journal in pounds;
S_f = *safe* stress of material in flexure.

Then, from the Table of Bending Moments, the bending moment is $\frac{wl^2}{2} = \frac{Pl}{2}$, and the resisting moment is $\frac{S_f I}{c}$, which for a circular section is (see Table of Moments of Inertia),

$$S_f \frac{\frac{\pi d^4}{64}}{\frac{1}{2}d} = S_f \frac{\pi d^3}{32}.$$

Hence, $$\frac{Pl}{2} = S_f \frac{\pi d^3}{32}, \qquad (a)$$

$$\text{or } d = \sqrt{\frac{16P}{\pi S_f} \times \frac{l}{d}} = 2.26 \sqrt{\frac{P}{S_f} \times \frac{l}{d}}. \qquad \textbf{(240.)}$$

Formula **240** gives the diameter of the journal when the ratio $\frac{l}{d}$ is assumed.

EXAMPLE.—Find the diameter and length of a wrought-iron journal on which there is a load of 1,200 pounds. Assume $S_f = 8{,}500$ pounds and $\frac{l}{d} = 1.4$.

SOLUTION.—Using formula **240,**

$$d = 2.26\sqrt{\frac{P}{S_f} \times \frac{l}{d}} = 2.26\sqrt{\frac{1{,}200}{8{,}500} \times 1.4} = 1'', \text{ nearly.} \quad \text{Ans.}$$

$$l = 1.4\, d = 1.4''. \quad \text{Ans.}$$

1975. The **bearing surface,** or **projected area,** of a journal is the length multiplied by the diameter; that is, it is the area of the projection of the journal on a plane. The total load on the journal divided by the projected area gives the pressure per square inch of projected area—a quantity which will be denoted by p.

$$\text{Hence,} \quad p = \frac{P}{l\,d}, \text{ or } P = p\,l\,d. \qquad (b)$$

In order that the journal may not heat, the pressure p must not exceed a certain limit determined by experience. When this pressure is too great, the oil used to lubricate the journal is squeezed out, and the journal heats rapidly.

From equation (a), $P = \frac{\pi S_f d^3}{16\,l}$.

From equation (b), $P = p\,l\,d$.

Hence, $\frac{\pi S_f d^3}{16\,l} = p\,l\,d$, or $\pi S_f d^2 = 16\,p\,l^2$; and

$$\frac{l}{d} = \sqrt{\frac{\pi S_f}{16\,p}}. \qquad (c)$$

Substituting this value of $\frac{l}{d}$ in **240,** we obtain, after a slight reduction,

$$d = \sqrt{\frac{4\,P}{\sqrt{\pi S_f p}}} = 1.5\sqrt{\frac{P}{\sqrt{S_f p}}}. \qquad \textbf{(241.)}$$

$$\text{From equation } (b), \quad l = \frac{P}{d\,p}. \qquad \textbf{(242.)}$$

Formula **241** may be used to compute the diameter of a journal when the pressure p per square inch of projected area is fixed. The length may then be obtained from formula **242.**

EXAMPLE.—Compute the length and diameter of a steel journal sustaining a load of 12,000 pounds. The safe stress S_f is 14,000 pounds, and the pressure per square inch of projected area is not to exceed 750 pounds.

SOLUTION.—Using formula **241,**

$$d = 1.5\sqrt{\frac{P}{\sqrt{S_f p}}} = 1.5\sqrt{\frac{12{,}000}{\sqrt{14{,}000 \times 750}}} = 2.89'', \text{ say } 2\tfrac{7}{8}''. \quad \text{Ans.}$$

Hence,
$$l = \frac{P}{d p} = \frac{12{,}000}{2\frac{7}{8} \times 750} = 5\tfrac{9}{16}''. \quad \text{Ans.}$$

1976. The pressure p per square inch of projected area may be taken at from 400 to 800 pounds, when the journal runs constantly at a speed under 150 revolutions per minute. For journals which run slowly or intermittently, p may be much greater, while for journals running faster than 150 revolutions per minute, the pressure p should vary inversely as the number of revolutions. That is, letting N = number of revolutions per minute, $p = \frac{a}{N}$, where a is a constant.

Another consideration affecting the allowable pressure p is the direction of the load. In some journals the load acts only in one direction, generally downwards; in others, as, for example, crank-pins and cross-head pins, the direction of the load changes at every revolution. In the latter case, the pressure p may be twice as great as in the former, because the change in the direction of the load permits a more perfect lubrication of the bearing. When, however, the direction of the load is variable, the safe stress S_f must be taken smaller than when the direction is constant.

1977. The following values of p for different kinds of journals are taken from Unwin:

TABLE 45.

PRESSURE ON BEARINGS AND SLIDES.

Kind of Journal Bearing.	Pressure per Sq. In. of Projected Area, p.
Bearings on which the load is intermittent and the speed slow, such as crank-pins of shearing machines	3,000 lb.
Cross-head neck journals	1,200 lb.
Crank-pins of large, slow-speed engines	800 to 900 lb.
Crank-pins of marine engines, usually	400 to 500 lb.
Main crank-shaft bearings—marine engines (slow)	600 lb.
Main crank-shaft bearings—marine engines (fast)	400 lb.
Locomotive driving axle journal	180 to 350 lb.
Railway journals	200 lb.
Fly-wheel shaft journals	150 to 250 lb.
Small engine crank-pins	150 to 200 lb.
Slipper slide blocks, marine engines	100 lb.
Stationary engine slide blocks	25 to 125 lb.
Stationary engine slide blocks, usually	30 to 60 lb.
Propeller thrust bearings	50 to 70 lb.
Shaft in cast-iron steps or seats	15 lb.

For journals not given above, the value of p must be determined by the judgment of the designer. The value adopted should seldom or never exceed 750 pounds. For journals running faster than about 150 revolutions per minute, p should vary inversely as the number of revolutions. For example, if a given journal is allowed a bearing pressure of 300 pounds at 150 revolutions, it should only be allowed a bearing pressure of $\frac{300 \times 150}{250} = 180$ pounds if it is required to run at 250 revolutions.

1978. The permissible working stress S_f may be taken as follows:

TABLE 46.

Direction of Load Constant.		Direction of Load Variable.	
Steel	$S_f = 14{,}000$	Steel	$S_f = 12{,}000$
Wrought iron	$S_f = 8{,}500$	Wrought iron	$S_f = 7{,}000$
Cast iron	$S_f = 4{,}000$	Cast iron	$S_f = 3{,}000$

NECK JOURNALS.

1979. A neck journal similar to an engine cross-head pin may be considered as a beam supported at both ends and uniformly loaded. Consequently, the bending moment is $\frac{w l^2}{8} = \frac{P l}{8}$. (See Table of Bending Moments and Deflections.)

Hence, $\frac{P l}{8} = \frac{S_f \pi d^3}{32}$, (see (*a*), Art. **1974**),

$$\text{and } d = \sqrt{\frac{4P}{\pi S_f} \times \frac{l}{d}} = 1.13\sqrt{\frac{P}{S_f} \times \frac{l}{d}}. \qquad \textbf{(243.)}$$

Formula **243** may be used to calculate a neck journal when $\frac{l}{d}$ is given or assumed.

But, $P = p\,d\,l$, (see (*b*), Art. **1975**).

Hence, $\frac{P l}{8} = \frac{p\,d\,l^2}{8} = \frac{S_f \pi d^3}{32}$, or $\frac{l}{d} = \sqrt{\frac{\pi S_f}{4p}}$. (*d*)

Substituting this value of $\frac{l}{d}$ in formula **243**, we obtain

$$d = 1.06\sqrt{\frac{P}{\sqrt{p S_f}}}. \qquad \textbf{(244.)}$$

From $P = p\,d\,l$, $\qquad l = \frac{P}{p\,d}$. $\qquad$ **(245.)**

The same values of S_f and p may be taken as for end journals.

It will be seen by comparing formulas **241** and **244** that for the same load the neck journal need be but about $\frac{3}{4}$ the diameter of the end journal; and a comparison of

equations (c) and (d) shows that the ratio $\frac{l}{d}$ is double in a neck journal what it would be in an end journal.

NOTE.—In using formulas **241** and **244** it will be found most convenient to use logarithms. Thus, applying logarithms to formula **241** it becomes $\log d = \log 1.5 + \frac{1}{2}[\log P - \frac{1}{2}(\log p + \log S_f)]$.

EXAMPLE.—Find the length and diameter of a wrought-iron neck journal, the load being 9,600 pounds, variable in direction. Allow a bearing pressure of 600 lb. per square inch.

SOLUTION.—Using formula **244**,

$$d = 1.06\sqrt{\frac{P}{\sqrt{p\,S_f}}} = 1.06\sqrt{\frac{9{,}600}{\sqrt{600 \times 7{,}000}}}, \text{ or}$$

$$\log d = \log 1.06 + \tfrac{1}{2}[\log P - \tfrac{1}{2}(\log p + \log S_f)] =$$

$$.02531 + \tfrac{1}{2}[3.98227 - \tfrac{1}{2}(2.77815 + 3.84510)] = .36063;$$

whence, $d = 2.295'' = 2\frac{19}{64}''$, or nearly $2\frac{5}{16}''$. Ans.

$$l = \frac{P}{p\,d} = \frac{9{,}600}{600 \times 2\frac{5}{16}} = 7'', \text{ nearly.} \quad \text{Ans.}$$

1980. It may sometimes be desirable to make the length of a journal greater than the calculated value, simply as a matter of taste. To give the journal the same strength, its diameter must be increased in the proportion given by the following formula:

$$\frac{l_1}{l} = \left(\frac{d_1}{d}\right)^3, \qquad \textbf{(246.)}$$

where l and d are the original and l_1 and d_1 the new lengths and diameters of the journal, respectively.

For example, suppose a wrought-iron end journal to be subjected to a load of 350 pounds. Assuming $\frac{l}{d} = 1.4$, the dimensions of the journal will be

$$d = 2.26\sqrt{\frac{P}{S_f} \times \frac{l}{d}} = 2.26\sqrt{\frac{350}{8{,}500} \times 1.4} = .5426''.$$

$$l = 1.4\,d = 1.4 \times .5426 = .7596''.$$

Say the diameter is $\frac{9}{16}''$ and the length $\frac{3}{4}''$.

Though a journal of these dimensions would be sufficiently stiff and durable for the load, it is rather small to

look well. Suppose the length is made double the calculated value; that is, $l_1 = 2\,l$. Then, from formula **246,**

$$d_1 = d\sqrt[3]{\frac{l_1}{l}} = .5426\sqrt[3]{2} = .6837'' = \tfrac{11}{16}'', \text{ nearly.}$$

$$l_1 = 2\,l = 2 \times \frac{3}{4} = 1\frac{1''}{2}.$$

FRICTION OF JOURNALS.

1981. The work expended in overcoming the friction of a journal is

$$W = fPN\frac{\pi d}{12} \text{ foot-pounds per minute;}$$

where f = coefficient of friction,
and N = revolutions per minute.

It is therefore apparent that with the same load and speed, the work expended against friction is directly proportional to the diameter of the journal. Consequently, when a journal runs under a steady, uniform load, it is preferable to make the diameter as small as possible, consistent with strength, and obtain the desired projected area by adding to the length of the journal.

For example, take two journals, one 2 inches in diameter and 6 inches long, the other 4 inches in diameter and 3 inches long. They each have the same projected area, 12 inches. The latter journal, however, requires double the work to overcome friction that the former requires, and, besides, contains twice as much material. Hence, the $2'' \times 6''$ journal is preferable for a steady load. On the other hand, the $4'' \times 3''$ journal is $\frac{4^3 \times 6}{2^3 \times 3} = 16$ times as strong as the other, and would be preferred in situations where the load is variable, and the journal is liable to shocks, as in the case of crank-pins of high-speed engines.

1982. The height of the journal collars, Fig. 665, may be

$$e = \frac{d}{10} + \frac{1''}{8}. \qquad \textbf{(247.)}$$

The width of the outer collar is $1\frac{1}{2}\ e$. It is good practice to turn the journal with a fillet in the corner, as the shaft or axle is more liable to crack and fracture if the shoulder is turned with a square corner.

The fillet may be a circular arc drawn with a radius equal to $\frac{e}{2}$.

PIVOTS AND COLLAR JOURNALS.

1983. A **pivot journal** is shown in Fig. 666. It differs from an ordinary journal in that the direction of pressure is parallel to the axis of the shaft instead of perpendicular to it. The bearing area is, therefore, the area of the end of the pivot, $\frac{1}{4}\pi d^2$.

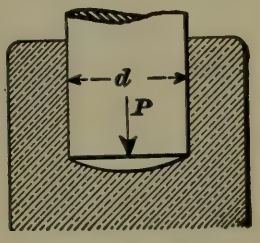

FIG. 666.

The diameter of a flat pivot may, therefore, be found at once by assuming a value for the pressure per square inch of projected area and solving for the area. The following formulas give good results for ordinary cases:

Let P = load on pivot;
d = diameter of pivot;
N = revolutions per minute of pivot.

TABLE 47.

	Wrought-Iron or Steel Pivot on Gun-Metal Bearing.	Cast-Iron Pivot on Gun-Metal Bearing.	Iron or Steel on Lignum-vitæ Bearing, Moistened with Water.
Case I—Pivot turning very slowly or intermittently ...	$d = .035\sqrt{P}$.	$d = .05\sqrt{P}$.	..... **(248.)**
Case II — Revolutions per minute less than 150....	$d = .05\sqrt{P}$.	$d = .07\sqrt{P}$.	$d = .035\sqrt{P}$. **(249.)**
Case III — Revolutions per minute more than 150...	$d = .004\sqrt{PN}$.	.....	$d = .035\sqrt{P}$. **(250.)**

EXAMPLE.—What should be the diameter of a steel pivot on gun-metal bearings, the load being 200 lb., and the number of revolutions 320 per minute?

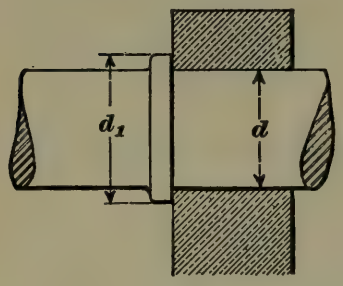

FIG. 667.

SOLUTION.—

$d = .004\sqrt{PN} = .004\sqrt{200 \times 320} = 1''$, nearly. Ans.

1984. In a **collar journal** the direction of the load is parallel to the axis of the shaft, but the bearing area is formed by a collar raised on the shaft. A journal with one collar is shown in Fig. 667, and one with several collars in Fig. 668.

Letting d_1 and d represent the diameters of collars and shaft, respectively; b, the number of collars; p, the pressure per square inch of projected area, and P, the total load or thrust, we have

$$\tfrac{1}{4}\pi (d_1^2 - d^2)\ b\ p = P.$$

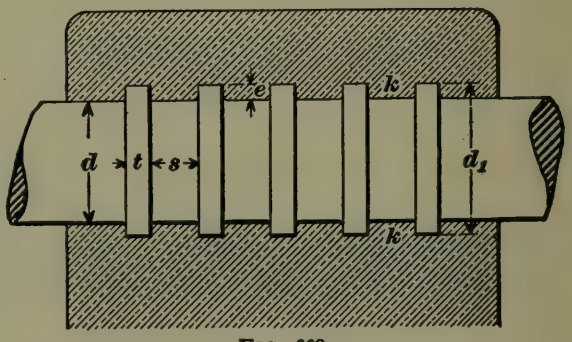

FIG. 668.

The value of p is usually taken at 60 lb. per square inch for the thrust bearings of propeller shafts, and this value should not be much exceeded in any case.

$$\text{Then, } d_1^2 - d^2 = \frac{P}{15\,\pi\,b},$$

$$\text{or } d_1 = \sqrt{d^2 + \frac{P}{15\,\pi\,b}}. \qquad \textbf{(251.)}$$

The number of collars b depends upon the judgment of the designer. The larger the number the smaller is the diameter, and the less will be the wear and work of friction. On the other hand, when many collars are used, there is danger of bringing all the thrust on one or two.

In Fig. 668 the dimension $e = \frac{1}{2}(d_1 - d)$. Usually the thickness t of the collars is $= .8\ e$, and the width s of the space is equal to the thickness t, unless the annular encircling

rings k are hollow for water circulation, or unless they are lined with white metal.

In the latter case, $s = 2$ to $2\frac{1}{2}\ t$.

EXAMPLES FOR PRACTICE.

1. Find the proportions of a cast-iron end journal, turning slowly under a steady load of 15,000 lb., assuming the length equal to the diameter. Ans. $4\frac{8}{8}'' \times 4\frac{8}{8}''$.

2. Find the proportions of a wrought-iron end journal, turning under a load of 8,600 lb., assuming the safe pressure per square inch of projected area to be 650 lb. The direction of the load is variable. Ans. $3'' \times 4\frac{7}{16}''$.

3. Find the dimensions of a steel neck journal, working under a load of 12,000 lb., direction variable, the allowable bearing pressure to be 1,200 lb. per sq. in. Ans. $1\frac{7}{8}'' \times 5\frac{5}{16}''$.

4. Find the minimum dimensions of a wrought-iron end journal, the required conditions being that the bearing pressure shall not exceed 750 pounds, and the length shall be one and one-fourth times the diameter. The load on the journal is 9,600 pounds, and variable in direction. Ans. $3\frac{3}{16}'' \times 4''$.

5. Find the diameter of a wrought-iron pivot running at a speed of 80 revolutions per minute and bearing a load of 800 pounds, gun-metal bearing. Ans. $1\frac{7}{16}$ in.

6. Assuming 5 thrust collars on a shaft 10 inches in diameter subjected to an end thrust of 20,000 pounds, find the diameter and thickness of collars. Ans. $\begin{cases} d_1 = 13.6''. \\ t = 1\frac{7}{16}''. \end{cases}$

SHAFTS.

1985. Shafts may be divided into three classes, according to the kind of stress to which they are subjected:

(1) Shafts subjected chiefly to torsion or twisting, as, for example, line shafting in mills and shops, and, in general, shafts used to transmit power.

(2) Shafts subjected chiefly to bending action, such as the axles of gears, etc.

(3) Shafts subjected to both twisting and bending, such as engine crank-shafts.

LINE SHAFTING.

1986. Line shafting is a term applied to the long and continuous lines of shafting used in mills, factories, and shops for the distribution of power. The shaft is principally

strained by torsion, but there is always in addition a bending action due to the weight of the shaft itself, and the pulleys carried by it, and also due to the tension of belting or the thrust of gearing.

In calculating the diameter of a shaft for a given twisting moment, two things must be considered: 1. Strength. 2. Stiffness. Very large shafts or short shafts need be calculated for strength only; but in long lines of shafting of small diameter attention must be paid to stiffness and rigidity.

The twisting moment is $P\ R$, where P is the twisting force and R the distance between the line of action of the force and the center of the shaft. In case of a belted pulley, shown in Fig. 669, the force P is the difference in the ten-

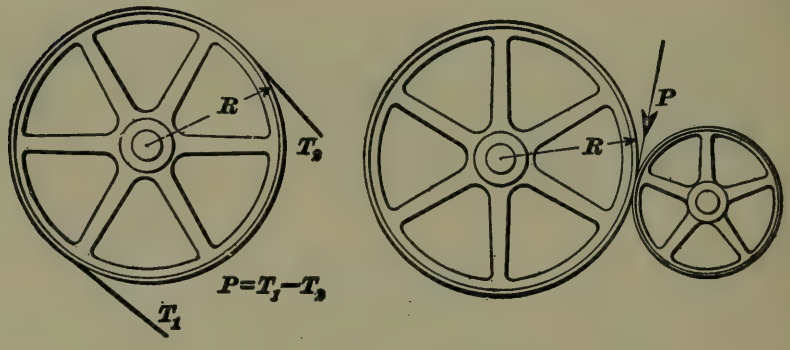

FIG. 669.

sions of the tight and slack sides of the belt; the distance R is the radius of the pulley. Or, again, R may be the radius of a gear attached to the shaft in question.

It is usually more convenient to express the twisting moment in terms of the horsepower transmitted by the shaft, and number of revolutions.

By formula **231**, $PR = 63{,}025\ \frac{H}{N}$. The resistance of a shaft to twisting is given by a formula similar to formula **116**, $M = S_s \frac{I}{c}$, Art. **1398.**

Let S_s = the safe shearing strength of shaft;
J = polar moment of inertia of cross-section of shaft about neutral axis;
c = distance from neutral axis to outermost fiber.

Then, the moment of resistance to twisting is $\frac{S_s J}{c}$.

Where a plane section revolves, or is conceived to revolve, about a line lying in the plane of the section, as, for example, a circular section revolving about its diameter, the moment of inertia obtained with reference to this axis is termed the **rectangular moment of inertia,** and is nearly always denoted in text-books by I. When, however, the section revolves about an axis perpendicular to the plane of section, as, for example, a buzz saw or fly-wheel, the moment of inertia found with respect to this axis is termed the **polar moment of inertia,** and is nearly always denoted in text-books by J. Those moments of inertia used in the subject of Strength of Materials were rectangular moments. For a solid circular section, $J = 2I = 2 \times \frac{\pi d^4}{64} = \frac{\pi d^4}{32}$; and for a hollow circular section,

$$J = \frac{\pi(d^4 - d_1^4)}{32}.$$

The reason for using the safe shearing stress S_s in the expression $\frac{S_s J}{c}$ is that its value agrees very closely with the value for torsion; it is quite different from the safe stress for flexure. The student may obtain the value of S_s by simply dividing the ultimate shearing stress by the proper factor of safety; i. e., $S_s = \frac{S_s}{f}$.

Placing the twisting and resisting moments equal to each other, we have

$$PR = 63{,}025\frac{H}{N} = \frac{S_s J}{c} = S_s \frac{\frac{\pi d^4}{32}}{\frac{d}{2}} = S_s \frac{\pi d^3}{16}.$$

Whence, $$d = \sqrt[3]{\frac{16\,PR}{\pi\,S_s}} = 1.72\sqrt[3]{\frac{PR}{S_s}}. \qquad \textbf{(252.)}$$

Or, $$d = \sqrt[3]{\frac{16 \times 63{,}025\,H}{\pi N S_s}} = 68.5\sqrt[3]{\frac{H}{N S_s}}. \qquad \textbf{(253.)}$$

Let $\sqrt[3]{\frac{16}{\pi\,S_s}} = k$, and $\sqrt[3]{\frac{16 \times 63{,}025}{\pi\,S_s}} = k_1$.

Then, $$d = k\sqrt[3]{PR} = k_1\sqrt[3]{\frac{H}{N}}, \qquad \textbf{(254.)}$$

as in formula **124**, Art. **1416.**

The values of k and k_1 depend upon the value of the safe stress S_s assumed for the material of the shaft.

If we take $S_s = 3{,}400$ for cast iron;
$S_s = 6{,}800$ for wrought iron;
$S_s = 9{,}000$ for steel,

we obtain the values of k and k_1 given in Table 32, Art. **1416.**

1987. Formulas **252** and **253** are general, and may be used for any material; the proper value of S_s being left to the judgment of the designer. Ordinarily, the values of S_s given above are those used in good practice. Under exceptional circumstances it may be necessary to use lower values, particularly if the shaft is subjected to shocks, or if the stress changes suddenly or violently.

It has been shown that for strength the diameter of a shaft is proportional to the cube root of the twisting moment. A similar theoretical treatment would show that for *stiffness* the diameter of the shaft is proportional to the *fourth root* of the twisting moment.

Hence, for shafts of small diameter or of considerable length the diameter may be calculated by the formula $d = c\sqrt[4]{Pr} = c_1\sqrt[4]{\frac{H}{N}}$ and Table 31, Art. **1415.**

1988. Speed of Line Shafting.—The speed of a shaft is fixed largely by the speed of the driving belt or the diameters of the pulleys upon it. In general, machine shop

shafts run about 120 to 150 revolutions per minute; shafts driving woodworking machinery, about 200 to 250 revolutions per minute; in cotton mills, the practice is to make the shaft diameter smaller, and run at a higher speed. Line shafts should generally not be less than $1\frac{3}{4}$ inches in diameter.

1989. Distance Between Bearings.—This distance should not be great enough to permit a deflection of more than $\frac{1}{100}''$ per foot of length. Hence, when the shaft is heavily loaded with pulleys, the bearings must be closer than when it carries only a few pulleys.

Below are given the maximum distances between the bearings of different sizes of continuous shafts which are used for the transmission of power:

TABLE 48.

Diameter of Shaft in Inches.	Distance Between Bearings in Feet.	
	Wrought-Iron Shaft.	Steel Shaft.
2	11	11.5
3	13	13.75
4	15	15.75
5	17	18.25
6	19	20
7	21	22.25
8	23	24
9	25	26

Pulleys which give out a large amount of power should be placed as near a hanger as possible.

SHAFTS SUBJECTED TO BENDING.

1990. Under this head are included the axles of large water-wheels, gear-wheels, etc., which are loaded transversely. The axle is not generally strained by twisting, and

may be treated as a beam transversely loaded. The mode of procedure may, perhaps, be best shown by an example.

EXAMPLE.—An axle 12 feet long, between centers of bearings, carries a wheel weighing 9 tons; the wheel is 4 feet from one end of the shaft. The axle is of wrought iron. Required, the dimensions.

SOLUTION.—Let the line $m\,n$, Fig. 670, represent temporarily the axle in question; P, the load of 9 tons, and R_1 and R_2, the reactions.

Lay off to scale the load P on the vertical through R_1, and, choosing a pole O, draw the rays $O1$, $O3$, and $a\,b$, and $c\,b$ parallel to them. Then, $a\,b\,c$ is the bending moment diagram. $O2$ is drawn parallel to $a\,c$, and gives the reaction $R_1 = 1\text{-}2 = 3$ tons, and $R_2 = 2\text{-}3 = 6$ tons.

The lengths and diameters of the journals may now be calculated. For the journal nearest the load, we have, from formula **241**,

$$d = 1.5\sqrt{\frac{R_2}{\sqrt{S_f p}}}, \text{ and}$$

assuming that $p = 700$ and $S_f = 8{,}500$,

$$d = 1.5\sqrt{\frac{12{,}000}{\sqrt{8{,}500 \times 700}}} = 3\tfrac{3}{8}'', \text{ nearly.}$$

$$l = \frac{R_2}{p\,d} = \frac{12{,}000}{700 \times 3\frac{3}{8}} = 5\tfrac{1}{8}'', \text{ nearly.}$$

For the other journal,

$$d' = 1.5\sqrt{\frac{R_1}{\sqrt{S_f p}}} = 1.5\sqrt{\frac{6{,}000}{\sqrt{8{,}500 \times 700}}} = 2\tfrac{3}{8}''.$$

$$l_1 = \frac{6{,}000}{700 \times 2\frac{3}{8}} = 3\tfrac{5}{8}''.$$

$d_4 = d' + 2\,e$, where $e = \frac{1}{10}\,d' + \frac{1}{8}'' = .3625'' = \frac{3}{8}''$, nearly.

Hence, $d_4 = 2\frac{3}{8}'' + \frac{3}{4}'' = 3\frac{1}{8}''$.

Likewise, $d_5 = d + 2(\frac{1}{10}\,d + \frac{1}{8}'') = 4\frac{5}{16}''$.

The resisting moment of a beam is $S\frac{I}{c}$ (see Art. **1398**), and since the safe stress S remains constant for the same beam, the resisting moment is proportional to $\frac{I}{c}$. For a beam of circular section,

$$\frac{I}{c} = \frac{\frac{\pi\,d^4}{64}}{\frac{d}{2}} = \frac{\pi\,d^3}{32}.$$

Hence, since $\frac{\pi}{32}$ is a constant quantity, the resisting moment at any section of a circular shaft is proportional to the cube of the diameter at that section. Conversely, the diameter of the shaft at any section must be proportional to the cube root of the resisting moment at that

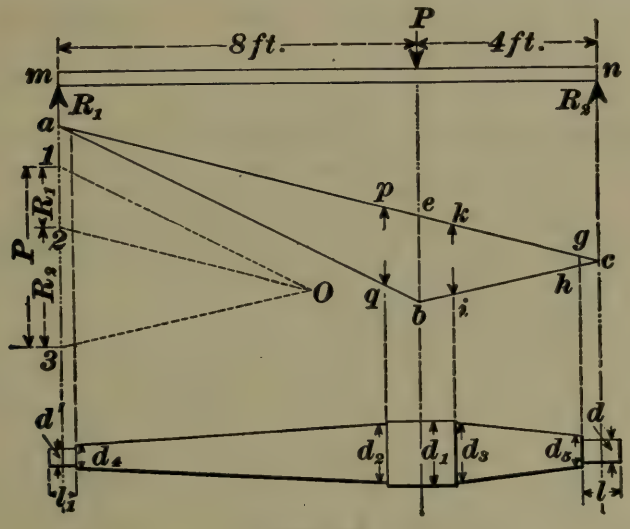

FIG. 670.

section, and to have the shaft of equal strength throughout, the diameter at each section should be proportional to the cube root of the *bending moment* at that section.

$$\text{Hence,} \quad \frac{d_1}{d} = \sqrt[3]{\frac{\text{moment } b\,e}{\text{moment } g\,h}}.$$

By measurement, the moment $b\,e$ is 288 inch-tons, and the moment $g\,h$ is $15\frac{3}{8}$ inch-tons.

$$\text{Whence,} \quad \frac{d_1}{d} = \sqrt[3]{\frac{288}{15\frac{3}{8}}} = 2.65;$$

$$\text{or,} \quad d_1 = 2.65\,d = 2.65 \times 3\tfrac{3}{8} = 9 \text{ inches, nearly.}$$

The shaft should be bossed at this point to allow for cutting the key-way. The depth of the sunk key $= \frac{1}{6}\,d_1 = 1\frac{1}{2}$ in. (See formula **233.**)

The depth of the key-way is, therefore, $\frac{3}{4}$ inch, and the diameter of the bossed portion $10\frac{1}{2}$ inches at least. The diameters d_2 and d_3 may be easily found by measuring the moments $p\,q$ and $k\,i$, whence,

$$d_2 = d_1 \sqrt[3]{\frac{q\,p}{b\,e}}, \text{ and } d_3 = d_1 \sqrt[3]{\frac{i\,k}{b\,e}}.$$

In a similar manner may be found the dimensions of an axle bearing two or more transverse loads.

The axle may or may not be tapered as shown in Fig. 670. If it is not tapered, its diameter must be calculated from the maximum bending moment ($b\ e$, in this case). A straight shaft is easier to construct, but the end journals must be, of course, larger, and there is considerable loss by friction on that account.

SHAFTS SUBJECTED TO COMBINED BENDING AND TWISTING.

1991. A good example of a shaft coming under this head is an engine crank-shaft carrying a heavy fly-wheel.

Let B = bending moment;

T = twisting moment;

T_1 = the twisting moment, which would have the same effect as B and T acting together.

$$\text{Then, } T_1 = B + \sqrt{B^2 + T^2}. \qquad \textbf{(255.)}$$

The twisting moment T_1 is called the **ideal twisting moment,** and should be used in formula **252** to determine the diameter of the shaft.

EXAMPLE.—Calculate the diameter of a steel crank-shaft for an engine from the following data: The length of stroke is 10 feet. The maximum tangential force acting on the crank-pin is 25 tons. The shaft is 10 feet long between centers of bearings, and carries midway between bearings a fly-wheel weighing 55 tons. Assume the safe stress to be 9,000 lb. = 4½ tons.

SOLUTION.—The twisting moment T = maximum tangential force × length of crank = 25 tons × 5 feet = 125 foot-tons = 1,500 inch-tons.

The bending moment $= \frac{1}{4} P l = \frac{55 \times 10}{4} = 137.5$ foot-tons = 1,650 inch-tons.

Then, $T_1 = B + \sqrt{B^2 + T^2} = 1{,}650 + \sqrt{1{,}650^2 + 1{,}500^2} = 3{,}880$ inch-tons.

Now, using formula **252**,

$$d = 1.72 \sqrt[3]{\frac{PR}{S_s}} = 1.72 \sqrt[3]{\frac{T_1}{S_s}} = 1.72 \sqrt[3]{\frac{3{,}880}{4.5}} = 16\tfrac{3}{8}'', \text{ nearly.} \quad \textbf{Ans.}$$

It will be noticed that, in the above solution, the units selected are inches and tons. Generally, when the bending and twisting moments are large, it is more convenient to use tons than pounds. Care must be taken, however, to

make the units consistent; for example, it would have been wrong to have taken the moments in *inch-tons*, and the safe stress in *pounds*.

1992. It is sometimes convenient to put formula **255** in another form.

Let $\frac{B}{T} = Z$; then, formula **255** becomes

$$T_1 = Z\,T + \sqrt{Z^2\,T^2 + T^2} = T\,(Z + \sqrt{Z^2+1}).$$

Let $Z + \sqrt{Z^2+1} = k$; then, $T_1 = k\,T$.

But, by formula **252,** the diameter is proportional to the cube root of the twisting moment. Therefore, if d is the diameter of shaft required by the twisting moment T, and d_1 the diameter required by the twisting moment T_1, $\frac{d_1}{d} = \sqrt[3]{\frac{T_1}{T}} = \sqrt[3]{k}$, or $d_1 = d\sqrt[3]{k}$.

The following table gives the values of $\sqrt[3]{k}$ for varying values of Z:

TABLE 49.

Z	$\sqrt[3]{k}$.	Z	$\sqrt[3]{k}$.	Z	$\sqrt[3]{k}$.
.2	1.068	1.2	1.403	2.2	1.665
.4	1.139	1.4	1.461	2.4	1.710
.6	1.209	1.6	1.516	2.6	1.753
.8	1.277	1.8	1.568	2.8	1.794
1.0	1.341	2.0	1.618	3.0	1.833

This table may be used advantageously for computing the diameter of shafts subjected to twisting and bending. The diameter is first computed for twisting alone, and is then multiplied by the value of $\sqrt[3]{k}$ corresponding to the ratio Z between the bending and twisting moments.

EXAMPLE.—A wrought-iron shaft transmits 150 horsepower at 125 revolutions per minute, and is at the same time subjected to a bending moment of 60,000 inch-pounds. Calculate the diameter of the shaft.

SOLUTION.—For twisting only,

$$d = 3.62\sqrt[3]{\frac{H}{N}} = 3.62\sqrt[3]{\frac{150}{125}}$$

See Art. **1416.**

By formula **231**, $T = PR = 63{,}025\,\frac{H}{N} = 75{,}630$ in.-lb.

$B = 60{,}000.$

Then, $\frac{B}{T} = Z = \frac{60{,}000}{75{,}630} = .8$, nearly.

From the above table $\sqrt[3]{k} = 1.277$.

Hence, $d = 1.277 \times 3.62 \sqrt[3]{\frac{150}{125}} = 4\frac{15}{16}''$. Ans.

HOLLOW SHAFTS.

1993. It is plain that the outer fibers of a shaft are much more useful in resisting a twisting or bending strain than the fibers near the center; hence, if a shaft is made hollow, its weight will be diminished in much greater proportion than its strength. In other words, a hollow shaft is stronger than a solid one containing the same amount of material per unit length.

Let d_1 = outside diameter of hollow shaft;
d_2 = inside diameter of hollow shaft;
d = diameter of solid shaft having the same strength as hollow shaft.

The resisting moment (see Art. **1398**) is $\frac{SI}{c}$. Taking the axis of the shaft as the neutral axis, I becomes J; the values of J for both hollow and solid shafts are double those given in the Table of Moments of Inertia, where the neutral axis is the diameter of a cross-section.

For a solid shaft, $\frac{S_s J}{c} = \frac{\frac{S_s \pi d^4}{32}}{\frac{d}{2}} = \frac{S_s \pi d^3}{16}$.

For a hollow shaft, $\frac{S_s J}{c} = \frac{\frac{S_s \pi (d_1^4 - d_2^4)}{32}}{\frac{d_1}{2}} = \frac{S_s \pi (d_1^4 - d_2^4)}{16\, d_1}$.

Hence, if the shafts are to be equally strong,

$$\frac{S_s \pi d^3}{16} = \frac{S_s \pi (d_1^4 - d_2^4)}{16 d_1},$$

$$\text{or} \quad d^3 = \frac{d_1^4 - d_2^4}{d_1} = d_1^3 \left(1 - \frac{d_2^4}{d_1^4}\right).$$

$$\text{Let } \frac{d_2}{d_1} = m. \quad \text{Then, } d^3 = d_1^3 (1 - m^4),$$

$$\text{or} \quad d_1 = d \sqrt[3]{\frac{1}{1 - m^4}}. \qquad \textbf{(256.)}$$

EXAMPLE.—Suppose we wish to find the diameter of a hollow shaft which will have the same strength as a solid shaft 8 inches in diameter, assuming the hole to be one-half the diameter.

SOLUTION.—Applying formula **256**, $m = \frac{1}{2}$, and

$d_1 = d \sqrt[3]{\frac{1}{1 - m^4}} = 8 \sqrt[3]{\frac{1}{1 - (\frac{1}{2})^4}} = 8.174$, say $8\frac{3}{16}''$ outside diameter, and $4\frac{3}{32}''$ inside diameter. Ans.

Hollow steel shafts are much used for marine engines.

SHAFT COUPLINGS.

1994. Couplings are used to connect the ends of shafts, and are of three kinds: 1. Fast or permanent couplings. 2. Loose couplings, or clutches, by means of which shafts may be connected or disconnected at pleasure. 3. Friction clutches, which are loose couplings that hold by friction.

1995. Box, or **Muff, Couplings.**—This coupling, as shown in Fig. 671, consists of a cast-iron cylinder which fits

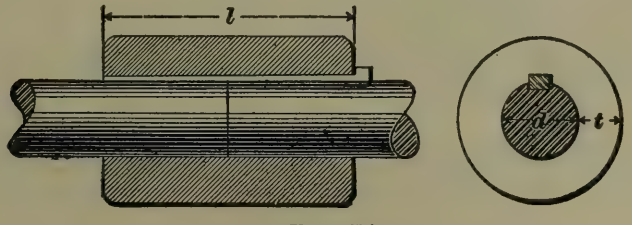

FIG. 671.

over the ends of the shaft. The two ends are prevented from moving relatively to each other by the sunk key. The key-way is cut half into the box and half into the shaft

ends. Quite commonly the ends of the shafts are enlarged to allow the key-way to be cut without weakening the shaft.

The key may be proportioned by the formulas already given. For the other dimensions take

$$\left.\begin{aligned} l &= 2\tfrac{1}{2}\,d + 2''. \\ t &= 4\ \ d + .5''. \end{aligned}\right\} \qquad \textbf{(257.)}$$

EXAMPLE.—Find the dimensions of a muff coupling for a shaft $2\frac{1}{4}''$ in diameter.

SOLUTION.—For the key we use formula **233.**

$$\left.\begin{aligned} b &= \tfrac{1}{4}\,d = \tfrac{1}{4} \times 2\tfrac{1}{2} = \tfrac{5}{8}''. \\ t &= \tfrac{1}{6}\,d = \tfrac{1}{6} \times 2\tfrac{1}{2} = \tfrac{7}{16}''. \end{aligned}\right\} \text{Ans.}$$

For the muff, we use formula **257.**

$$\left.\begin{aligned} l &= 2\tfrac{1}{2}\,d + 2'' = 2\tfrac{1}{2} \times 2\tfrac{1}{2} + 2'' = 8\tfrac{1}{4}''. \\ t &= .4\,d + .5'' = .4 \times 2\tfrac{1}{2} + .5'' = 1\tfrac{1}{2}''. \end{aligned}\right\} \text{Ans.}$$

1996. A **clamp coupling** is shown in Fig. 672. The faces for the joint are first planed off, the holes are drilled, and then the two halves are bolted together with pieces of

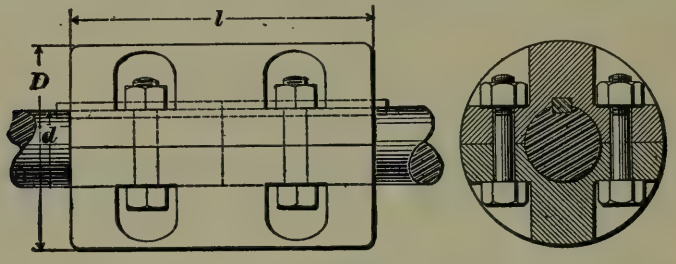

FIG. 672.

paper between them, after which the coupling is bored out to the exact size of the shaft. The pieces of paper upon being removed leave a slight space between the halves, and the coupling when bolted to the shaft grips it firmly.

This form of coupling is very easily removed or put on; it has no projecting parts, and may be used as a driving pulley, if desired. The key is straight, and fits only at the sides.

The following are the proportions used in practice:

d = diameter of shaft;

Diameter of coupling $D = 2\frac{1}{2}\,d + \frac{1}{2}''$;

Length of coupling $l = 4\,d$.

The diameter of the bolts may be $\frac{5}{8}''$ for shafts under $2\frac{1}{2}''$ in diameter; $\frac{3}{4}''$ for $2\frac{1}{2}''$ shaft, and $\frac{7}{8}''$ for larger shafts.

For shafts up to 3 inches in diameter use 4 bolts; for larger shafts use 6 bolts.

1997. The **flange coupling** is shown in Fig. 673. Cast-iron flanges are keyed to the ends of the shafts. To insure a perfect joint the flange is usually faced in the lathe after being keyed to the shaft. The two flanges are then brought face to face and bolted together. Sometimes the ends of the shafts are enlarged to allow for the key-way.

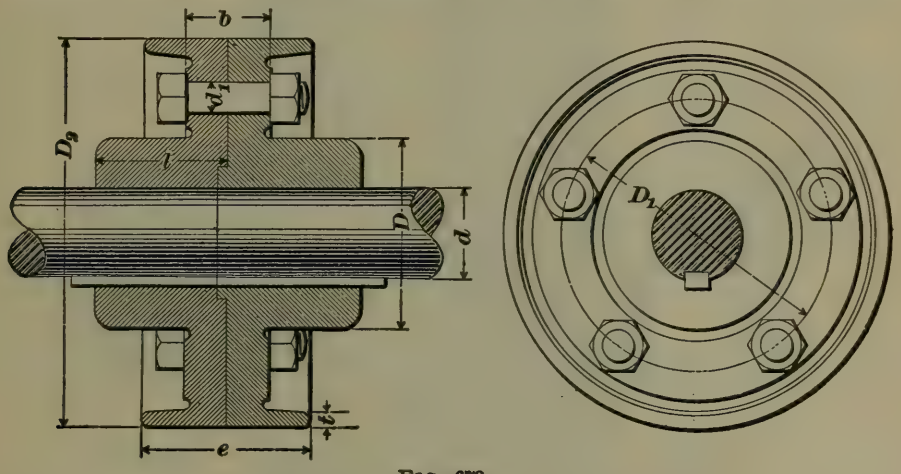

FIG. 673.

To prevent the possibility of the shafts getting out of line, the end of one may enter the flange of the other, as shown.

The following proportions may be used for the form of flange coupling shown in Fig. 673:

d = diameter of shaft.

$$\left.\begin{aligned} D &= 1\tfrac{3}{4}\,d + 1''; \\ \text{Diameter of bolt circle } D_1 &= 2\tfrac{1}{2}\,d + 2''; \\ l &= 1\tfrac{1}{8}\,d + 1''; \\ \text{Number of bolts } n &= 3 + \frac{d}{2}; \\ \text{(Take the nearest even number.)} & \\ \text{Diameter of bolts } d_1 &= \frac{d}{n} + \tfrac{1}{4}''; \\ \text{Diameter of coupling } D_2 &= 1.4\,D_1; \\ b &= \tfrac{1}{2}\,d + \tfrac{5}{8}''; \\ e &= 2\,b; \\ t &= \tfrac{1}{8}\,d. \end{aligned}\right\} \quad \textbf{(258.)}$$

The key may be proportioned by the formulas already given for keys.

1998. Solid flange couplings, shown in Fig. 674, are used largely to connect the sections of propeller shafts.

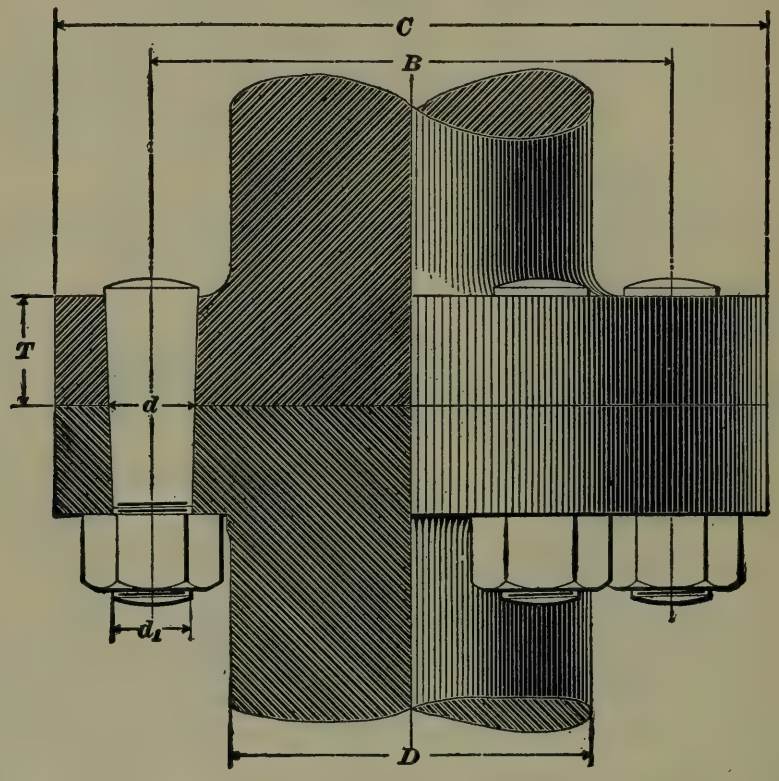

FIG. 674.

The flanges are forged on the ends of the shafts, and are connected by tapered bolts.

Let n = number of bolts uniting flanges;
d = diameter of the bolts at the joint formed by the flanges;
D = diameter of shaft;
B = diameter of bolt circle.

The shearing resistance of the bolts is $\frac{\pi d^2}{4} n S_s$, and the moment of this resistance about the center of shaft is

$$\frac{\pi d^2}{4} n S_s \times \frac{B}{2} = \frac{\pi d^2 n S_s B}{8}.$$

Now, it was shown in the derivation of formula **253** that the moment of resistance of the shaft when subjected to twisting is $\frac{\pi D^3}{16} S_s$. If the bolts and shafts are of equal strength,

$$\frac{\pi d^2 n S_s B}{8} = \frac{\pi D^3 S_s}{16},$$

$$\text{or} \qquad d^2 n B = \frac{D^3}{2}.$$

Approximately, $B = 1.6\ D$. Using this value, we obtain

$$1.6\ d^2 n D = \frac{D^3}{2}, \text{ or } d = \frac{D}{\sqrt{3.2\ n}}.$$

But more nearly, $B = D + 2\ d$.

Substituting for d its value just found,

$$B = D\left(1 + \frac{2}{\sqrt{3.2\ n}}\right).$$

$$\text{Whence, } d^2 n D\left(1 + \frac{2}{\sqrt{3.2\ n}}\right) = \frac{D^3}{2},$$

$$\text{or} \quad d = D\sqrt{\frac{\sqrt{3.2\ n}}{2n(\sqrt{3.2\ n} + 2)}} = k D \qquad \textbf{(259.)}$$

The values of $k = \sqrt{\frac{\sqrt{3.2\ n}}{2n(\sqrt{3.2\ n} + 2)}}$ for different values of n are as follows:

TABLE 50.

$n =$	3	4	5	6	7	8	9	10
$k =$	.318	.283	.258	.239	.224	.212	.201	.192

The following are the proportions of the other parts of the coupling:

$$\left.\begin{aligned} n &= \tfrac{1}{3}D + 2; \\ B &= D + 2d; \\ C &= D + 4\tfrac{1}{4}d; \\ T &= \frac{2D+1}{7}; \\ d_1 &= \tfrac{7}{8}d + \tfrac{1}{8}''. \end{aligned}\right\} \qquad \textbf{(260.)}$$

The bolts are tapered $\frac{3}{8}$ inch per foot of length.

1999. Seller's Cone Coupling.—This coupling is shown in Fig. 675. It consists of an outer box or muff

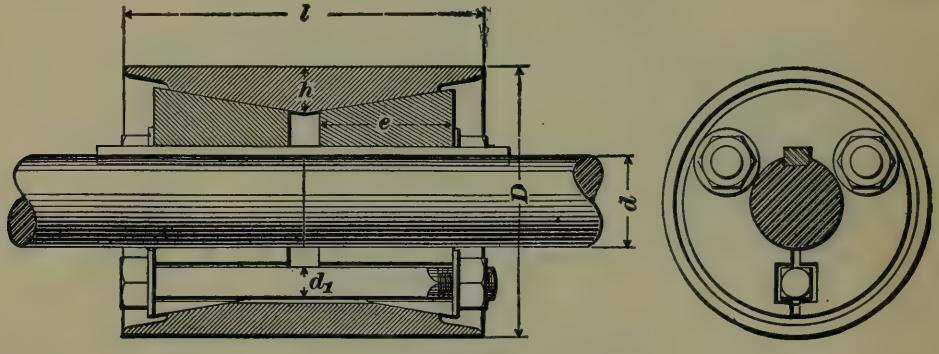

FIG. 675.

which is cylindrical externally, but has the form of a double truncated cone on the inside. Within the muff are placed two slotted sleeves, which are turned on the outside to fit the muff, and also bored out to fit the shaft. These sleeves are pulled together by three bolts, and as they are drawn farther into the muff, they grip it and the shafts firmly.

The bolt holes pass through both the sleeves and muff, and are square in cross-section. The friction between the sleeves and shaft is generally sufficient to prevent slipping, but to be on the safe side, the sleeves are usually keyed to the shaft. The key should have no taper, and fit at the sides only; its proportions may be obtained by formula **233.**

The other proportions may be taken as follows:

d = diameter of shaft;

$$\left.\begin{aligned} l &= 4d; \quad d_1 = \tfrac{1}{3}d; \\ D &= 3d; \quad e = 1\tfrac{1}{2}d; \\ h &= \tfrac{1}{2}d. \end{aligned}\right\} \qquad \textbf{(261.)}$$

The conical sleeves may be tapered 4 inches per foot of length. In putting up lines of shafting, the couplings should be placed, if possible, near bearings, and on the side of the bearing farthest from the driving point.

2000. Universal Joints, or Flexible Couplings.—The principal forms of these joints have already been described in Arts. **1458, 1459,** and **1460.**

In Fig. 676 is shown a common form of these joints which, when constructed of wrought iron, may have the following proportions:

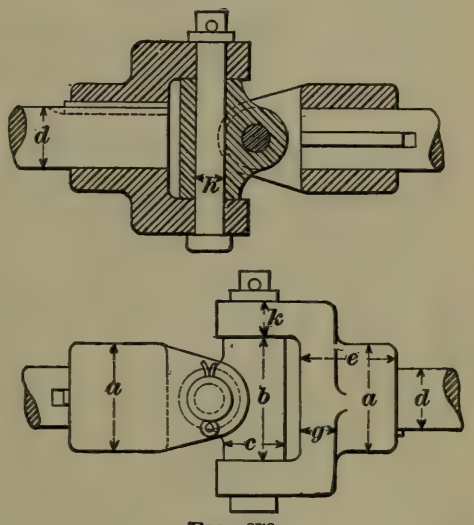

FIG. 676.

$$\left.\begin{array}{ll} d = \text{diameter of shaft}; & \\ a = 1.8\ d; & e = 1.6\ d; \\ b = 2\ d; & g = .6\ d; \\ c = d; & h = .5\ d; \\ & k = .6\ d. \end{array}\right\} \quad (262.)$$

2001. Loose Couplings.—These couplings are used

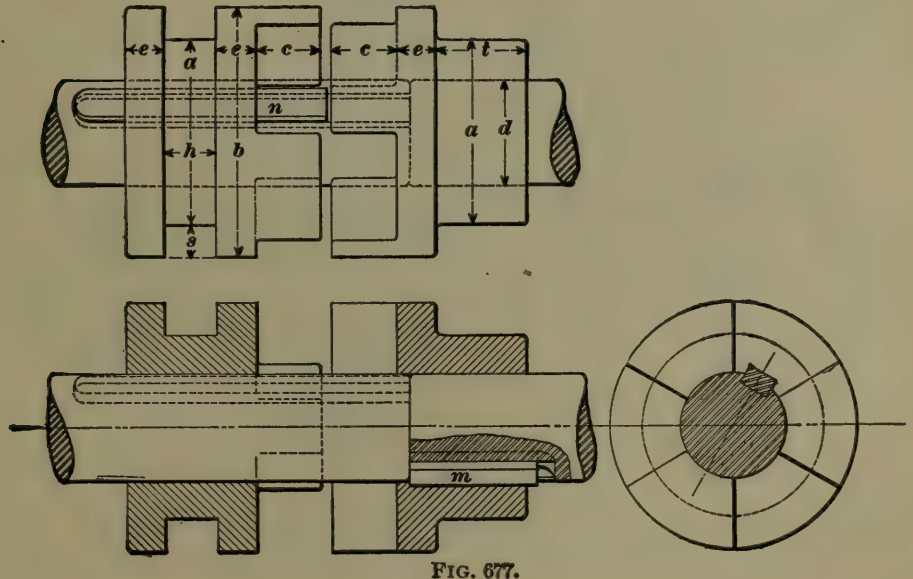

FIG. 677.

when the shafts are to be alternately connected and disconnected. For large slow-moving shafts, the *claw coupling* shown in Fig. 677 may be used. This coupling somewhat resembles the flange coupling, Fig. 673, except that the flanges, instead of being bolted together, are provided with a set of lugs *c* which fit into each other. One flange is permanently fastened to the shaft by a sunk key *m*, while the other is fastened to its shaft by a feather key *n*, and may be moved back and forth, thus throwing the coupling, or clutch, in or out of gear. The movement of the clutch is effected by a forked lever fitting into the recess *h*.

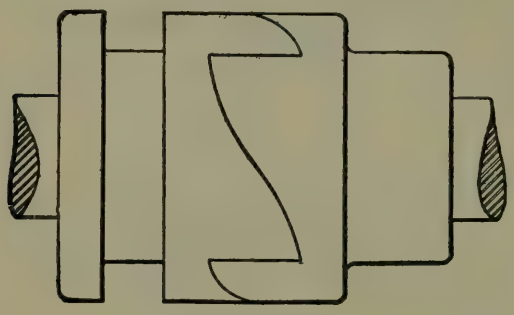

FIG. 678.

The lugs or claws may be given in the form shown in Fig. 678, in which case the couplings are more easily put in gear, but will drive in only one direction.

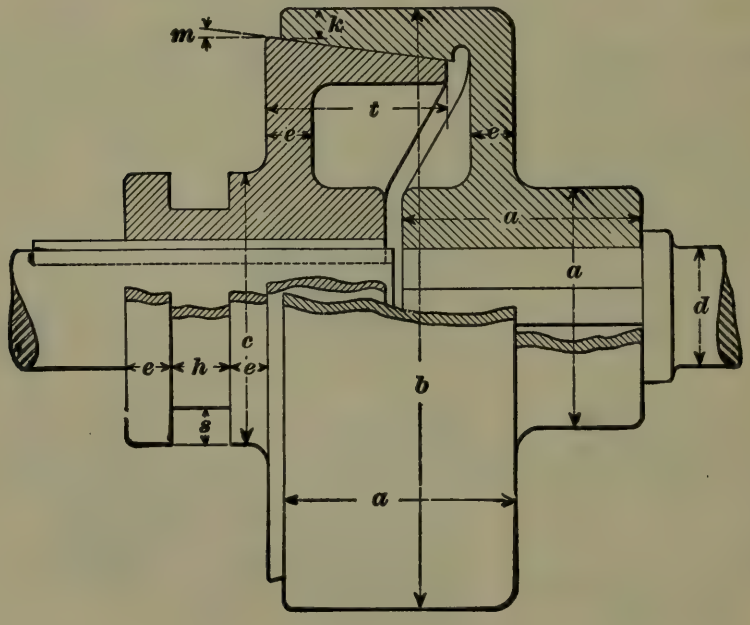

FIG. 679.

Cast-iron claw couplings may have the following proportions:

d = diameter of shaft;

$$\left.\begin{array}{ll} a = 1\frac{3}{4}\,d; & e = \frac{3}{8}\,d; \\ b = 2\frac{3}{8}\,d; & h = \frac{1}{2}\,d; \\ c = \frac{5}{8}\,d; & s = \frac{5}{16}\,d; \\ & t = \frac{7}{8}\,d. \end{array}\right\} \quad \textbf{(263.)}$$

2002. Friction couplings, or **clutches,** are used as loose or disengaging couplings on shafts running at high speeds. They are often used to couple wheels or pulleys to shafts. The form shown in Fig. 679 is simple in construction, but it is open to the objection that it is hard to put in gear. Besides, the horizontal component of the pressure between the conical surfaces causes an end thrust on the shaft.

The average diameter of the conical part may be from 4 to 8 times the shaft diameter, according to the amount of power to be transmitted. The angle m of the cone may be from 4° to 10°. The other proportions are as follows:

d = diameter of shaft;

$$\left.\begin{array}{ll} a = 2\,d; & e = \frac{3}{8}\,d; \\ b = 4 \text{ to } 8\,d; & h = \frac{1}{2}\,d; \\ c = 2\frac{1}{4}\,d; & s = \frac{5}{16}\,d; \\ t = 1\frac{1}{2}\,d; & k = \frac{1}{4}\,d. \end{array}\right\} \quad \textbf{(264.)}$$

A better form of friction clutch is shown in Fig. 680. The shaft n carries a flange or cylinder A, and the shaft m

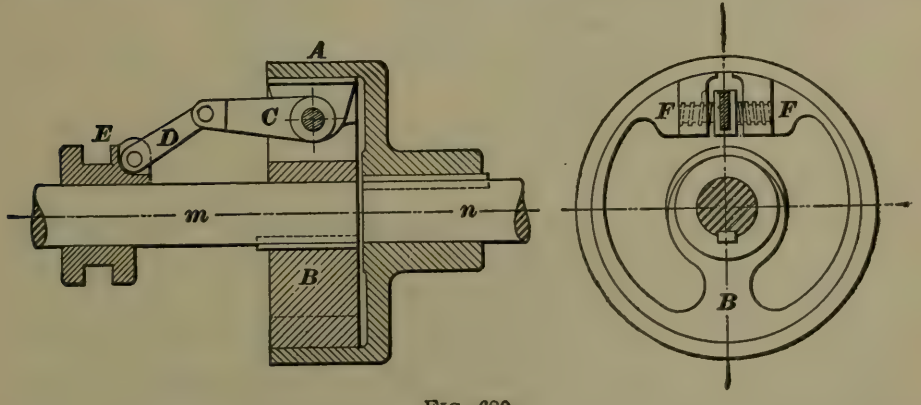

FIG. 680.

has keyed to it a ring B. The ring is split and fits inside

the flange or cylinder A. The split ends are connected by a screw with right and left hand threads. The screw is turned by the lever C, which is connected by the link D to the sleeve E. When the sleeve is pushed towards the clutch, the rotation of the screw throws the ends F, F of the ring B apart, and thereby causes the ring B to grip the flange A tightly. A clutch of this form is easy to operate, and produces no end thrust on the shaft.

Another form of clutch differs from the preceding in having the friction band B on the outside of the flange. The principal proportions of these clutches are about the same as given above for Fig. 679.

2003. Shifting Gear for Clutches.—A clutch is usually put in or out of gear by means of a forked lever, the

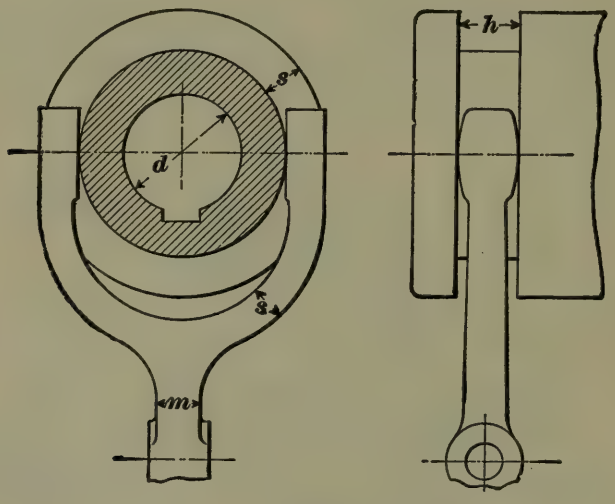

FIG. 681.

prongs of which fit into the groove cut in the sliding part of the clutch. The lever is usually worked by hand, though for large clutches the end of the lever may be moved by a screw and hand wheel. The ordinary design of the forked end of the lever is shown in Fig. 681. To increase the wearing surface a strap may be used, as shown in Fig. 682. The strap completely fills the groove, and is often made of brass.

The dimensions h and s are the width and depth of the

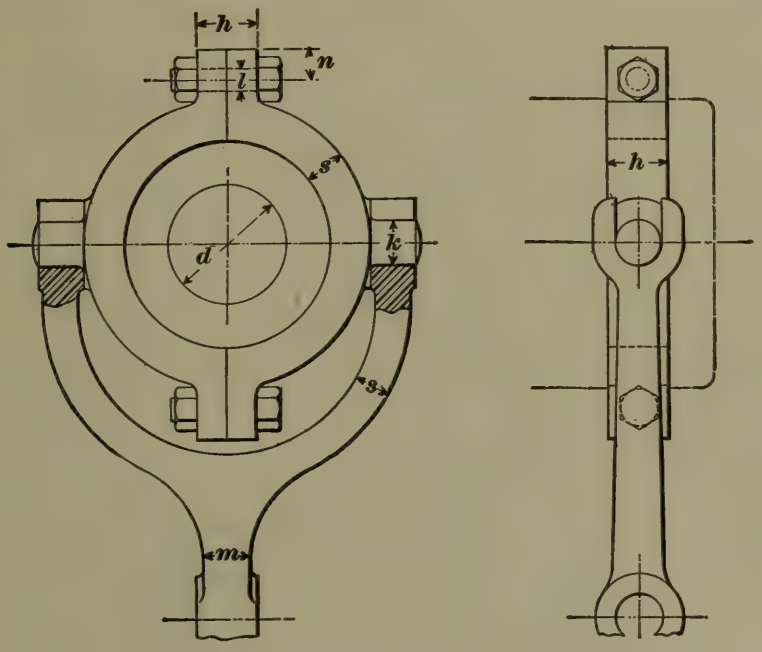

FIG. 682.

groove, respectively, which are to be determined by the rules already given for the proportions of the clutch.

Proportions for clutch lever:

d = diameter of shaft;

$$\left.\begin{array}{ll} h = \frac{1}{2}d; & s = \frac{5}{16}d; \\ k = \frac{3}{8}d; & m = \frac{3}{8}d; \\ l = \frac{3}{16}d; & n = \frac{1}{4}d. \end{array}\right\} \quad \textbf{(265.)}$$

MACHINE DESIGN.

(CONTINUED.)

BEARINGS.

2004. Solid Journal Bearings.—The simplest form of bearing for a journal is merely a hole in the frame which supports the rotating piece. Such a bearing is shown in Fig. 683. Motion endwise is prevented by two collars,

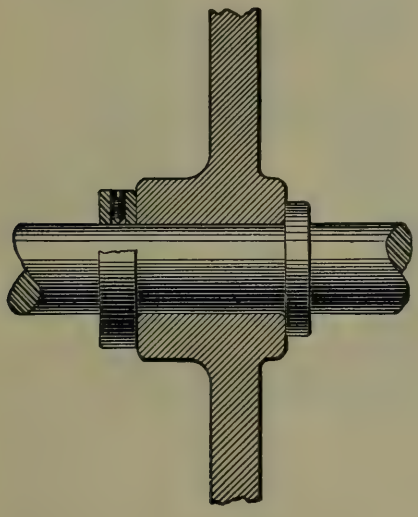

FIG. 683.

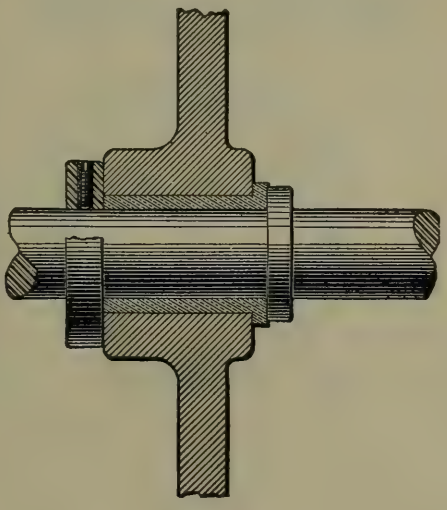

FIG. 684.

one of which may be forged on the shaft, and the other made separately and held in place by a set-screw or pin. A boss is cast upon the frame, as shown in the figure, in order to give the journal the necessary length and bearing area.

Such a bearing has no means of adjusting to take up the wear; for this reason it is better to use the form of solid bearing shown in Fig. 684. Here the hole is bored out larger than the journal, and lined with a bushing made of

For notice of copyright, see page immediately following the title page.

brass or other metal. The wear thus comes on the bushing, which can easily be replaced.

2005. Divided Bearings.—In many cases solid bearings are undesirable, and in others it will be impossible to use them. The bearing is then divided, and the parts held

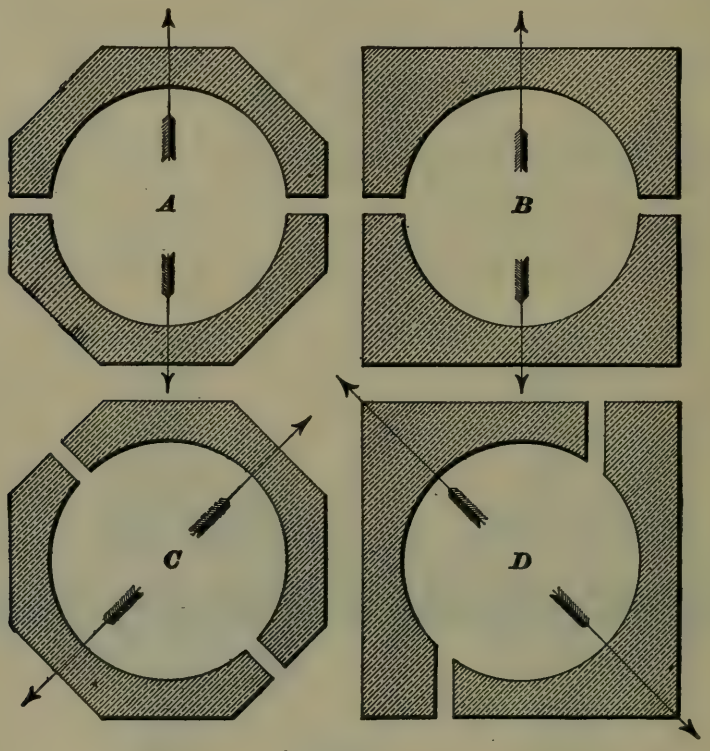

FIG. 685.

together by bolts. When this is done, the parts of the bushing are called *seats* or *steps*. The division of the bearing permits its adjustment for wear.

The load on a bearing usually acts constantly in one direction, and the bearing should be divided so that the line of division is perpendicular, or nearly so, to the direction of the load. Fig. 685 shows various methods of dividing the seats. In *A* and *B* the direction of the load is vertical; consequently, the seats are divided horizontally.

Naturally, the wear will come on the top and bottom of the seats, and the hole will become oval, with the long

diameter vertical. The seats are then screwed closer together until the hole regains its original circular form. The necessity of making the division perpendicular to the direction of the load is thus apparent. In *C* the direction of the load is oblique, and the adjustment perpendicular to it; in *D* the direction of the load is oblique also, but the seats are divided to allow a horizontal adjustment.

A simple form of divided bearing is shown in Fig. 686. It is of cast iron, with no separate seats, but with means of

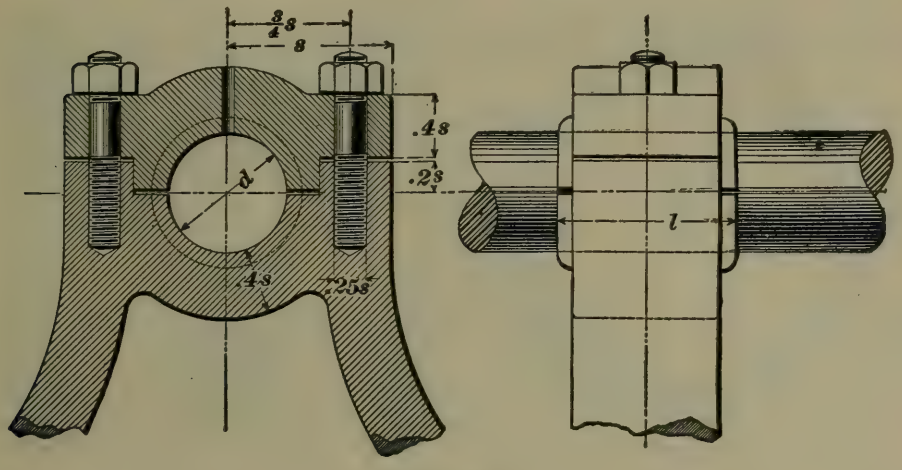

FIG. 686.

adjustment. The bearing forms part of the frame of the machine. This form of bearing is used only on cheap work. Sometimes, however, it has a recess, or groove, cast in it, which is filled with babbitt metal, upon which the journal rests.

The proportional unit for this bearing is

$$s = 1.15\ d + .4.$$

The dimensions l and d of the bearing are the same as those for a journal; the other proportions are given in terms of the unit s, and are shown in the figure.

2006. Seats, or Steps.—Carefully made bearings are always lined with so-called **seats**, or **steps**, which are made of brass, gun-metal, phosphor-bronze, white metal or babbitt metal, although other alloys are also used. When

made of a metal resembling brass in color, seats are often called **brasses.** The seats when worn out may be easily replaced, and being made of softer material than the journal, the latter wears but very little.

An ordinary form of seat is shown in Fig. 687. A part of the seat at each end is made octagonal in cross-section. This part is fitted into an octagonal recess in the **pillow-block,** or **pedestal,** which holds it, and the seats are thus prevented from turning. Sometimes the octagonal parts

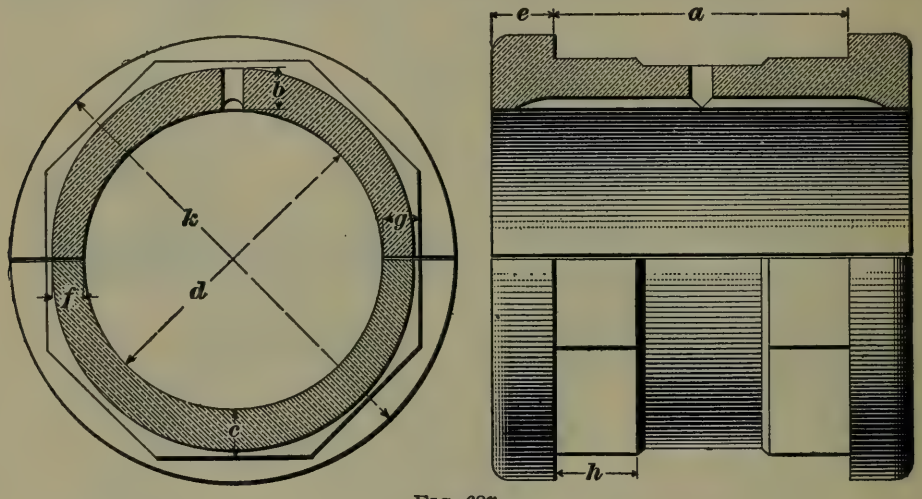

FIG. 687.

are dispensed with, and the seats are turned in a lathe, the pillow-blocks, or pedestals, being bored to receive them. It is then necessary to provide the seats with a lug, or pin, to prevent them from turning.

These seats may be made according to the following proportions, in which d, the diameter of the journal, is the proportional unit:

$b = \frac{1}{10}d + \frac{3}{16}''$.
$c = \frac{1}{8}d + \frac{3}{16}''$.
$e = \frac{1}{8}d + \frac{1}{8}''$.
$f = \frac{1}{10}d$.
$g = \frac{1}{8}d$.
$h = \frac{1}{4}d$.
$k = 1\frac{1}{2}d$.
d = diameter of journal.

The dimension a should be made to fit the pillow-block for which the seats are intended.

Seats should be well supplied with grooves and channels, so that oil may be conducted to every part of the journal.

It is a good plan to place a groove parallel to the axis of the journal in the upper half of the seat, where it may be in direct communication with the oil holes. Then, the advancing side of the journal will always carry a thin film of oil along with it. The grooves may be from $\frac{1}{8}''$ to $\frac{1}{2}''$ wide, according to the size of the journal.

2007. Lining for Seats.—Seats for large bearings are often lined with babbitt metal, or antifriction metal. It has been found by experience that a bearing will run

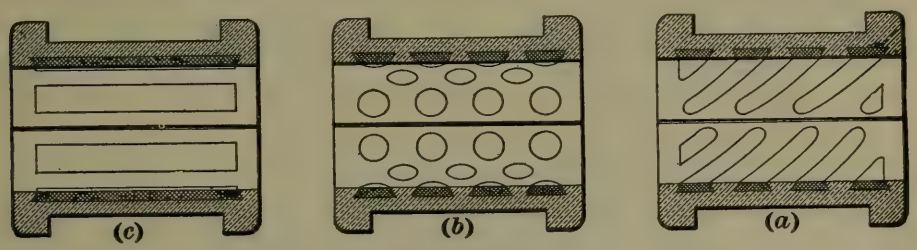

FIG. 688.

cooler when so lined, probably because the babbitt metal, being softer, accommodates itself to the journal more readily than the more rigid gun-metal.

Some of the common methods of lining the seats are shown in Fig. 688.

At (*a*), the babbitt metal is shown cast into shallow helical grooves; at (*b*), into a series of round holes, and at (*c*), into shallow rectangular grooves. Consequently, the journal rests partly on the brass and partly on the babbitt metal.

In cheap work, the seats are frequently made entirely of babbitt metal. A mandrel, the exact size of the journal, is placed inside the bearing, and the melted babbitt metal is poured around it. In better work, a smaller mandrel is used. After the metal hardens it is hammered in; the bearing is then bored out to the exact size of the journal.

PEDESTALS.

2008. The names **pedestal, pillow-block, bearing,** and **journal-box,** are used indiscriminately. They are all a form of bearing, and mean a support for a rotating piece.

2009. A form of journal-box frequently used for small shafts is shown in Fig. 689. It consists of two parts: (1) the box which supports the journal, and (2) the cap which is screwed down to the box. In this journal-box the seats are of babbitt, or, as it is commonly expressed, the box is babbitted. The cap is held in place by what are called cap-screws—an invariable method in small pedestals.

2010. The proportioning of a pedestal is largely a matter of experience. Few or none of the parts are calculated for strength.

All the proportions of the pedestals which follow are based on the diameter of the journal d as the unit; the length of the seats is the same as that of the journal.

For the journal-box shown in Fig. 689, the following proportions may be used for sizes of journals from $\frac{1}{2}''$ to $2''$ diameter, inclusive. The diameter of shaft d = the unit.

$a = 2.25\,d.$	$l = .08\,d.$
$b = 1.75\,d.$	$m = .25\,d + .1875''.$
$c = d.$	$n = .5\,d.$
$e = .375\,d.$	$o = .625''$ (constant).
$f = .08\,d + .0625''.$	$p = 1.5\,d.$
$g = 1.75\,d.$	$q = 1.333\,d.$
$h = 2.45\,d.$	$r = .08\,d.$
$i = .3\,d.$	$s = .125''$ (constant).
$j = .33\,d.$	$t = .16\,d.$
$k = .25\,d + .125''.$	$u = 1.333\,d.$
	$v = .125\,d.$

2011. In Fig. 690 is shown a common form of pedestal which is used for somewhat larger journals than the one shown in Fig. 689.

It consists of (1) a foundation plate which is bolted to the foundation on which the pedestal rests; the plate is essential when the pedestal rests on brickwork or masonry, but may be dispensed with when the pedestal rests on the frame of the machine; (2) the block which carries the seats and supports the journal; (3) the cap which is screwed down over

the seats. The bolt holes in both foundation plate and block are oblong, so that the pedestal may be readily adjusted.

The following proportions may be used for this kind of pedestal, with journals from 2″ to 6″, inclusive. An oil cup

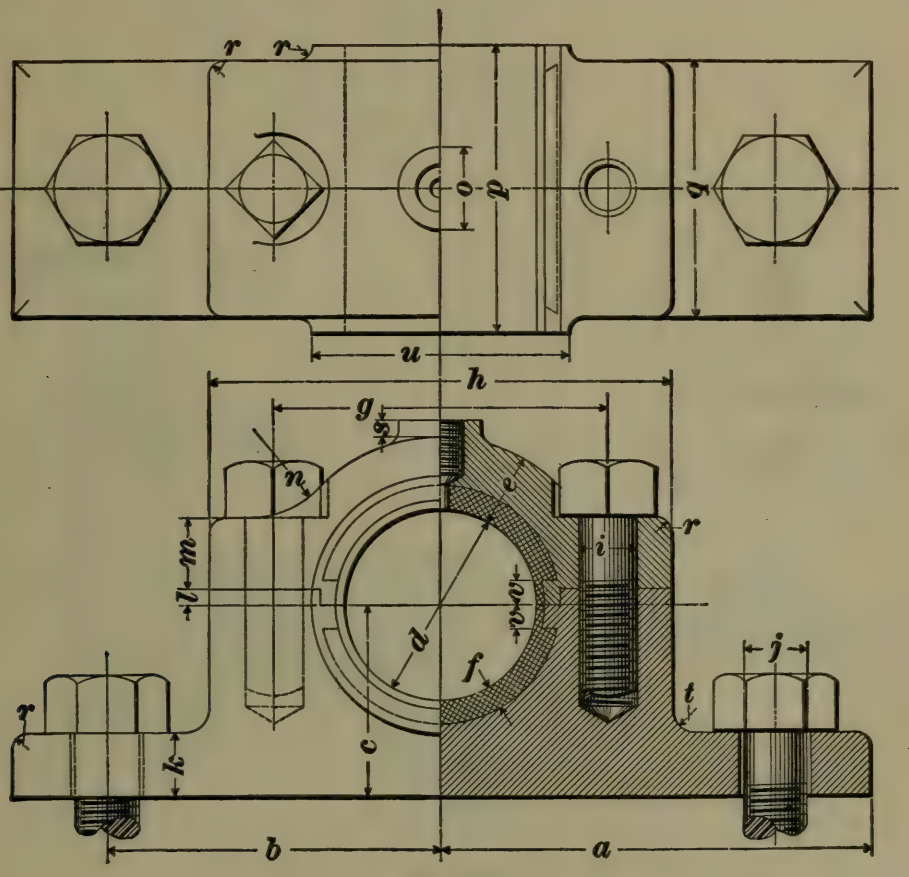

FIG. 689.

having a $\frac{1}{4}$″ pipe tap shank may be used on pedestals for journals having diameters from 3″ to 4″, and $\frac{3}{8}$″ pipe tap shank for larger sizes up to 6″ diameter.

NOTE.—The shanks of oil cups and grease cups bought in the market are made with a $\frac{1}{8}$″, $\frac{1}{4}$″, $\frac{3}{8}$″, or $\frac{1}{2}$″ pipe thread. The amount of oil or grease the cup holds when filled is usually expressed in ounces.

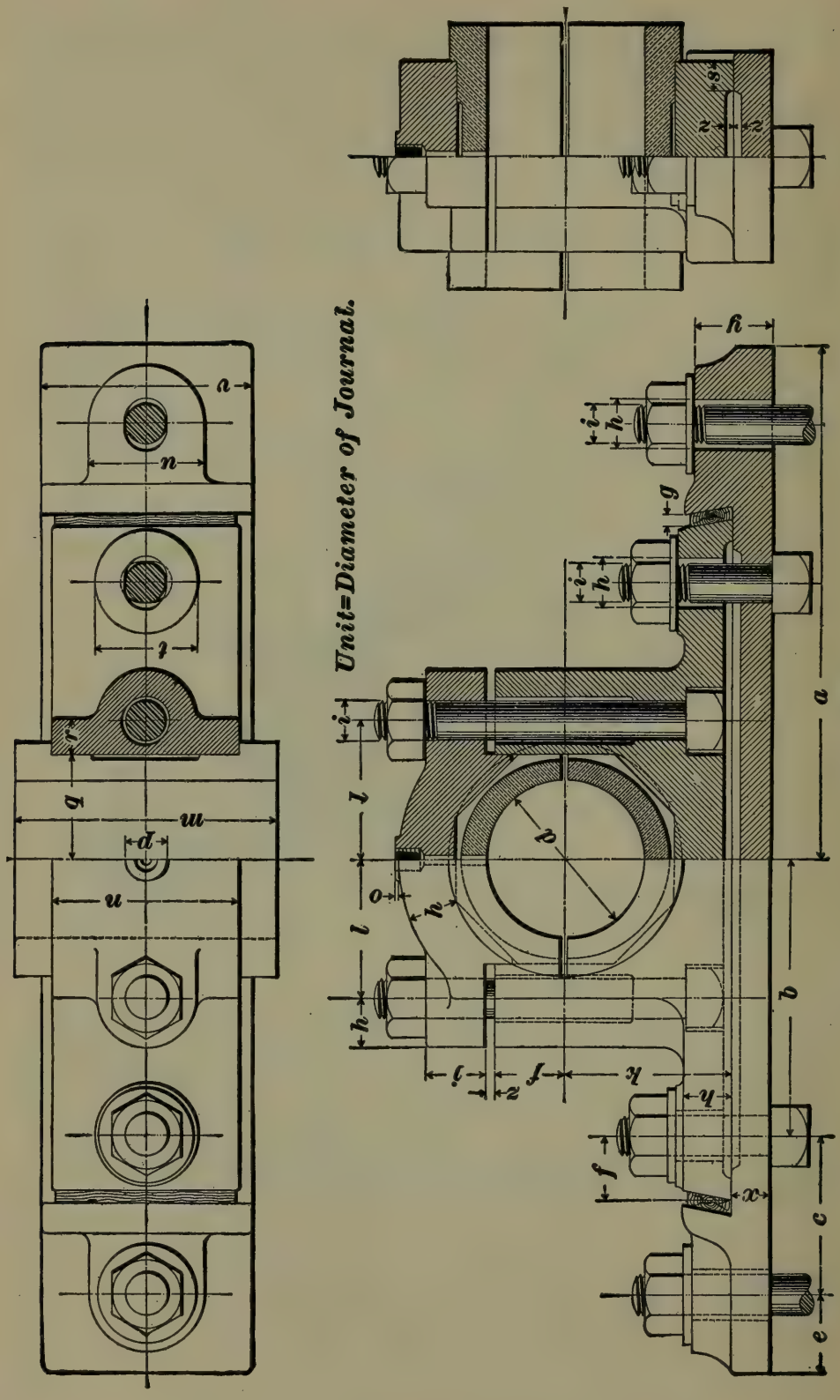

FIG. 690.

The diameter of journal d = the unit;

$a = 3.25\,d.$
$b = 1.75\,d.$
$c = d.$
$e = .5\,d.$
$f = .4375\,d.$
$g = .09\,d.$
$h = .3125\,d.$
$i = .25\,d.$
$j = .375\,d.$
$k = 1.0625\,d.$
$l = .875\,d.$
$m = 1.75\,d.$
$n = 1.25\,d.$
$o = .125''$ (constant).
$p = .875''$ (constant).
$q = .625\,d.$
$r = .25\,d.$
$s = .1875\,d.$
$t = .65\,d.$
$u = .75\,d.$
$v = 1.375\,d.$
$x = .25\,d.$
$y = .5\,d.$
$z = .0625\,d.$

2012. Crank-Shaft Pedestals. — The load on a crank-shaft bearing is due partly to the weight of the shaft and fly-wheel, and partly to the alternate push and pull of the connecting-rod. The direction of the resultant of these two forces is, therefore, more or less oblique, and, consequently, the pedestal is often divided obliquely.

2013. A pedestal of this kind is shown in Fig. 691, which may be proportioned by taking the diameter d of the journal as the unit, and using the following proportions:

The line $A\ B$ is at an angle of 45° to the base line.

This pedestal, as shown, is babbitted. The babbitt is held

in place and prevented from turning with the journal by providing the surfaces with which the babbitt comes in contact

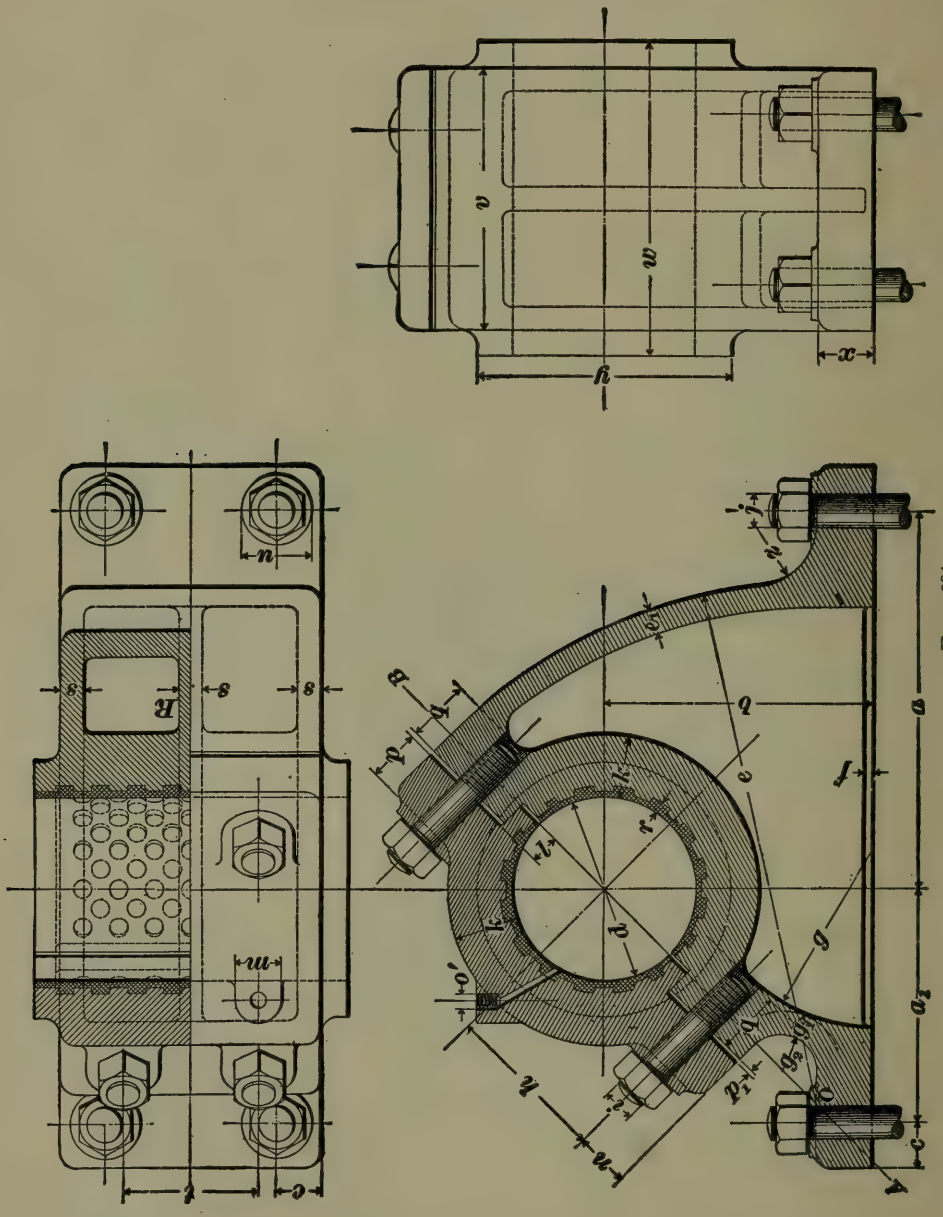

FIG. 691.

with round projections as shown. The projections are about one inch in diameter for the larger sizes of pedestals.

$a = 2d + 1''.$
$a_1 = 1.2d + 1''.$
$b = 1.5d.$
$c = .22d + .5''.$
$e_1 = .1d + .25''.$
$f = .5''$ (constant).
$g_1 = .1d + .25''.$
$h = .9d.$
$i = .15d + .25''.$
$j = .15d + .375''.$
$k = .3d + .625''.$
$l = .1d + .375''.$
$m = .25d.$
$n = .3d.$
$p = .25d + .25''.$
$p_1 = .04d.$
$q = .35d.$
$r = .02d + .3125''.$
$s = .1d + .25''.$
$t = .75d.$
$u = .27d + 1.125''.$
$v = 1.45d.$
$w = 1.75d.$
$x = .25d + .625''.$
$y = 1.3d + 1''.$
$z = .25d + 1''.$

To find the radius e draw a line parallel to the base line, and at a distance x above the base line. The point of intersection O of this line with the line $A\ B$ is the center of the arc having the radius e. The radius g_2 is found by trial. The center of the arc must lie on the line $A\ B$. With a radius $g_2 + g_1$ describe an arc from the same center. Draw a line parallel to the face of the bearing at a distance from it determined by q. The radius g is to be found by trial, the center being on the base line, and the arc tangent to the line determined by q and to the arc determined by $g_2 + g_1$. The rib R may be used on all pedestals above 6″ diameter of journal. o' may be tapped with a $\frac{1}{4}''$ pipe tap for 3″ to 4″

journal, $\frac{3}{8}''$ pipe tap up to 6″ journal, $\frac{1}{2}''$ up to 9″ journal, and $\frac{3}{4}''$ for all sizes above 9″.

Two oil cups may be used on all bearings above 8″ diameter of journal. This style of pedestal may be used for journals from 3″ up to 15″ diameter, inclusive.

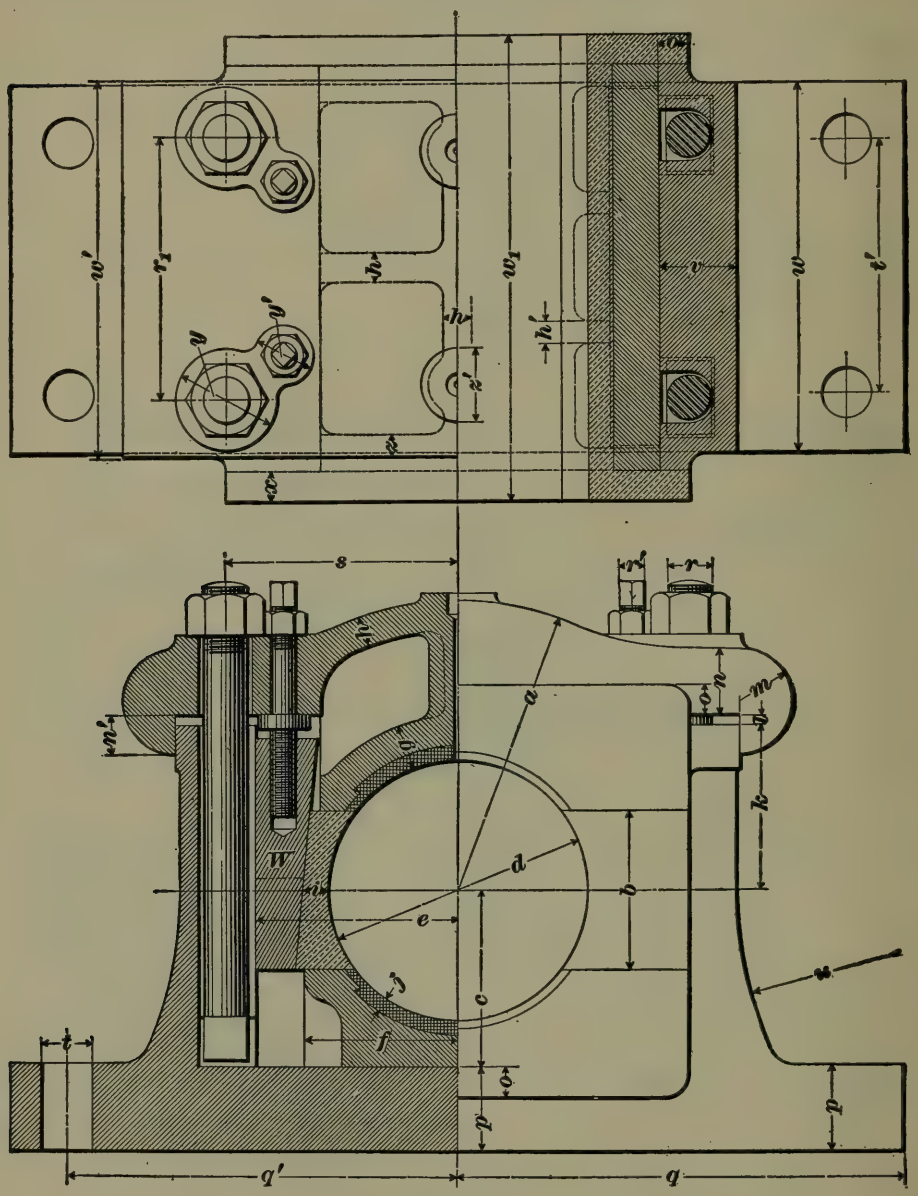

FIG. 692.

2014. Fig. 692 shows a pedestal suitable for the crankshaft of a horizontal engine with journals from 8″ to 20″ in

diameter. The block may be complete in itself, as shown in the figure, but more often it forms part of the engine bed.

The seats are in three parts, and may be adjusted horizontally by means of the wedges *W*. The lower seat may be raised by placing packing pieces under it. To obtain its dimensions, use the following proportions, which are based on the unit d = the diameter of the crank-shaft journal:

$a = d + 1''$.
$b = .5\,d + 1''$.
$c = .66\,d$.
$e = .825\,d - .25''$
$f = .6\,d$.
$g = .1\,d + .5625''$.
$h = .1\,d + .25''$.
$h' = .08\,d$.
$i = .11\,d$.
$j = .625''$ (constant).
$k = .5\,d + 1.25''$.
$l = .375''$ (constant).
$m = .175\,d + .3125''$.
$n = .25\,d + .25''$.
$n' = .1\,d + .375''$.
$o = 1''$ (constant).
$p = .25\,d + .625''$.
$q = 1.75\,d$.
$q' = 1.5\,d$.
$r = .15\,d$.
$r' = .1\,d$.
$r_1 = d$.
$s = .9\,d$.
$t = .15\,d + .375''$.
$t' = .9\,d$.
$u = 1.5\,d$.
$v = .25\,d + .375''$.
$w = 1.45\,d$.
$w' = 1.47\,d$.
$w_1 = 1.75\,d$.
$x = .1\,d$.
$y = .3\,d + .75''$.
$y' = .2\,d + .5''$.
$z = .09\,d$.
$z' = 2.5''$ (constant).

Taper of adjusting wedge, 1 : 10.

Further details of the bottom seat and the cap are shown in Fig. 693, in which the unit is the same as in Fig. 692, and the proportions are as follows:

$a = 1''$ (constant).
$b = 1.65\,d - .5''$.
$c = .08\,d$.
$d = .1\,d$.

2015. The foundation, or bed casting, is shown in Fig. 694, and has dimensions to suit the pedestal shown in Fig. 692. Its proportions are as follows, the diameter of the crank-shaft journal d being taken as the unit:

$a = 2.45\,d + 7.25''$.
$b = 2.3\,d + 5.25''$.
$c = .5\,d + 3.5''$.
$e = 3.5\,d + 2''$.
$f = .25\,d + .5''$.
$g = .25\,d + 1.75''$.
$h = .25\,d + 2.25''$.
$n = 1.55\,d + 2.5''$.
$o = .25\,d + 2''$.
$o' = .25\,d + .5''$.
$o'' = .5\,d + 4.5''$.
$p = .08\,d$.
$q = 1.5\,d$.
$r = .15\,d + .375''$.

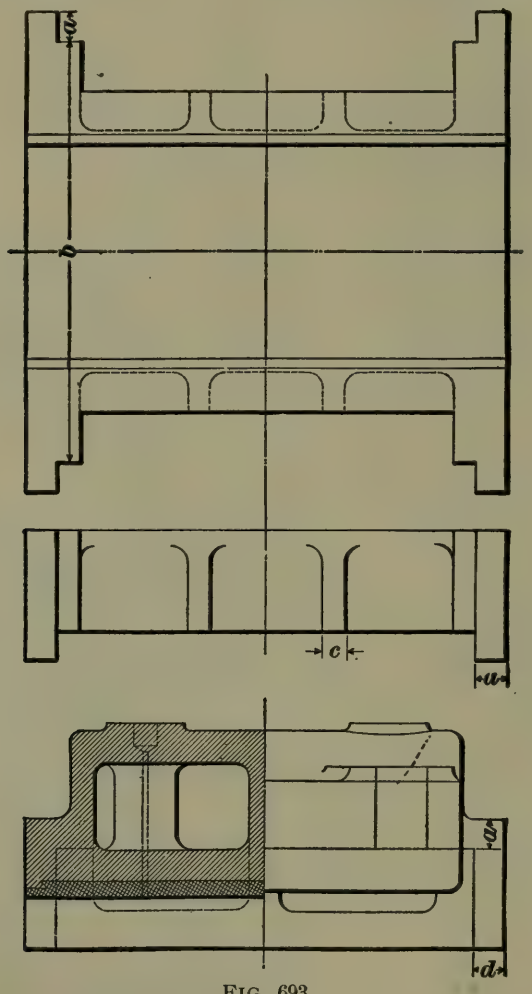

FIG. 693.

$i = .05\,d + .5''$.
$j = .05\,d + 1.125''$.
$k = .05\,d + .75''$.
$l = .25\,d + .75''$.
$m = .4\,d$.
$m' = .6\,d$.
$s = .15\,d + .375''$.
$t = .9\,d$.
$u = .15\,d + .875''$.
$v = .2\,d$.
$w = 1.5\,d$.
$x = 1.65\,d$.

2016. Ball-and-Socket Bearings.—These bearings, now largely used in the United States, were first introduced by William Sellers & Co., of Philadelphia. They have very long steps made of *cast iron* bored to fit the journal. In some cases, however, the steps are cast with a recess in which a babbitt lining is poured to form a bearing surface for the journal. The steps have a spherical enlargement at the center, which fits into corresponding hollows in the block and cap, thus making a ball-and-socket joint, which leaves

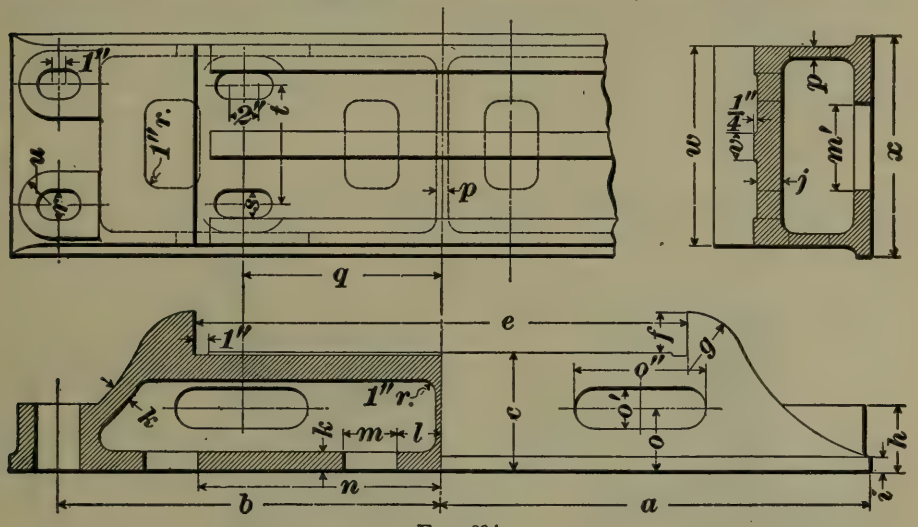

FIG. 694.

the bearing free to move slightly in any direction to conform to an inequality or want of alinement in the shaft. When rigid bearings are used, they must necessarily be short on account of unavoidable deflections of the shaft due to belt pull, thrust of gearing, etc. Pivoted bearings, on the contrary, by reason of their flexibility, may be made long, thereby giving a large wearing surface and increased durability.

2017. Fig. 695 shows a pedestal with ball-and-socket bearing. The steps are of cast iron, and have a length of four times the diameter of the journal.

Ordinarily the journal is lubricated through the oil hole in the center of the cap, but the upper step also has two cups, filled with a mixture of tallow and oil which melts at about 100° F. If the bearing becomes heated this mixture melts, and thus helps in the lubrication.

The dimensions of this bearing are obtained from the following proportions, which are based on the diameter of the journal d as the unit:

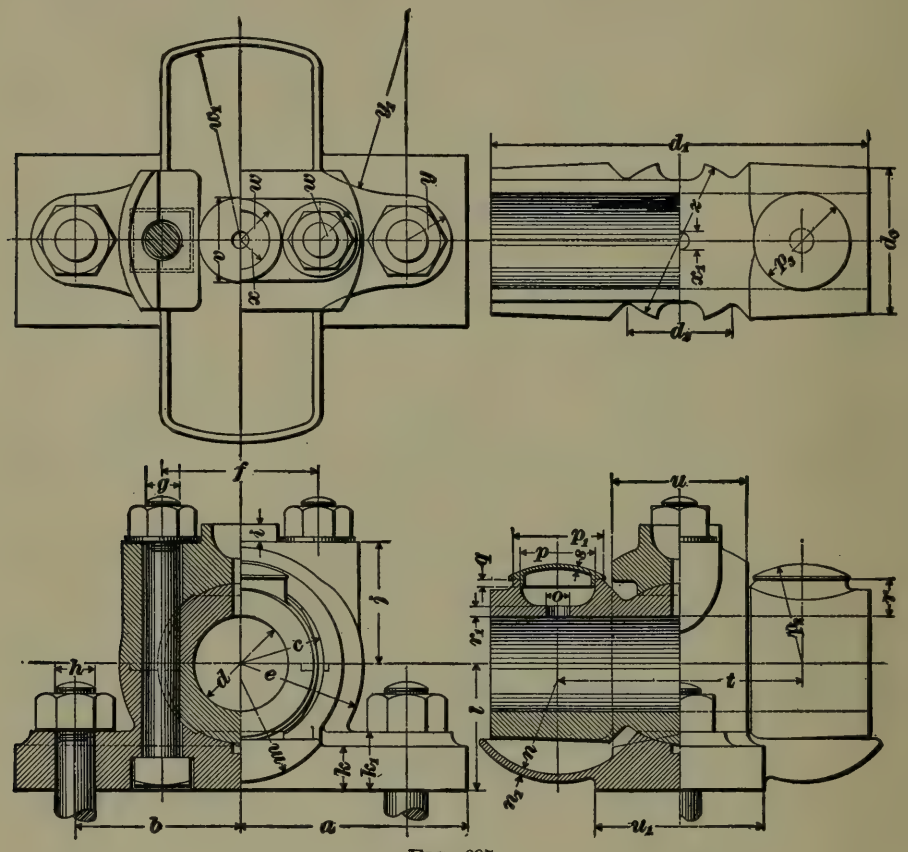

FIG. 695.

$a = 2.375\,d.$
$b = 1.75\,d.$
$c = .875\,d.$
$d_1 = 4\,d.$
$d_2 = 1.1\,d.$
$d_3 = 1.25\,d + .5''.$
$e = 1.3\,d.$
$f = 1.65\,d.$
$g = .2\,d + .25''.$
$h = .2\,d + .375''.$
$i = .1875\,d.$
$j = 1.27\,d.$
$k = .3\,d + .25''.$
$k_1 = .4\,d + .375''.$
$l = 1.33\,d.$
$m = d + .125''.$
$n = d.$
$n_1 = .125''$ (constant).
$o = .25\,d.$
$p = .8\,d.$
$p_1 = .95\,d.$
$p_2 = d.$
$p_3 = d.$
$q = .07\,d.$
$r = .4\,d.$
$r_1 = .1\,d.$

$s = .0625''$ (constant).
$t = 2.5626\,d$.
$u = 1.45\,d$.
$u_1 = 1.8\,d$.
$v = .875\,d$.
$w = .2\,d + .375''$.
$w_1 = 2.06\,d$.
$x = .18\,d + 2.5''$.
$x_1 = .1875\,d$.
$y = .25\,d + .375''$.
y_1 to be found by trial.
$z = 1.5\,d + .3125''$.

WALL BRACKETS AND HANGERS.

2018. Wall Brackets, or Post Hangers.—A shaft must sometimes be supported by a bearing fixed to a wall or pillar. In such a case the bearing is generally supported by a **wall bracket.** It will readily be seen that the bracket is a cantilever with practically a uniform load, due to its own weight, and a concentrated load, due to the weight of the shaft; hence, the bending moment diagram resembles that shown in Fig. 332, Art. **1391.**

Now, in order that a cantilever should be equally strong at all sections, the resisting moment, $\frac{SI}{c}$, of that section should be proportional to the bending moment at that section. Suppose the bracket in question to be a plate of a constant thickness b. Then, at any section, the bending moment $M = \frac{SI}{c} = \frac{S\frac{1}{12}bh^3}{\frac{1}{2}h} = \frac{1}{6}Sbh^2$.

Since $\frac{1}{6}\,S\,b$ remains constant for all sections, the h^2 is proportional to the bending moment; or, in other words, the height of a cantilever at any section should be proportional to the square root of the bending moment at that section. It can be shown mathematically that, supposing the cantilever to have a constant width, it should have a parabolic form when the load is concentrated at the end, and it should have a triangular form when the load is uniformly distributed. In practice, a bracket or other machine part of the cantilever class is given a form which is often neither exactly parabolic nor triangular, but approximates closely to one or the other, according to the taste and judgment of the designer.

2019. A good design for a wall bracket is shown in Fig. 696. The bearing proper resembles that of the pedestal, Fig. 695. The spherical enlargement at the center

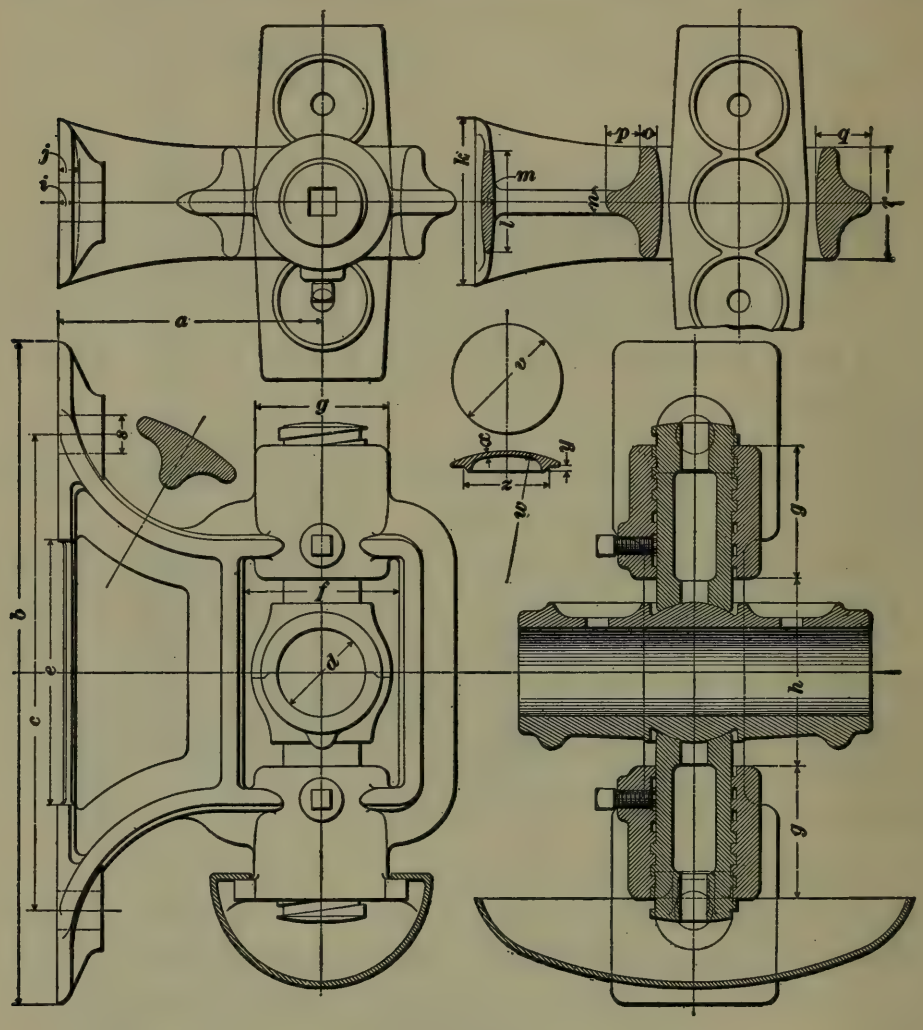

FIG. 696.

of the steps is held between the ends of two hollow cast-iron plugs, which are threaded at their outer ends, and screw into bosses cast on the bracket.

The bearing may be raised or lowered by screwing the plugs up or down. In order to turn the plugs the hole at the end is made square to receive a key. When the plugs are in the desired position they are locked by the set-screws.

The length of the bearing is 4 times the shaft diameter; the other dimensions are to be obtained from the figure and by the following proportions:

Diameter of shaft d = unit;

$a = 3\,d.$
$b = 7.5\,d.$
$c = 5.375\,d.$
$e = 3\,d.$
$f = 1.75\,d.$
$g = 1.5\,d.$
$h = 2.125\,d.$
$i = .16\,d.$
$j = .25\,d.$
$k = 1.875\,d.$
$l = 1.125\,d.$
$m = .125\,d.$
$n = .25\,d.$
$o = .1875\,d.$
$p = .375\,d.$
$q = .625\,d.$
$r = 1.25\,d.$
$s = .25\,d + .5''.$

Proportions of oil or grease cup covers:

$v = 1.125\,d + .1875''.$
$w = 1.5\,d.$
$x = .125''$ (constant).
$y = .0625\,d.$
$z = d - .0625''.$

The proportions of boxes, bosses, plugs, drip pans, etc., are to be made the same as those of the shaft hanger shown in Fig. 697.

2020. Hangers.—A hanger is used when a shaft bearing is to be suspended from the ceiling. Fig. 697 shows a form of a hanger made by a leading manufacturing company.

The bearing is the same as that of the wall bracket, Fig. 696. The frame of the hanger is divided, and the parts connected by bolts. With such a form the shaft may be more easily removed than when the hanger frame is a solid piece.

The units for determining the leading dimensions of a shaft hanger are the diameter d of the shaft and the drop D of the hanger.

The following proportions are suitable for shafts ranging from $1\frac{1}{2}''$ up to $4\frac{1}{2}''$ in diameter:

$A = 6\,d + .45\,D.$
$A_1 = 2\,d + .03\,D.$
$B = 4\,d + .35\,D.$
$C = 2\,d + .3\,D.$
$E = 2\,d + .25\,D.$
$F = .5\,d + .01\,D.$
$F_1 = 1.5\,d + .05\,D.$
$G = 1.25\,d.$

$H = 2\ d.$
$I = .4\ d.$
$J = .125\ d + .01\ D.$
$K = .5\ d + .5''.$
$L = .25\ d + .5''.$
$M = .75\ d + .6875''.$
$N = .25\ d + .375''.$
$O = 1.25\ d.$
$O_1 = .094\ d + .002\ D.$
$P = .375\ d + .008\ D.$
$Q = .375\ d + .008\ D.$
R and R_1 (see note).
$S = .25\ d + .005\ D.$
$S_1 = .125\ d + .003\ D.$
$T = .125\ d + .01\ D.$
$T_1 =$ (see note).
$U = 2\ d.$
$V = .5\ d.$
$W = .75\ d.$
$X = .375\ d.$
$Y = .25\ d + .125''.$
$Z = .625\ d.$
$a = .15\ d + .375''.$
$a_1 = 2.4\ d + .3125''.$
$b = .08\ d.$
$c = .125\ d + .0625''.$
$e = .2\ d.$
$e_1 = .4\ d.$
$e_2 = .2\ d.$
$f = .375\ d + 1''.$
$f_1 = .09\ d + .25''.$
$g = .75\ d.$
$g_1 = 1.3125\ d + .125''.$
$h = 1.25\ d + .1875''.$
$i = .1\ d.$
$j = .25\ d + .25''.$
$j_1 = .125\ d + .0625''.$
$k = 2.2\ d.$
$l = 4\ d.$
$m = 1.4\ d + .375''.$
$n = d.$
$o = .25\ d.$
$o_1 = .0625\ d.$
$p = d.$
$p_1 = .0625\ d.$
$q = .4\ d.$
$q_1 = .15\ d.$
$r = 2.125\ d.$
$s = 1.5\ d.$
$s_1 = .125\ d.$
$t = 2\ d.$
$t_1 = .5\ d.$
$t_2 = d.$
$t_3 = .25\ d.$
$u = .95\ d.$
$u_1 = .85\ d.$
$v = .25\ d + .125''.$
$v_1 = .5\ d.$
$w = d.$
$w_1 = .125''$ (constant).
$x = .25\ d.$
$x_1 = d.$
$x_2 = 4\ d + 2''.$
$y = 1.25\ d.$
$y_1 = .75\ d + .0625''.$
$y_2 = .4\ d + .0625''.$
$z = .06\ d + .25''.$
$z_1 = .12\ d + .75''.$
$z_2 = .3125''$ (constant).

Thread of plugs, .5″ pitch for all sizes.

NOTE.—To find R_1, draw the arc J; also, draw the arc Q tangent to P; then, draw a straight line tangent to these arcs, and R_1 will be

4
3
H
G
I
T
A_1
A
B
C
E
F
J
S_1
S_2
P
R_1
R
Q
1
W
u
u_1
Drop=D
V
U
o_1
d
b
c
N
Z
a
a_1
e_2
f_1
e
e_1

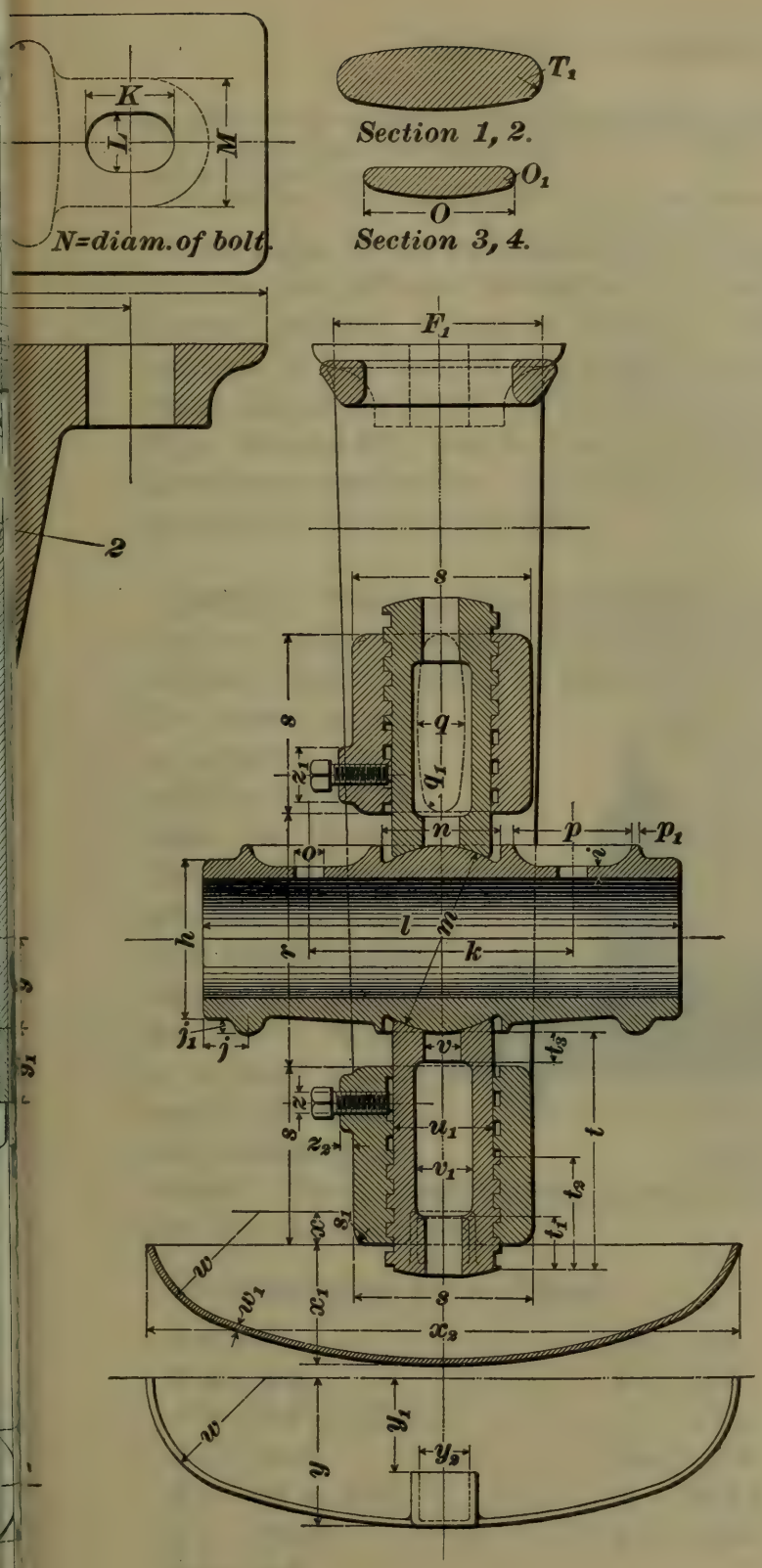
K
L
M
N=diam. of bolt.
T1
Section 1, 2.
O1
O
Section 3, 4.
F1
2
s
q
q1
z1
n
p
p1
o
i
h
l
m
r
k
j1
j
v
b3
z2
u1
v1
t
t2
t1
x
s1
w
w1
x1
x2
y
y1
y2

F[illegible]397.

the distance along the center line determined by B included between this tangent and the upper face of the hanger. Having found R_1, make R equal to it.

The radius T_1 is made equal to $\frac{3}{8}$ the thickness at the middle.

The steps of the ball-and-socket bearings shown in Figs. 695, 696, and 697 are of cast iron, and are bored to fit the journal without lining or brasses. The ball, and the recesses in the ends of the plugs, into which the ball is fitted, should be faced. The screw threads on the plugs, Figs. 696 and 697, may be cast on the plugs or turned, the latter being preferable. It is customary to use two threads per inch for all sizes of plugs.

2021. Pivot or Foot-step Bearings.—These bearings are used to support the ends of vertical shafts. An ordinary pivot bearing is shown in Fig. 698. The end of the pivot rotates on a disk A, which may be of steel, brass, or bronze. The brass bush B prevents the pivot from moving sidewise. The end of the pivot should be of steel, and it may be flat on the end or slightly cup shaped. The proportions are given in terms of the diameter d of the pivot as a unit.

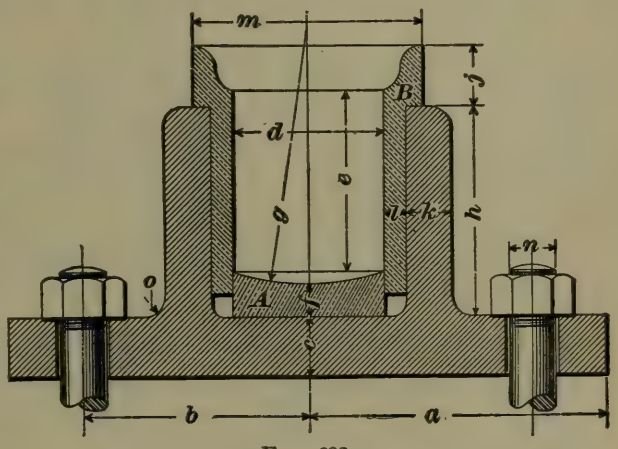

FIG. 698.

Its proportions are as follows:

$a = 2\,d.$
$b = 1.5\,d.$
$c = .25\,d + .375''.$
$e = 1.25\,d.$
$f = .2\,d + .125''.$
$g = 1.75\,d.$
$h = 1.4\,d.$
$j = .4\,d.$
$k = .3\,d.$
$l = .15\,d.$
$m = 1.5\,d.$
$n = .2\,d + .25''.$
$o = .15\,d.$

2022. Pivots with Loose Disks.—When pivots are required to run at great speed, the relative speed of the surfaces in contact may be reduced by placing a number of loose disks between the pivot and the foot-step, as shown in Fig. 699.

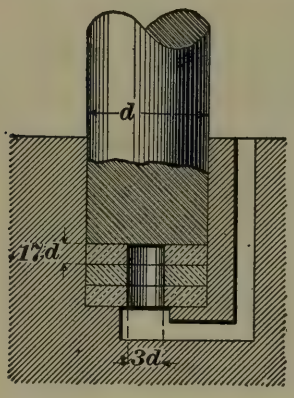

FIG. 699.

If $a =$ the number of disks and $n =$ the revolutions per minute of the pivot, then the relative speed of any of the surfaces in contact is $\frac{n}{a+1}$ revolutions per minute. Suppose, for example, a pivot runs at 3,000 revolutions per minute, and it is desired to reduce the speed between adjacent surfaces to 750 revolutions per minute; then, $750 = \frac{3{,}000}{a+1}$, or $a = 3$, the number of disks required. The pivot and disks may be lubricated by a channel, as shown in the figure. The disks may be made of gun-metal or phosphor-bronze. Proportions are given in the figure.

TOOTH GEARING.

SPUR AND BEVEL GEARS.

NOTE.—Before reading this section, the student should carefully review the portion of Applied Mechanics which relates to gear teeth.

2023. Materials of Gearing.—Gearing is ordinarily made of cast iron. If great strength is required steel may be used. Gears which are called upon to resist shocks may be made of gun-metal or phosphor-bronze. Fast-running gears are sometimes made with *wooden cogs*, or of *rawhide*, or *fiber*, instead of *metal*.

Gear-wheels are either cast with teeth and all complete, or with a blank rim in which the tooth spaces are afterwards cut with a milling cutter. Gears with cast teeth are less expensive; those with cut teeth are more accurate. Gear-cutting machines are now made, however, which can easily

cut teeth on both spur and bevel gears of the largest size; hence, cut gears are quite generally used, except on very large or rough work.

STRENGTH OF GEAR TEETH.

2024. A gear tooth may be considered as a cantilever whose length is l, depth, t, and breadth, b, see Fig. 700.

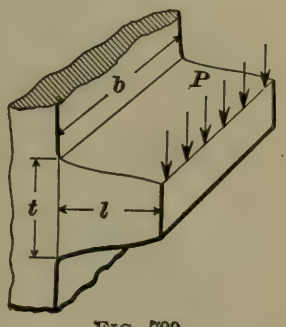

FIG. 700.

Let p = the pressure acting at the pitch line, and, as an extreme case, let the total pressure come on the edge of one tooth, as shown in the figure. (Usually the pressure will be divided among two or three teeth.)

Then, the bending moment $= p\,l$.

The resisting moment $= \frac{SI}{c} = S\frac{\frac{1}{12}bt^3}{\frac{1}{2}t} = \frac{Sbt^2}{6}$.

Therefore, $$pl = \frac{Sbt^2}{6}. \qquad (a)$$

The thickness t at the root of the tooth may be taken equal to $\frac{1}{2}C$, and $l = .7\,C$ from the proportions given in Table 34, Art. **1555.** C = the circular pitch.

Substituting these values in equation (a), we obtain

$$.7\,Cp = \frac{Sb(\frac{1}{2}C)^2}{6} = \frac{SbC^2}{24}.$$

Or, $$bC = 16.8\frac{p}{S}. \qquad \textbf{(266.)}$$

The value of the working stress S depends upon the velocity of the pitch circle of the gear, since, as the speed increases, the teeth become more liable to shocks.

Let v = velocity of a point in the pitch circle in feet per minute. Then, if v is equal to or less than 100, take $S = 4{,}200$ lb. per sq. in. for cast iron.

If v is greater than 100 feet per minute, the safe stress S may be obtained from the following formula:

$$S = \frac{9{,}600{,}000}{v + 2{,}160}. \qquad \textbf{(267.)}$$

To find the pitch C from formula **266**, the relation between b and C must be known. The following proportions are those generally used in practice:

For wheels moving slowly or intermittently, as in hoisting apparatus

$$b = 2\ C \text{ to } 2\tfrac{1}{2}\ C.$$

For more rapidly moving cast gears, for example, transmitting gears,

$$b = 2\tfrac{1}{2}\ C \text{ to } 3\ C.$$

For gears moving more rapidly, and with cut teeth,

$$b = 3\ C \text{ to } 3\tfrac{1}{2}\ C.$$

For very rapidly moving gears with small pitch,

$$b = 3\tfrac{1}{2}\ C \text{ to } 4\ C.$$

EXAMPLE.—A cast gear 3 feet in diameter makes 40 revolutions per minute, and transmits 16 horsepower. Determine the circular pitch of the teeth, and number of teeth.

SOLUTION.—R = radius of gear = 18 inches.

From formula **231**, Art. **1963**,

$$p = \frac{63{,}025\ H}{n\ R} = \frac{63{,}025 \times 16}{40 \times 18} = 1{,}400 \text{ lb.}$$

From formula **267**,

$$S = \frac{9{,}600{,}000}{v + 2{,}160} = \frac{9{,}600{,}000}{3\pi \times 40 + 2{,}160} = 3{,}784 \text{ lb. per sq. in.}$$

Hence, from formula **266**,

$$b\ C = 16.8\ \frac{p}{S} = \frac{16.8 \times 1{,}400}{3{,}784} = 6.2.$$

Assume $b = 2\tfrac{1}{2}\ C$. Then, $b\ C = 2\tfrac{1}{2}\ C^2 = 6.2$ sq. in., or $C = 1.575$ in.

Taking $C = 1.5708$ in., the diametral pitch is exactly 2, and the number of teeth $36 \times 2 = 72$. Ans.

Hence, $C = 1.5708$. Ans.

$$P = \frac{\pi}{C} = 2.$$

Number of teeth $N = D\ P = 36 \times 2 = 72$. Ans.

Breadth of tooth $b = 2\tfrac{1}{2}\ C = 3.93''$, say $3\tfrac{15}{16}''$.

In calculating cast-steel gears, or gears with wooden cogs, the above method is applicable, but the value of S should be multiplied by $3\tfrac{1}{3}$ for steel teeth, and by .6 for wooden cogs.

2025. Wear of Teeth.—Though gear teeth may be amply strong, they may, if poorly designed, wear rapidly. To ensure durability, the dimensions of the tooth should fulfil the following conditions:

Let p = pressure acting at pitch line;
b = breadth of tooth;
n = number of revolutions per minute;
H = horsepower transmitted;
D = diameter of gear in inches.

Then, $$\frac{p\,n}{b} = 28{,}000, \text{ or } b = 4\tfrac{1}{2}\frac{H}{D}. \qquad \textbf{(268.)}$$

In the example above, we have $4\frac{1}{2}\frac{H}{D} = \frac{4\frac{1}{2} \times 16}{36} = 2$ in., and since the breadth calculated for strength is $3\frac{15}{16}''$, the gear will wear well. It is usually necessary to apply formula **268** to pinions of small diameter.

2026. Shrouded Gear Teeth.—The teeth of a gear-wheel are said to be **shrouded** when the rim is made wider

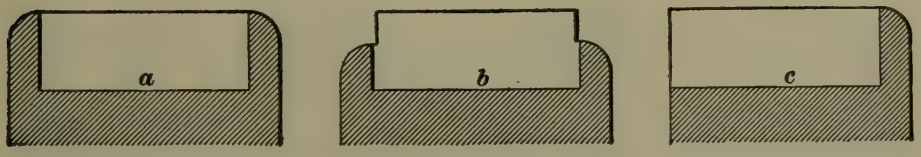

FIG. 701.

than the tooth, and carried outwards so as to unite the ends of the teeth.

Three methods of shrouding are shown in Fig. 701. At *a* the shrouding is carried on both sides to the end of the tooth. In this case it is evident that only one of the pair of wheels gearing together can be shrouded. At *b* the shrouding is carried to the pitch line, and, consequently, both wheels of the pair may be shrouded. At *c* the shrouding is carried up on one side only.

Pinions with few teeth are most benefited by shrouding, since the teeth in that case are weak at the roots, and also because more wear comes on the pinion.

PROPORTIONS OF SPUR AND BEVEL GEAR WHEELS.

2027. Rims.—Various rim sections are shown in Fig. 702. It is good practice to make the rim thickness c equal to the tooth thickness on the pitch circle for gears

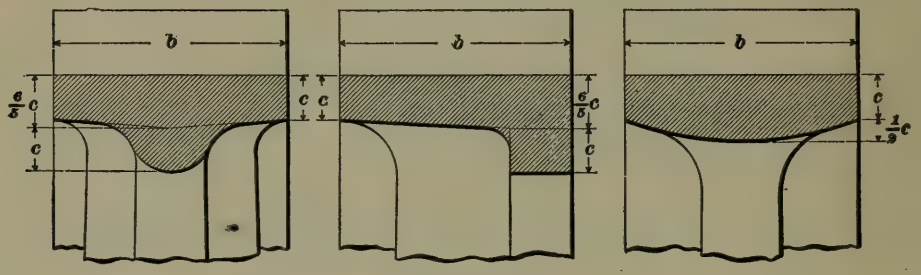

FIG. 702.

whose circumferential pitch is greater than $1\frac{1}{2}$ inches. For gears with small pitch, we may take

$$c = .4\,C + \tfrac{1}{8}'' = \frac{5}{4\,P} + \tfrac{1}{8}''. \qquad \textbf{(269.)}$$

EXAMPLE.—Calculate the thickness of the rim of a gear-wheel whose diametral pitch is 4.

SOLUTION.—By formula **269**,

$$c = \frac{5}{4\,P} + \tfrac{1}{8}'' = \tfrac{5}{16} + \tfrac{1}{8} = \tfrac{7}{16}''. \quad \text{Ans.}$$

2028. The rim of a bevel wheel may have the proportions shown in Fig. 703, where c is to be computed by the rules given in the last article.

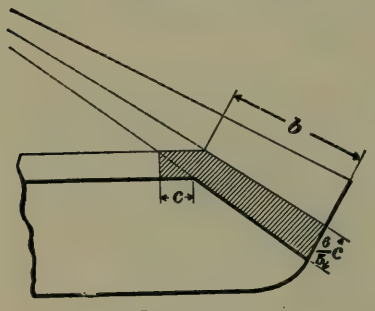

FIG. 703.

2029. When wooden cogs are mortised into a gear-wheel, the rim may have the proportions shown in Fig. 704.

Usually only one of the wheels in a pair that gear together is furnished with wooden teeth, or cogs, in which case the wooden cogs may be made $1\frac{1}{2}$ times as thick as the iron teeth meshing with them; that is,

for the wooden cogs, $t = .6\ C$;
for the iron teeth, $t = .4\ C$, or less.

Fig. 704 shows two common methods of fastening the cogs to the rim.

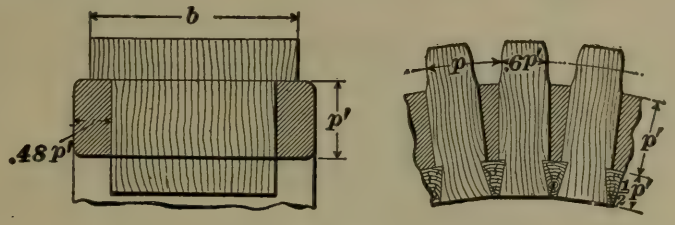

FIG. 704.

2030. Arms of Wheels.—The form of the cross-section of the arms of a gear-wheel depends upon the form

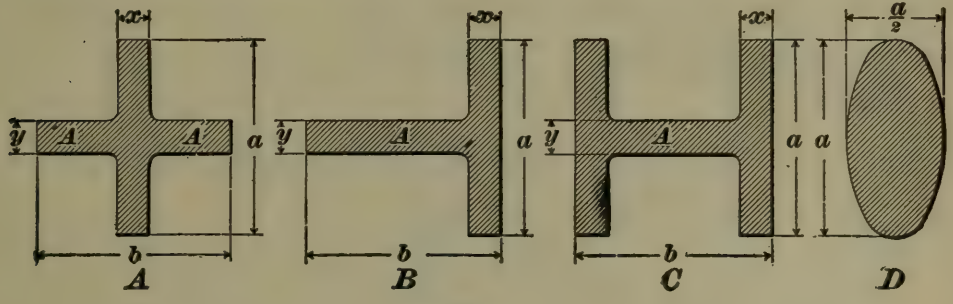

FIG. 705.

of rim used. The forms in ordinary use are shown in Fig. 705. The cross-shaped form A is the one mostly used for spur gears; and the section shown at B, for bevel gears. The section shown at C is good for heavy gears, while the oval form D is a neat form for light gears.

In all of the above forms the dimension a lies in the plane of the wheel, and the dimension b at right angles to this plane, or parallel to the axis of the wheel.

In calculating the strength of the arm, the ribs A, A are not taken into account, as they are intended to give the arm lateral stiffness, and not to add strength.

Let z = number of arms in wheel;
a = width of arm, measured at center of wheel;
x = thickness of arm;
S_1 = allowable safe stress in arm;
R = radius of wheel in inches;
p = pressure between gears at pitch line.

We may consider each arm as fixed at the center of the wheel, and free at the end, which, though not strictly true, is on the safe side. Then, the total bending moment is pR inch-pounds, and the bending moment on each arm is $\frac{pR}{z}$. The moment of resistance is

$$\frac{S_1 I}{c} = S_1 \frac{\frac{1}{12} a^3 x}{\frac{1}{2} a} = \tfrac{1}{6} S_1 a^2 x.$$

Hence,
$$\frac{pR}{z} = \tfrac{1}{6} S_1 a^2 x.$$

To avoid strains and breakage in casting, all parts of the wheel should be of nearly the same thickness; therefore, the thickness of the arm may be made about equal to the thickness of the tooth or of the rim.

That is,
$$x = \tfrac{1}{2} C.$$

But,
$$C = \frac{16.8p}{bS}. \quad \text{(See formula } \mathbf{266}.\text{)}$$

Hence,
$$x = \tfrac{1}{2} C = \frac{8.4p}{bS};$$

or,
$$\frac{pR}{z} = \frac{1.4 S_1 p a^2}{bS};$$

whence,
$$a^2 = \frac{pRbS}{1.4 S_1 p z} = \frac{RbS}{1.4 S_1 z}.$$

Owing to the initial strain set up in the contraction of the casting, S_1 should have a low value, say 3,000 lb. S may have the value given above; that is, 4,200 lb.

Then,
$$a^2 = \frac{Rb \times 4{,}200}{1.4 \times 3{,}000 \times z} = \frac{Rb}{z};$$

or,
$$\left.\begin{aligned} a &= \sqrt{\frac{Rb}{z}} \\ x &= \tfrac{1}{2} C. \end{aligned}\right\} \qquad \textbf{(270.)}$$

For a case in which the proportions given by formula **270** do not give an arm whose appearance is satisfactory, the value of x may be varied a little in either direction, and a new value of a may then be calculated so as to give the required moment of resistance.

EXAMPLE.—A gear-wheel $2\frac{1}{2}$ feet in diameter, with six arms, has a pitch of 2 inches, and the breadth of tooth is 5 inches. Find the dimensions of the arm.

SOLUTION.—Use formula **270.**

$$a = \sqrt{\frac{R\,b}{z}} = \sqrt{\frac{15 \times 5}{6}} = \sqrt{12\tfrac{1}{2}} = 3\tfrac{1}{2}''. \text{ nearly.} \quad \text{Ans.}$$

$$x = \tfrac{1}{2}\,C = 1''. \quad \text{Ans.}$$

For arms of oval or elliptical cross-section, the moment of resistance is $\frac{S_1 I}{c}$, which equals $\frac{S_1 \frac{\pi a^3 (\frac{1}{2}a)}{64}}{\frac{1}{2}a}$. (See Table of Moments of Inertia).

Hence, $$\frac{p\,R}{z} = \frac{S_1 \pi a^3}{64}.$$

Combining this equation with formula **266,** we obtain, after reducing,

$$a = 1.2\sqrt[3]{\frac{b\,C\,R}{z}}.$$

Or, $$a = 1.75\sqrt[3]{\frac{b\,R}{P\,z}}. \qquad \textbf{(271.)}$$

EXAMPLE.—A gear-wheel 12 inches in diameter has 48 teeth and 4 arms. The rim is $2\frac{1}{2}$ inches wide. Supposing the arms to be of elliptical cross-section, find their dimensions, the thickness being half the breadth.

SOLUTION.—Using formula **271,**

$$a = 1.75\sqrt[3]{\frac{b\,R}{P\,z}} = 1.75\sqrt[3]{\frac{2\frac{1}{2} \times 6}{\frac{48}{12} \times 4}} = 1.70''.$$

$$a = 1\tfrac{23}{32}''. \quad \text{Ans.}$$

$$\tfrac{1}{2}\,a = \tfrac{7}{8}'', \text{ nearly.} \quad \text{Ans.}$$

Formulas **270** and **271** give the width of arm measured at the center of wheel. The arm is tapered from center to circumference. For small gears the taper may be $\frac{1}{32}$ on each side; for larger gears, $\frac{1}{48}$ on each side. The thickness x remains constant, but in the elliptical form the arm is tapered in both width and thickness, so that the latter is constantly equal to half the former.

The average thickness of the stiffening ribs A, Fig. 705, may be .4 C. The ribs are tapered slightly to allow the pattern to be easily drawn from the mold. At the hub the

width of the rib may be b, the same as the length of the tooth. The rib is tapered so that at the rim the width is $\frac{3}{4}\,b$ to $\frac{7}{8}\,b$.

The number of arms to be used in a given gear-wheel is largely a matter of judgment. Reuleaux gives the following formula:

$$z = .55\sqrt[4]{N^2\,C}, \qquad \textbf{(272.)}$$

where z is the number of arms; N, the number of teeth, and C, the circular pitch.

EXAMPLE.—How many arms should be given a gear 4 feet in diameter, diametral pitch $1\frac{1}{2}$?

SOLUTION.—$N = 4 \times 12 \times 1\frac{1}{2} = 72$.

$$C = \frac{\pi}{P} = \frac{\pi}{1.5} = 2.09''.$$

Hence, from formula **272**,

$$z = .55\sqrt[4]{72^2 \times 2.09} = 5.61.$$

Therefore, use 6 arms. Ans.

If the formula gives an odd number of arms, the nearest even number may be used, if desired.

2031. Hubs or Naves of Gear-Wheels.—The thickness of the hub is often made equal to the radius of the shaft on which the wheel is placed. If the shaft is enlarged for the wheel seat, the thickness of the hub is made equal to the radius of the main portion of the shaft. Then, if d represents the diameter of the shaft, $1.2\,d =$ the diameter of the enlarged portion, and $\frac{1}{2}\,d$ is the thickness of the hub.

The above rule is very generally used, and gives good proportions when the wheel transmits the full power of the shaft. If, however, a gear transmits only a fraction of the power of the shaft, the hub thickness may be calculated from the following formula, which may also be used for finding the thickness of the hub of any gear-wheel:

$$w = \tfrac{1}{3}\sqrt[3]{b\,C\,R}, \qquad \textbf{(273.)}$$

where w is the thickness of the hub, and b, C, and R the same as in the previous formulas.

The length of the hub varies from b to $1.4\,b$.

The hubs of large and heavy wheels may be split as shown in Fig. 706. This relieves the hub from the initial strains due to unequal contraction in cooling.

Strips of metal are placed in the slots, and the segments

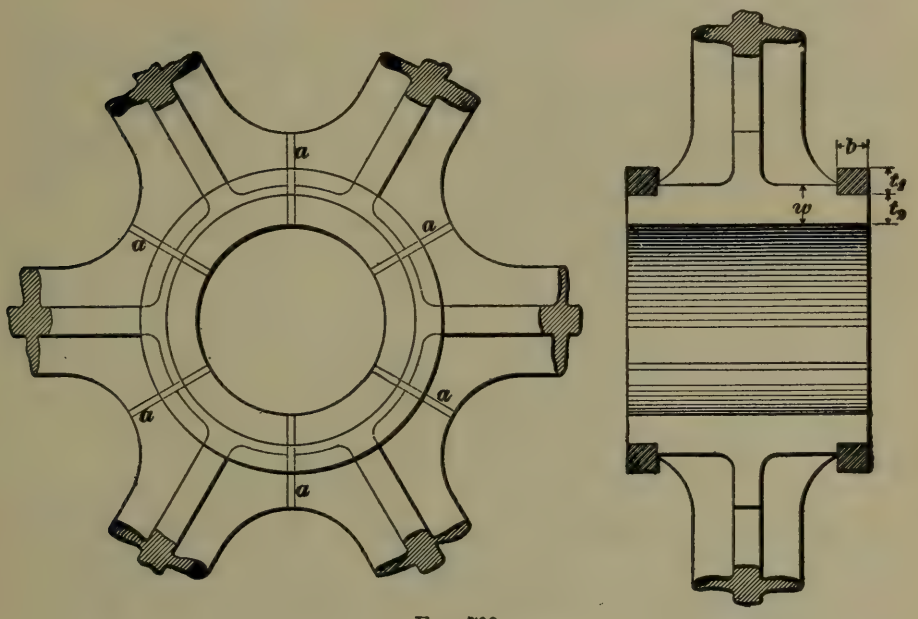

FIG. 706.

are held together by iron or steel bands shrunk on. The proportions are as follows:

$$t_1 = \tfrac{2}{3}\, w;\ t_2 = \tfrac{3}{4}\, w;\ b = \tfrac{7}{12}\, w.$$

2032. Built-Up Wheels.—For convenience in casting, and also for convenience in transportation, large and heavy wheels are made in sections, which are assembled and bolted together. The division of the wheel may be made in various ways. The hub and arms may be cast separately, and the rim in segments; the hub and arms may be cast together, and the rim in segments; or, finally, each division may include a portion of the hub, an arm, and a segment of the rim. Fig. 707 shows one method of bolting the rim, segments, and arm.

Fig. 708 shows a method in which the rim and hub of the gear are parted and held together by bolts.

EXAMPLE.—Compute the leading dimensions for a spur wheel to work under the following conditions:

Diameter of pitch circle = 5 ft. 6 in.

Revolutions per minute = 45.

Horsepower transmitted = 240.

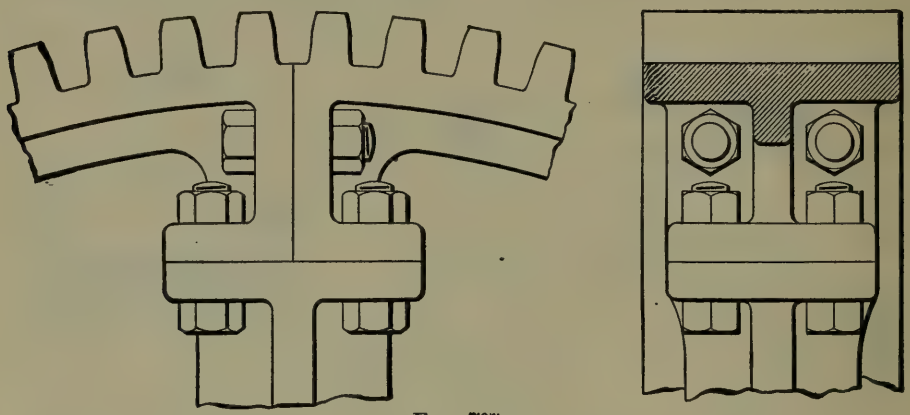

FIG. 707.

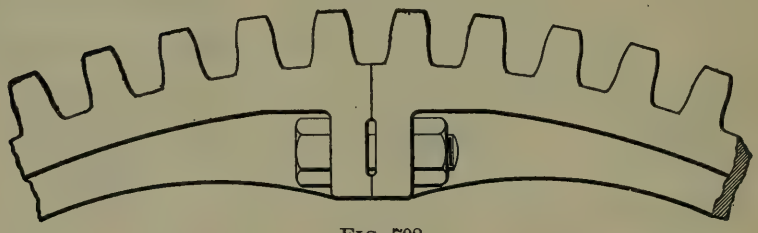

FIG. 708.

SOLUTION.—The velocity of a point in the pitch circle is $\pi D n = 3.1416 \times 5\frac{1}{2} \times 45 = 778$ ft. per minute.

Hence, from formula **267**,

$$S = \frac{9{,}600{,}000}{778 + 2{,}160} = 3{,}270 \text{ lb. per sq. in., in round numbers.}$$

From formula **231**, Art. 1963,

$$p = \frac{63{,}025\,H}{R\,n} = \frac{63{,}025 \times 240}{33 \times 45} = 10{,}186 \text{ lb.}$$

Now, from formula **266**,

$$b\,C = 16.8\,\frac{p}{S} = \frac{16.8 \times 10{,}186}{3{,}270} = 52.3 \text{ sq. in.}$$

Assume $b = 3\,C$;

Then, $3\,C^2 = 52.3$;

$C = 4.17''$.

$$\text{Number of teeth} = \frac{\text{circumference of wheel}}{4.17} = \frac{3.1416 \times 66}{4.17} = 49.7.$$

Taking 50 for the number of teeth, we have

$$C = \frac{3.1416 \times 66}{50} = 4.147 \text{ inches.}$$

Breadth of face $= b = 3\,C = 3 \times 4.147 = 12.44 = 12\frac{7}{16}''$. Ans.
Thickness of tooth $= t = .475\,C = .475 \times 4.147 = 1.97''$ Ans.
Height above pitch line $= .3\,C = .3 \times 4.147 = 1.24''$. Ans.
Depth below pitch line $= .4\,C = .4 \times 4.147 = 1.66''$. Ans.

For the size of the shaft we may use formula **123**, Art. **1415.**

$$d = 4.92 \sqrt[4]{\frac{H}{n}} = 4.92 \sqrt[4]{\frac{240}{45}} = 7\tfrac{1}{2}'', \text{ nearly.} \quad \text{Ans.}$$

The enlargement for the wheel seat will then have a diameter of

$$1.2\,d = 1.2 \times 7.5 = 9''. \quad \text{Ans.}$$

For the thickness of the hub we use formula **273.**

$$w = \tfrac{1}{8} \sqrt[3]{b\,C\,R} = \tfrac{1}{8} \sqrt[3]{12.44 \times 4.147 \times 33} = 4'', \text{ nearly.} \quad \text{Ans.}$$

The length of hub may be

$$1.4\,b = 1.4 \times 12.44 = 17\tfrac{7}{16}'', \text{ nearly.} \quad \text{Ans.}$$

For the number of arms, formula **272** gives

$$z = .55 \sqrt[4]{N^2\,C} = .55 \sqrt[4]{50^2 \times 4.147} = 5.5.$$

Therefore, use 6 arms. Ans.

For the width of arm at the center of the wheel, formula **270** gives

$$a = \sqrt{\frac{R\,b}{z}} = \sqrt{\frac{33 \times 12.44}{6}} = 8.27, \text{ say } 8\tfrac{1}{4}''. \quad \text{Ans.}$$

Supposing the arms to taper $\frac{1}{48}$ on each side, the width of arm at pitch line is

$$8\tfrac{1}{4} - (2 \times 33 \times \tfrac{1}{48}) = 6\tfrac{7}{8}''. \quad \text{Ans.}$$

The thickness of the arm is $\frac{1}{2}\,C = \frac{1}{2} \times 4.147 = 2.07 = 2\frac{1}{16}''$. Ans.
The thickness of the stiffening rib is $.4\,C = .4 \times 4.147 = 1.66 = 1\frac{11}{16}''$. Ans.

2033. Proportions of Bevel Gears.—The rules and formulas used in designing spur gears are equally applicable to bevel gears. For the circular pitch C, used in spur-gear formulas, should be substituted the mean circular pitch of the bevel gear; that is, the circular pitch measured at the *middle* of the tooth face.

Denote this mean circular pitch by the symbol C_m. Then, the bevel wheel may be designed by formulas **266** to **273** by placing C_m for C, and P_m for P.

Then, $$b\,C_m = 16.8\,\frac{p}{S}. \qquad (\textbf{266}a.)$$

$$c = .4\,C_m + \tfrac{1}{8}'' = \frac{5}{4\,P} + \tfrac{1}{8}''. \qquad (\textbf{269}a.)$$

$$\left.\begin{aligned} a &= \sqrt{\frac{R\,b}{z}}. \\ x &= \tfrac{1}{2}\,C_m. \end{aligned}\right\} \qquad (270a.)$$

$$\left.\begin{aligned} a &= 1.2\sqrt[3]{\frac{b\,C_m\,R}{z}}. \\ a &= 1.75\sqrt[3]{\frac{b\,R}{P_m\,z}}. \end{aligned}\right\} \qquad (271a.)$$

$$z = .55\sqrt[4]{N^2\,C_m}. \qquad (272a.)$$

$$w = \tfrac{1}{3}\sqrt[3]{b\,C_m\,R}. \qquad (273a.)$$

WORM GEARING.

2034. Construction of Worm Gearing.—Worm-

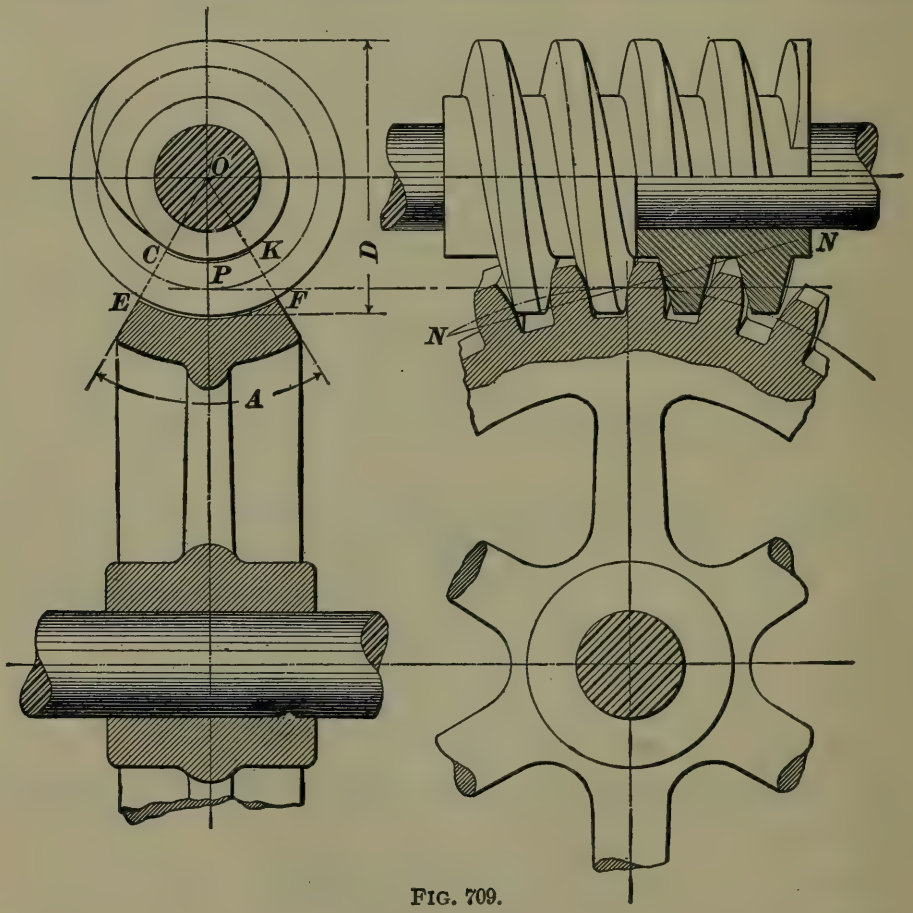

FIG. 709.

wheels may be constructed in various ways. The wheel may be similar to a spur wheel, except that the teeth make an

angle with the axis of the wheel equal to that of the threads of the worm measured at the pitch diameter. (See Fig. 709.)

For careful and accurate work, the wheel is cut by a special milling tool called a **hob.** This hob is a steel worm which has been cut in a lathe, notched to form a milling cutter, and then hardened and tempered. The teeth cut by this hob must evidently have the correct form to gear with a worm having the same pitch as the hob. When the wheel teeth are constructed by this method, there is much closer contact between the worm and the wheel. Therefore, the durability and efficiency of the mechanism are largely increased.

2035. Friction of Worm Gearing.—Since the threads of the worm slide on the teeth of the wheel, there is considerable work expended in overcoming friction. It, therefore, becomes necessary to consider the form of worm and wheel which will work with least friction.

Let R_1 = radius of pitch circle of wheel;
R = radius of pitch circle of worm;
p = the axial pitch of the worm;
p_1 = circular pitch of wheel, and divided axial pitch of worm;
N = number of threads in worm;
N_1 = number of teeth in wheel;
P = resistance to turning at circumference of worm-wheel;
Q = actual force acting at pitch line of worm necessary to turn worm;
Q' = force required to turn worm if there were no friction between it and wheel;
e = efficiency of worm gearing;
a = angle between tangent to worm thread and any plane perpendicular to axis of worm.

The efficiency of the gear is the ratio of the useful work to the total work. Assuming the coefficient of friction to be about .15 or .16, the efficiency may be obtained by the following formula:

$$e = \frac{Q'}{Q} = \frac{Np_1}{Np_1 + R}. \qquad \textbf{(274.)}$$

Hence, for maximum efficiency, the radius R of the pitch circle of the worm should be made as small as possible, and the number of threads should be as large as possible.

EXAMPLE.—If the radius of pitch circle of worm is 3 times the divided axial pitch p_1, and if the worm has 2 threads, what is its efficiency?

SOLUTION.—From formula **274**,

$$e = \frac{N p_1}{N p_1 + R} = \frac{2 p_1}{2 p_1 + 3 p_1} = .40 = 40 \text{ per cent.} \quad \text{Ans.}$$

If the radius R were only $2 p_1$, the efficiency would be

$$e = \frac{2 p_1}{2 p_1 + 2 p_1} = 50 \text{ per cent.}$$

On the other hand, if the number of threads were 1, the efficiency would only be

$$e = \frac{p_1}{p_1 + 3 p_1} = 25 \text{ per cent.}$$

The leading problem, therefore, in designing a worm gear is to make the ratio $\frac{R}{p_1}$ as small as possible, and at the same time allow the worm shaft a sufficient diameter for strength.

The twisting moment acting on the worm shaft is

$$Q R = \frac{Q' R}{e}.$$

From the principle of work we have $2 \pi R Q' = P p$.

Hence, $$\frac{Q' R}{e} = \frac{P p}{2 \pi e},$$

which is the twisting moment to be used in calculating the worm shaft.

EXAMPLE.—The circular pitch of a worm-wheel is $.7854 = \frac{\pi}{4}$; it has 40 teeth, and transmits 2 horsepower at 30 revolutions per minute. The worm has 1 thread, and the radius of its pitch circle is 2 inches. Calculate the twisting moment on the shaft, and the size of the shaft, if made of wrought iron.

SOLUTION.—Diametral pitch of wheel $= \frac{\pi}{\frac{\pi}{4}} = 4$.

Diameter of wheel $= \frac{40}{4} = 10''$.

Radius of wheel $= R_1 = 5''$.

From formula **231**, Art. **1963**,

$$P = \frac{63{,}025\,H}{R_1\,n} = \frac{63{,}025 \times 2}{5 \times 30} = 840 \text{ lb., nearly.}$$

From formula **274**,

$$e = \frac{N p_1}{N p_1 + R} = \frac{.7854}{.7854 + 2} = 28 \text{ per cent.}$$

Hence, twisting moment $= \frac{P p}{2\pi e} = \frac{840 \times \frac{\pi}{4}}{2\pi \times .28} = 375$ in.-lb. Ans.

Using formula **123**, Art. **1415**,

diameter of shaft $d = .31\sqrt[3]{375} = 1.364$, say $1\frac{3}{8}''$. Ans.

The pitch of the worm-wheel may be calculated from the formula for the pitch of spur gears.

$$b p_1 = 16.8 \frac{P}{S}.$$

2036. The rim and arms of the worm-wheel may be given the same proportions as the rim and arms of a spur wheel of the same diameter and pitch, except that the width of the face of the wheel is generally made equal to double the pitch.

The rim may have the forms shown in Fig. 710. The

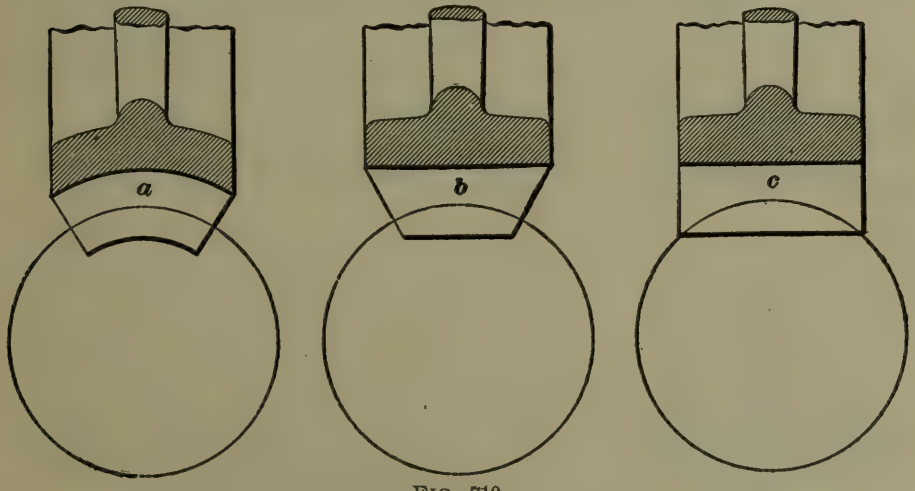

FIG. 710.

form *a* is best, as there is line contact between the thread and tooth.

The ratio $\frac{R}{p_1}$ may vary from 1 to 4 or 6. When the worm is cut on the shaft, the lower values may be used. When, however, the worm is cast and keyed on the shaft, the

ratio must be made greater. As has been shown, the smaller this ratio the greater the efficiency. The number of threads in the worm varies from 1 to 4, depending upon the velocity ratio to be transmitted.

Letting N and N' represent the number of threads on worm and teeth on wheel, respectively, and w the velocity ratio, we have

$$w = \frac{N'}{N}.$$

Usually it is undesirable to give the worm-wheel less than 30 teeth; hence, if the desired velocity ratio is less than 30, the worm must have more than one thread. For example, if the worm shaft is to make 20 revolutions while the wheel shaft makes one revolution, we may have either $N' = 40$ and $N = 2$, or $N' = 60$ and $N = 3$.

The length of the worm is from $3\,p$ to $6\,p$, usually $4\,p$; that is, there are usually 4 turns, as shown in Fig. 709.

FRICTION GEARING.

2037. Friction gearing may be used for the transmission of small powers; it should not be used for heavy work.

In this style of gearing the smooth faces of a pair of wheels are pressed together, and one drives the other by means of the friction between the surfaces in contact.

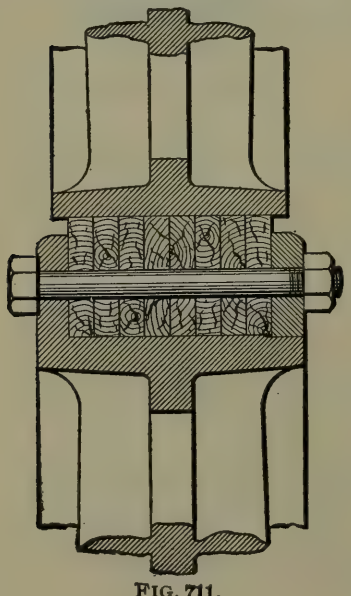

FIG. 711.

If the resistance to turning offered by the driven wheel is less than the frictional resistance between the surfaces of the two wheels, motion will be transmitted; otherwise the surfaces will slide over each other, and the gearing will not work.

It is the usual practice to face the rim of one of the wheels with leather, wood, or paper. Fig. 711 shows a friction wheel thus faced with wood.

As shown, the grain of the wood lies along the working surface. When leather or paper is used, the edges of the layers are used as the driving surface. The pulley which is covered with wood or paper must be the driver; the driven pulley is usually of cast iron.

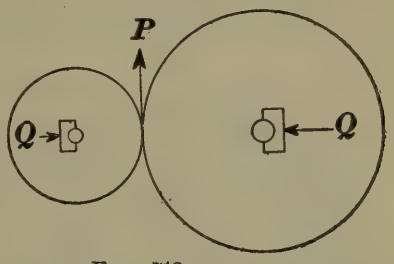

FIG. 712.

Let P (see Fig. 712) = driving force at circumference of friction wheels;

Q = force acting on the bearings to press the wheels together;

f = coefficient of friction between surfaces.

Then, $$Qf = P, \text{ or } Q = \frac{P}{f}. \qquad \textbf{(275.)}$$

The coefficient of friction f has about the following values:

Metal on metal.....$f = .15$ to $.25$.
Wood on metal.....$f = .25$ to $.40$.
Paper on metal.....$f = .20$.
Leather on metal.....$f = .25$ to $.30$.

The power transmitted by a pair of friction gears can be easily calculated. The following example shows the method:

EXAMPLE.—Suppose a friction wheel faced with leather to drive another $2\frac{1}{2}$ feet in diameter at 300 revolutions per minute. The force pressing the wheels together is 450 pounds. Assuming $f = .3$, calculate the horsepower transmitted.

SOLUTION.—By formula **275**, $P = Qf = 450 \times .3 = 135$ lb.

$$R = \text{radius of wheel in inches} = \frac{2\frac{1}{2} \times 12}{2} = 15''.$$

From formula **231**, Art. **1963**,

$$H = \frac{P\,R\,N}{63{,}025} = \frac{135 \times 15 \times 300}{63{,}025} = 9.64 \text{ horsepower.} \quad \text{Ans.}$$

The calculations for bevel friction gears are more complicated, but may be easily made.

The proportions of the rim, hub, and arm of a friction gear-wheel may be made the same as those of a toothed gear-wheel transmitting the same power.

FLEXIBLE GEARING.

BELT GEARING.

BELT MATERIALS.

2038. Leather.—The material mostly used for belts is leather tanned from ox hides. The leather is about $\frac{5}{16}$ inch thick, and is obtained in strips up to 5 feet in length. Belts are made of any required length by joining these strips together.

Single belts are made of one thickness of leather; **double belts** from two thicknesses of leather.

Cotton may be used for belts which are exposed to dampness. Cotton belts can be made very wide, and without the many joints necessary in leather belts. The necessary thickness is obtained by sewing together from 4 to 10 plies of cotton duck. Cotton belting is cheaper and stronger than leather belting, but probably less durable.

Rubber belts are made by cementing together plies of cotton duck with india rubber. Rubber belts are more adhesive than leather belts, and, hence, have greater driving capacity. Rubber belts are considered to be the best to use in damp situations.

Dimensions of Belts.—Practical formulas for computing the dimensions of belts are given in Arts. **1483** to **1489** inclusive.

BELT PULLEYS.

2039. Fig. 713 shows a **solid,** and Fig. 714 a **split, cast-iron belt pulley.** The general form of these pulleys corresponds very closely to the best modern American practice. The split pulley has the advantage of being more easily put on the shaft, especially when the shaft is in position or has other pulleys already on it.

When the amount of power to be transmitted by a pulley is small, it may be fastened to the shaft by set screws. Split pulleys are also made so that the bolts through the hub will serve as a clamp to draw the hub tight enough on the shaft to prevent slipping with small loads. When the amount of

power to be transmitted is considerable, pulleys should be fastened with keys, and in some cases both keys and set-screws are provided.

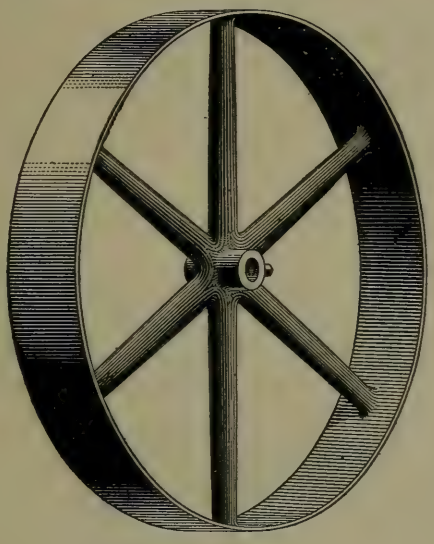

FIG. 713.

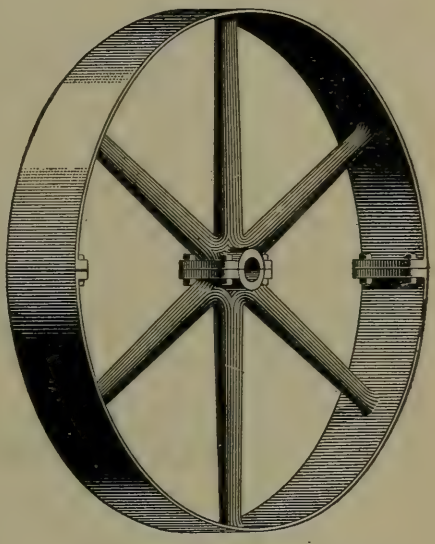

FIG. 714.

In the rules and formulas for dimensions of pulleys, the following symbols will be used to represent the various dimensions:

b = breadth of belt running on pulley;
B = breadth of pulley rim;
d = diameter of shaft on which pulley is keyed;
t = thickness of pulley rim at edge;
a = width of arm at center of pulley;
w = thickness of hub of pulley;
l = length of hub of pulley;
n = number of arms;
D = diameter of pulley;
R = radius of pulley;
s = swell at center of pulley rim.

All dimensions to be in inches.

NOTE.—To obtain a, the arms are supposed to extend through the hub to the center of the pulley. (See Fig. 720.)

2040. Rim of Pulley.—The rim is usually of the form shown in Fig. 715. If the rim is crowning, the curve may be struck with a radius of from $3B$ to $5B$, in which

case $s = \frac{B}{20}$ to $\frac{B}{40}$, about. The width B is made from $\frac{9}{8}b$ to $\frac{5}{4}b$; i. e., $B = \frac{9}{8}b$ to $\frac{5}{4}b$.

For the thickness t, the following formula gives results which agree well with the practice of good shops:

$$t = \frac{B + D}{200} + \tfrac{1}{16}''. \qquad \textbf{(276.)}$$

For double belts, $\frac{1}{8}''$ may be added to the thickness obtained by the above formula.

2041. Flange Pulleys.—When there is a liability of the belt frequently slipping, caused by fluctuations in the

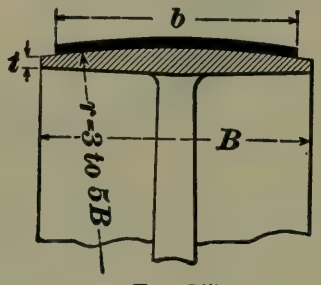

FIG. 715.

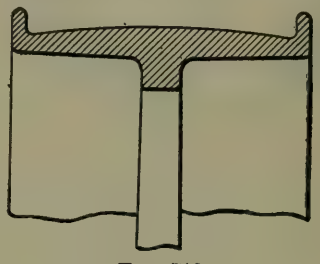
FIG. 716.

power transmitted, the pulley rim may be cast with flanges, as shown in Fig. 716. See also Figs. 381 and 382, Art. **1500.**

2042. Arms of Pulleys.—The arms are usually of oval section, as shown in Fig. 717, A and B. It is customary to make the thickness $\frac{1}{2}$ the width.

The arms are generally straight, as in Figs. 713 and 714, though curved arms are occasionally used.

The number of arms to be used is largely a matter of judgment, but in practice, for all sizes of pulleys and engine band-wheels, under 10 feet in diameter, by far the greater number are made with 6 arms; 8 or 10 arms are sometimes used for pulleys above 6 feet in diameter, and for very small sizes, 4 arms are sufficient.

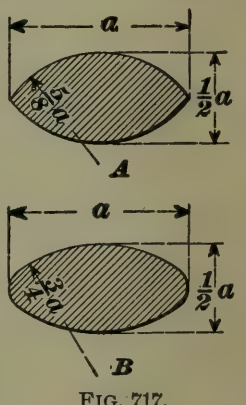

FIG. 717.

To calculate the width a of the arm, we may assume, as in gear-wheels, that the bending moment is pR, and that, consequently, the bending moment for each arm is $\frac{pR}{n}$.

The resisting moment of the section shown in Fig. 717 is practically $.04\ a^3\ S$, where S is the allowable safe stress. If we allow 2,500 lb. per sq. in. as the safe stress, we have

$$\frac{pR}{n} = 100\ a^3, \text{ or } a = \sqrt[3]{\frac{pR}{100\,n}}.$$

$p = T_1 - T_2$, the difference of the belt tension is usually not known exactly. Its maximum value can, however, easily be found, as follows:

For single belts $\frac{7}{32}''$ thick, an average tension of 320 lb. per sq. in. of section may be allowed. Then,

$$T_1 = \tfrac{7}{32} \times 320 = 70 \text{ lb. per inch of width of belt.}$$

Usually P is not more than $\frac{1}{2}$ of T_1, and its *maximum* value may be taken at say 50 lb. per inch of width. For double belts, take $P = 100$ lb. per inch of width.

Then, $p = 50\ B$ for single belts.

$p = 100\ B$ for double belts.

Substituting these values of p in the above equation,

$$\left.\begin{aligned} a &= \sqrt[3]{\frac{BR}{2n}}, \text{ for single belts.} \\ a &= \sqrt[3]{\frac{BR}{n}}, \text{ for double belts.} \end{aligned}\right\} \qquad \textbf{(277.)}$$

The taper in the width of the arms towards the rim may be made $\frac{1}{2}''$ per foot, and the thickness at the rim $\frac{1}{2}$ the width.

EXAMPLE.—Calculate the size of the arms of a 6-arm pulley, 30 inches in diameter, with a 6-inch face.

SOLUTION.—For single belt, we have, from formula **277**,

$$a = \sqrt[3]{\frac{BR}{2n}} = \sqrt[3]{\frac{6 \times 15}{2 \times 6}} = 2 \text{ in., nearly.} \quad \text{Ans.}$$

At the rim the width is $2'' - (\frac{1}{2} \times 1\frac{1}{4}) = 2'' - \frac{5}{8}'' = 1\frac{3}{8}''$. Ans.

Thickness at center $= 2 \times \frac{1}{2} = 1''$. Ans.

Thickness at the rim $= 1\frac{3}{8}'' \times \frac{1}{2} = \frac{11}{16}''$. Ans.

For very wide pulleys it is sometimes desirable to use two sets of arms, as shown in Fig. 718.

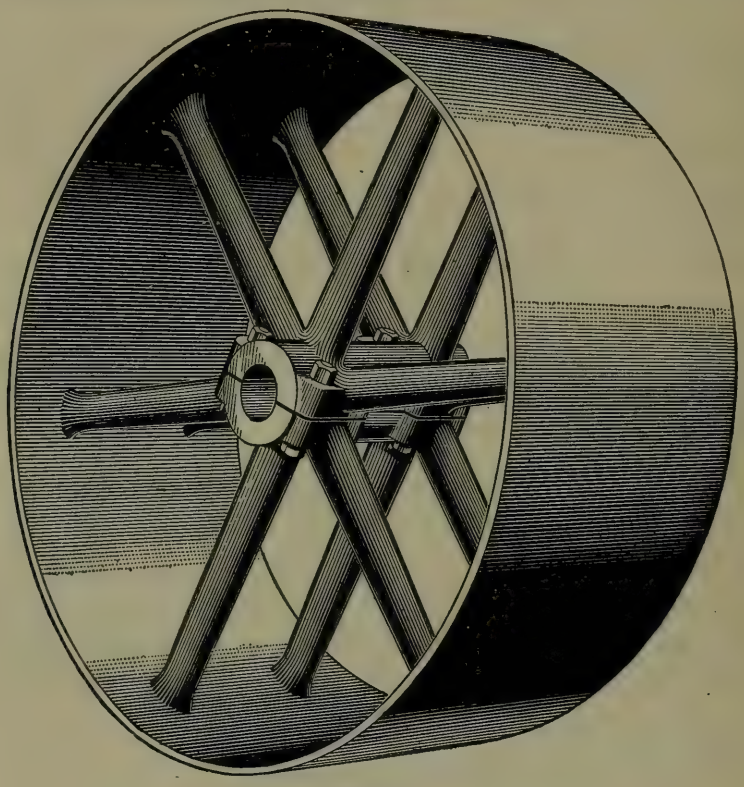

FIG. 718.

To calculate the size of the arms in this case, the pulley may be considered as made of two pulleys each of width $\frac{1}{2}B$. Then, find the dimensions of the arms as before, and multiply these dimensions by $\sqrt[3]{\frac{1}{2}} = .8$, nearly.

2043. Hub of Pulley.—The thickness of the hub may be obtained from the following formula:

$$w = \frac{(B + R)}{32} + \tfrac{1}{8}''. \qquad \textbf{(278.)}$$

The length of the hub may be, $l = \frac{2}{3}B$ to B.

The key-way may be calculated by the rules given in Art. **1965,** etc.

2044. Loose Pulleys.—Pulleys which run loose on a shaft should have longer hubs than those keyed fast; the hubs may also be lined with brass bushings, if desired.

Where a fast and a loose pulley are placed together on a shaft, as shown in Fig. 719, the length l of the hub of the loose pulley may be $l = 1.2\ B$, and that of the fixed pulley $l' = .8\ B$. The thickness of the hub of the loose pulley may be less than that of the fast pulley on account of its increased length.

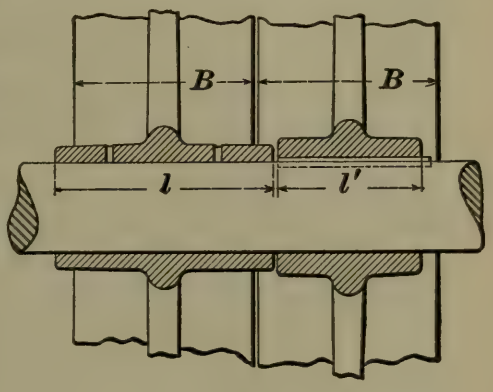

FIG. 719.

Some arrangement must be provided for oiling the loose pulley; generally one or two oil holes are drilled through the hub.

2045. For split pulleys the size of the bolts at rim and hub may be determined as follows:

Let A = area of cross-section of rim;
A' = area of cross-section of hub along the line of division;
S = net section of bolt or bolts at rim;
S' = net section of bolt or bolts at hub.

Then,
$$S = \frac{A}{4} + \tfrac{1}{4} \text{ square inch.}$$
$$S' = \frac{A'}{4} \text{ square inch.} \qquad \textbf{(279.)}$$

EXAMPLE.—The hub of a split pulley is 4 inches long and $1\frac{1}{4}$ inches thick. If the hub is held by 4 bolts, what should be the diameter of the bolts?

SOLUTION.—$A' = 4 \times 1\frac{1}{4} = 5$ sq. in.

By formula **279**,

$$S' = \frac{A'}{4} = \tfrac{5}{4} \text{ sq. in.} = \text{net section of 4 bolts.}$$

$\frac{5}{4} \div 4 = \frac{5}{16}$ sq. in. = net section of 1 bolt.

Hence, from Table 43, Art. **1926**, the diameter of bolt is $\frac{3}{4}$ inch. Ans.

2046. Wrought-iron pulleys are coming into extensive use, and possess important advantages over those made of cast iron. They are lighter and stronger, and are free

from the initial stresses to which cast-iron pulleys are liable. Owing to the stresses due to centrifugal force, cast-iron pulleys can not be safely run at very high speeds; wrought-iron pulleys, however, may be used at almost any reasonable speed, because of the greater tenacity of the material of which they are made. Wrought-iron pulleys are usually *split.*

2047. Maximum Speed of Cast-Iron Pulleys.— When a pulley rotates, each portion of the rim tends to fly outwards in the direction of a tangent to the rim. This tendency is due to the *centrifugal force*, so called.

The centrifugal force on each element of the rim acts radially outwards, and the pulley under its action is analogous to a section of a steam boiler under the pressure of steam. The rim tends to break at two sections which are at the opposite ends of a diameter.

Table 51 gives values of the stress per square inch produced in a pulley rim by centrifugal force for various velocities:

TABLE 51.

Velocity of rim in feet per second.....	60	80	100	150	200
Velocity of rim in feet per minute.....	3,600	4,800	6,000	9,000	12,000
Stress in rim in pounds per sq. in.:					
Cast iron	351	624	975	2,194	3,900
Wrought iron.....	378	672	1,050	2,362	4,200

To the stress given in the above table must be added the initial stresses due to contraction in cooling, and the stress caused by the belt pull.

It is usually considered unsafe to run a cast-iron pulley, gear-wheel, or fly-wheel at a higher rim speed than 100 feet per second. Since the centrifugal force increases in direct proportion to the cross-section of the rim, it is evident that it is useless to try to provide against it by putting more material in the rim.

TABLE 52.

Diameter.	Face.	Rim.		Arm.		Hub.		Boss.		
		A	B	C	D	E	F	G	H	I
6″	4	$\frac{1}{8}$	$\frac{3}{16}$	$\frac{2}{4}$	$\frac{7}{16}$	3	$\frac{2}{8}$	$\frac{1}{2}$	1	$\frac{1}{4}$
	6	....	..	"	"	$3\frac{1}{2}$	$\frac{1}{2}$	"	"	"
	8	....	..	"	"	"	"	"	"	"
	10	....	..	"	"	4	"	"	"	"
	12	....	..	"	"	"	"	"	"	"
8	4	$\frac{1}{8}$	$\frac{3}{16}$	$\frac{13}{16}$	$\frac{7}{16}$	3	$\frac{2}{8}$	$\frac{1}{2}$	1	$\frac{1}{4}$
	6	....	..	....	....	$3\frac{1}{2}$	$\frac{1}{2}$	..	..	..
	8	$\frac{5}{32}$	$\frac{1}{4}$	$1\frac{1}{16}$	$\frac{9}{16}$	$4\frac{1}{2}$	..	..	..	..
	10	....	..	....	....	$5\frac{1}{2}$	..	..	..	..
	12	....	..	....	....	..	..	..	..	..
10	4	$\frac{1}{8}$	$\frac{3}{16}$	$\frac{15}{16}$	$\frac{9}{16}$	3	$\frac{1}{2}$	$\frac{1}{2}$	1	$\frac{1}{4}$
	6	$\frac{5}{32}$	$\frac{1}{4}$	$1\frac{1}{16}$	....	$3\frac{1}{2}$	..	..	..	..
	8	....	..	....	....	$4\frac{1}{2}$	..	..	..	..
	10	....	..	$1\frac{5}{16}$	$\frac{5}{8}$	$5\frac{1}{2}$	$\frac{5}{8}$	$\frac{5}{8}$	$1\frac{1}{4}$	$\frac{2}{8}$
	12	....	..	....	....	..	..	..	..	..
12	4	$\frac{5}{32}$	$\frac{1}{4}$	1	$\frac{7}{16}$	$3\frac{1}{4}$	$\frac{1}{2}$	$\frac{1}{2}$	1	$\frac{1}{4}$
	6	....	..	$1\frac{2}{4}$	$\frac{1}{2}$	4	..	..	..	..
	8	....	..	....	....	5	$\frac{5}{8}$	$\frac{5}{8}$	$1\frac{1}{4}$	$\frac{2}{8}$
	10	$\frac{3}{16}$ +	$\frac{5}{16}$	$1\frac{1}{2}$	$\frac{2}{4}$	$5\frac{1}{2}$	..	..	..	..
	12	....	..	....	....	$6\frac{1}{2}$	..	..	..	..
14	4	$\frac{5}{32}$ +	$\frac{1}{4}$	$1\frac{1}{8}$	$\frac{1}{2}$	$3\frac{1}{2}$	$\frac{1}{2}$	$\frac{1}{2}$	1	$\frac{1}{4}$
	6	....	..	....	....	$4\frac{1}{2}$	$\frac{5}{8}$	$\frac{5}{8}$	$1\frac{1}{4}$	$\frac{2}{8}$
	8	$\frac{3}{16}$	$\frac{5}{16}$	$1\frac{5}{16}$	$\frac{9}{16}$	5	..	..	..	..
	10	....	..	....	....	6	..	..	..	..
	12	...	..	$1\frac{11}{16}$	$\frac{13}{16}$	$6\frac{1}{2}$	..	..	..	..
16	4	$\frac{5}{32}$ +	$\frac{1}{4}$	$1\frac{2}{8}$	$\frac{9}{16}$	$3\frac{1}{2}$	$\frac{1}{2}$	$\frac{1}{2}$	1	$\frac{1}{4}$
	6	....	..	....	....	$4\frac{1}{2}$	$\frac{5}{8}$	$\frac{2}{4}$	$1\frac{1}{4}$	$\frac{2}{8}$
	8	$\frac{3}{16}$ +	$\frac{5}{16}$	$1\frac{7}{16}$	$\frac{5}{8}$	5	..	..	..	..
	10	....	..	....	....	6	..	..	..	..
	12	$\frac{7}{32}$	$\frac{11}{32}$	....	....	$6\frac{1}{2}$	$\frac{2}{4}$	..	..	..
	16	....	..	$1\frac{7}{8}$	$\frac{15}{16}$	$8\frac{1}{4}$	$\frac{7}{8}$	$\frac{2}{4}$	$1\frac{2}{4}$	..
18	4	$\frac{9}{16}$	$\frac{5}{16}$	$1\frac{5}{16}$	$\frac{9}{16}$	4	$\frac{5}{8}$	$\frac{5}{8}$	$1\frac{1}{4}$	$\frac{2}{8}$
	6	....	..	....	....	$4\frac{1}{2}$	..	..	..	..
	8	$\frac{7}{32}$	$\frac{11}{32}$	$1\frac{1}{2}$	$\frac{11}{16}$	$5\frac{1}{2}$	$\frac{2}{4}$	..	..	..
	10	....	..	....	....	6	..	..	..	..
	12	....	..	....	....	$7\frac{1}{4}$	$\frac{7}{8}$	$\frac{2}{4}$	$1\frac{2}{8}$	..
	16	$\frac{1}{4}$	$\frac{2}{8}$	$2\frac{1}{4}$	$1\frac{1}{4}$	8	..	..	..	..
	20	....	..	....	....	9	..	..	..	..
20	4	$\frac{3}{16}$ +	$\frac{5}{16}$	$1\frac{2}{8}$	$\frac{5}{8}$	4	$\frac{5}{8}$	$\frac{5}{8}$	$1\frac{1}{4}$	$\frac{2}{8}$
	6	....	..	....	....	$4\frac{1}{2}$	..	..	..	..
	8	....	..	....	....	5	$\frac{2}{4}$	..	..	..
	10	$\frac{7}{32}$	$\frac{11}{32}$	$1\frac{5}{8}$	$\frac{2}{4}$	6	..	..	..	..
	12	....	..	....	....	7	..	..	..	..
	16	$\frac{2}{32}$	$\frac{7}{16}$	$2\frac{1}{4}$	$1\frac{1}{8}$	8	$\frac{7}{8}$	$\frac{2}{4}$	$1\frac{2}{4}$	..
	20	....	..	....	....	10	1	..	..	..

TABLE 52.—*Continued.*

Diameter.	Face.	Rim.		Arm.		Hub.		Boss.		
		A	B	C	D	E	F	G	H	I
22	4	$\frac{3}{16}$	$\frac{5}{16}$	$1\frac{1}{2}$	$\frac{5}{8}$	4	$\frac{5}{8}$	$\frac{5}{8}$	$1\frac{1}{4}$	$\frac{8}{8}$
	6	....	..	....	....	$4\frac{1}{2}$	$\frac{8}{4}$	..	..	..
	8	....	..	....	....	5	....	..	..	..
	10	$\frac{7}{32}$ +	$\frac{11}{32}$	$1\frac{3}{4}$	$\frac{13}{16}$	$6\frac{1}{2}$	....	..	..	..
	12	....	..	....	....	....	$\frac{7}{8}$	$\frac{8}{4}$	$1\frac{3}{8}$	..
	16	....	..	....	....	$8\frac{3}{4}$	1	..	..	..
	20	$\frac{9}{32}$ +	$\frac{7}{16}$	$2\frac{1}{2}$	$1\frac{1}{4}$	11	$1\frac{1}{8}$	$\frac{7}{8}$	$1\frac{1}{2}$	..
24	4	$\frac{7}{32}$	$\frac{11}{32}$	$1\frac{9}{16}$	$\frac{11}{16}$	4	$\frac{5}{8}$	$\frac{5}{8}$	$1\frac{1}{4}$	$\frac{8}{8}$
	6	....	..	....	....	$4\frac{3}{4}$	$\frac{8}{4}$	..	..	..
	8	....	..	....	....	$5\frac{1}{2}$	....	..	..	..
	10	$\frac{1}{4}$	$\frac{8}{8}$	$1\frac{7}{8}$	....	7	$\frac{7}{8}$	$\frac{8}{4}$	$1\frac{3}{8}$	..
	12	....	..	....	....	....	....	..	..	..
	16	....	..	....	....	$9\frac{1}{2}$	1	..	..	..
	20	$\frac{5}{16}$	$\frac{15}{32}$	$2\frac{3}{4}$	$1\frac{3}{8}$	....	$1\frac{1}{8}$	$\frac{7}{8}$	$1\frac{1}{2}$	..
	24	....	..	....	....	11	....	..	..	..
26	4	$\frac{7}{32}$	$\frac{11}{32}$	$1\frac{11}{32}$	$\frac{3}{4}$	$4\frac{1}{4}$	$\frac{3}{4}$	$\frac{5}{8}$	$1\frac{1}{4}$	$\frac{8}{8}$
	6	....	..	....	....	5	....	..	..	..
	8	....	..	....	....	6	$\frac{7}{8}$	$\frac{8}{4}$	$1\frac{3}{8}$	..
	10	$\frac{1}{4}$	$\frac{8}{8}$	2	$\frac{7}{8}$	7	....	..	..	..
	12	....	..	....	....	$7\frac{1}{2}$	....	..	..	..
	16	....	..	....	....	10	$1\frac{1}{8}$	$\frac{7}{8}$	$1\frac{1}{2}$	..
	20	$\frac{5}{16}$ +	$\frac{15}{32}$	$2\frac{15}{16}$	$1\frac{7}{16}$	$10\frac{1}{2}$	....	..	..	..
	24	....	..	....	....	11	....	..	..	..
28	4	$\frac{7}{32}$ +	$\frac{15}{32}$	$1\frac{3}{4}$	$\frac{3}{4}$	$4\frac{1}{2}$	$\frac{3}{4}$	$\frac{5}{8}$	$1\frac{1}{4}$	$\frac{8}{8}$
	6	....	..	....	....	$5\frac{1}{2}$	$\frac{7}{8}$	$\frac{8}{4}$	$1\frac{3}{8}$	..
	8	....	..	....	....	7	....	..	..	..
	10	....	..	....	....	$7\frac{1}{2}$	....	..	..	..
	12	$\frac{1}{4}$ +	$\frac{3}{8}$	$2\frac{1}{8}$	$\frac{13}{16}$	8	1	..	..	..
	16	....	..	....	....	10	....	..	..	..
	20	$\frac{5}{16}$	$\frac{15}{32}$	....	....	11	$1\frac{1}{8}$	$\frac{7}{8}$	$1\frac{1}{2}$	..
	24	$\frac{11}{32}$	$\frac{1}{2}$	$3\frac{1}{2}$	$1\frac{1}{2}$	....	....	..	..	..
30	4	$\frac{7}{32}$ +	$\frac{11}{32}$	$1\frac{7}{8}$	$\frac{13}{16}$	$4\frac{1}{2}$	$\frac{3}{4}$	$\frac{5}{8}$	$1\frac{1}{4}$	$\frac{8}{8}$
	6	....	..	....	....	$5\frac{1}{2}$	$\frac{7}{8}$	..	..	..
	8	....	..	....	....	$6\frac{1}{4}$	....	$\frac{3}{4}$	$1\frac{3}{8}$	..
	10	....	..	....	....	$6\frac{1}{2}$	....	..	..	..
	12	$\frac{9}{32}$	$\frac{7}{16}$	$2\frac{1}{4}$	1	8	1	..	..	..
	16	....	..	....	....	$8\frac{1}{2}$	....	..	..	..
	20	....	..	....	....	$11\frac{1}{2}$	$1\frac{1}{4}$	$\frac{7}{8}$	$1\frac{1}{2}$	..
	24	$\frac{3}{8}$	$\frac{9}{16}$	$3\frac{5}{16}$	$1\frac{5}{8}$	13	....	..	..	..
32	4	$\frac{1}{4}$ +	$\frac{3}{8}$	$2\frac{1}{8}$	$\frac{15}{16}$	$4\frac{1}{2}$	$\frac{7}{8}$	$\frac{3}{4}$	$1\frac{3}{8}$	$\frac{8}{8}$
	6	....	..	....	....	$5\frac{1}{2}$	....	..	..	..
	8	....	..	....	....	$6\frac{1}{2}$	1	..	..	..
	10	....	..	....	....	$7\frac{1}{2}$	....	..	..	..
	12	$\frac{5}{16}$	$\frac{15}{32}$	$2\frac{7}{16}$	$1\frac{1}{16}$	8	$1\frac{1}{8}$	$\frac{7}{8}$	$1\frac{1}{2}$	..
	16	....	..	....	....	$9\frac{1}{2}$	....	..	..	..
	20	....	..	....	....	11	$1\frac{1}{4}$	..	..	..
	24	....	..	....	....	13	....	..	..	..

TABLE 52.—*Continued.*

Diameter.	Face.	Rim.		Arm.		Hub.		Boss.		
		A	B	C	D	E	F	G	H	I
34	4	$\frac{1}{4}$ +	$\frac{3}{8}$	$2\frac{1}{8}$	$\frac{15}{16}$	$4\frac{1}{2}$	$\frac{7}{8}$	$\frac{3}{4}$	$1\frac{3}{8}$	$\frac{3}{8}$
	6	....	..	....	....	$5\frac{1}{2}$	..	..	..	..
	8	....	..	....	....	$6\frac{1}{2}$	1	..	..	..
	10	....	..	....	....	$7\frac{1}{4}$	..	..	..	..
	12	$\frac{5}{16}$	$\frac{15}{32}$	$2\frac{7}{16}$	$1\frac{1}{16}$	$7\frac{3}{4}$	$1\frac{1}{8}$	$\frac{7}{8}$	$1\frac{1}{2}$	..
	16	....	..	....	....	$9\frac{1}{2}$	..	..	..	..
	20	....	..	....	....	12	$1\frac{1}{4}$	..	..	..
	24	....	..	....	....	13	..	..	..	..
36	4	$\frac{1}{4}$+	$\frac{3}{8}$	$2\frac{3}{16}$	$\frac{15}{16}$	$4\frac{1}{2}$	$\frac{7}{8}$	$\frac{3}{4}$	$1\frac{3}{8}$	$\frac{3}{8}$
	6	....	..	....	....	$5\frac{1}{2}$	..	..	..	..
	8	....	..	....	....	$6\frac{3}{4}$	..	..	..	..
	10	....	..	....	....	$7\frac{1}{4}$	..	..	..	..
	12	$\frac{5}{16}$	$\frac{15}{32}$	....	....	$7\frac{3}{4}$	$1\frac{1}{8}$	$\frac{7}{8}$	$1\frac{1}{2}$	..
	16	....	..	$2\frac{9}{16}$	$1\frac{1}{8}$	$10\frac{1}{4}$	$1\frac{1}{4}$	..	..	..
	20	....	..	....	....	12	..	..	..	..
	24	....	..	....	....	$13\frac{1}{2}$	$1\frac{3}{8}$	1	$1\frac{3}{4}$	$\frac{1}{2}$
40	8	$\frac{5}{16}$	$\frac{15}{32}$	$2\frac{5}{16}$	1	$6\frac{3}{4}$	1	$\frac{3}{4}$	$1\frac{3}{8}$	$\frac{3}{8}$
	12	....	..	....	....	$7\frac{3}{4}$	$1\frac{1}{8}$	$\frac{7}{8}$	$1\frac{1}{2}$	..
	16	$\frac{11}{32}$	$\frac{1}{2}$	$2\frac{3}{4}$	$1\frac{1}{4}$	10	$1\frac{1}{4}$	..	..	..
	20	....	..	....	....	$11\frac{1}{2}$	$1\frac{3}{8}$	1	$1\frac{3}{4}$	$\frac{1}{2}$
	24	....	..	....	....	$15\frac{1}{4}$	$1\frac{1}{2}$	..	..	..
44	8	$\frac{9}{32}$	$\frac{7}{16}$	$2\frac{1}{2}$	$1\frac{1}{4}$	$6\frac{3}{4}$	$1\frac{1}{8}$	$\frac{7}{8}$	$1\frac{1}{2}$	$\frac{3}{8}$
	12	....	..	....	....	8	..	..	..	..
	16	$\frac{11}{32}$	$\frac{1}{2}$	3	$1\frac{5}{16}$	10	$1\frac{1}{4}$	..	..	..
	20	....	..	....	....	12	$1\frac{3}{8}$	1	$1\frac{3}{4}$	$\frac{1}{2}$
	24	....	..	$3\frac{1}{2}$	....	15	$1\frac{1}{2}$	..	..	..
48	8	$\frac{9}{32}$+	$\frac{7}{16}$	$2\frac{3}{4}$	$1\frac{3}{4}$	$7\frac{1}{2}$	$1\frac{1}{8}$	$\frac{7}{8}$	$1\frac{1}{2}$	$\frac{3}{8}$
	12	....	..	....	....	$8\frac{3}{4}$	$1\frac{1}{4}$	..	..	..
	16	$\frac{3}{8}$	$\frac{9}{16}$	$3\frac{1}{4}$	$1\frac{7}{16}$	10	$1\frac{3}{8}$	1	$1\frac{3}{4}$	$\frac{1}{2}$
	20	....	..	....	....	12	..	..	..	..
	24	....	..	....	....	15	$1\frac{1}{2}$	..	..	..
54	12	$\frac{5}{16}$+	$\frac{15}{32}$	3	$1\frac{5}{16}$	$9\frac{3}{4}$	$1\frac{3}{8}$	1	$1\frac{3}{4}$	$\frac{1}{2}$
	16	....	..	....	....	$11\frac{1}{4}$	$1\frac{1}{2}$	..	..	..
	20	$\frac{13}{32}$	$\frac{19}{32}$	$3\frac{5}{8}$	$1\frac{5}{8}$	....	..	..	..	..
	24	....	..	....	....	15	$1\frac{3}{4}$	$1\frac{1}{4}$	2	..
60	12	$\frac{11}{32}$	$\frac{1}{2}$	$3\frac{5}{16}$	$1\frac{7}{16}$	10	$1\frac{3}{8}$	1	$1\frac{3}{4}$	$\frac{1}{2}$
	16	....	..	....	....	$11\frac{1}{4}$	$1\frac{1}{2}$	..	..	..
	20	$\frac{7}{16}$	$\frac{5}{8}$	$3\frac{13}{16}$	$1\frac{3}{4}$	$12\frac{1}{2}$	$1\frac{3}{4}$	$1\frac{1}{4}$	2	..
	24	....	..	....	....	15	..	..	..	..
66	12	$\frac{11}{32}$	$\frac{1}{2}$	$3\frac{9}{16}$	$1\frac{9}{16}$	10	$1\frac{1}{2}$	1	$1\frac{3}{4}$	$\frac{1}{2}$
	16	....	..	....	....	$11\frac{1}{2}$	$1\frac{3}{8}$	$1\frac{1}{4}$	2	..
	20	$\frac{1}{2}$	$\frac{3}{4}$	$4\frac{1}{4}$	$1\frac{15}{16}$	$13\frac{1}{2}$	$1\frac{7}{8}$	..	..	..
	24	....	..	....	....	15	..	..	..	..
72	12	$\frac{3}{8}$	$\frac{9}{16}$	$3\frac{7}{8}$	$1\frac{11}{16}$	$10\frac{1}{2}$	$1\frac{5}{8}$	$1\frac{1}{4}$	2	$\frac{1}{2}$
	16	....	..	....	....	$12\frac{1}{2}$	$1\frac{3}{4}$	..	..	..
	20	$\frac{9}{16}$	$\frac{13}{16}$	$4\frac{5}{8}$	$2\frac{1}{16}$	$13\frac{1}{2}$	$1\frac{7}{8}$	..	..	..
	24	....	..	....	....	15	2	..	..	..

2048. Examples of Belt Pulleys.—Table 52 gives the dimensions of a set of cast-iron belt pulleys ranging from 6″ to 72″ in diameter, as made by a well-known manufac-

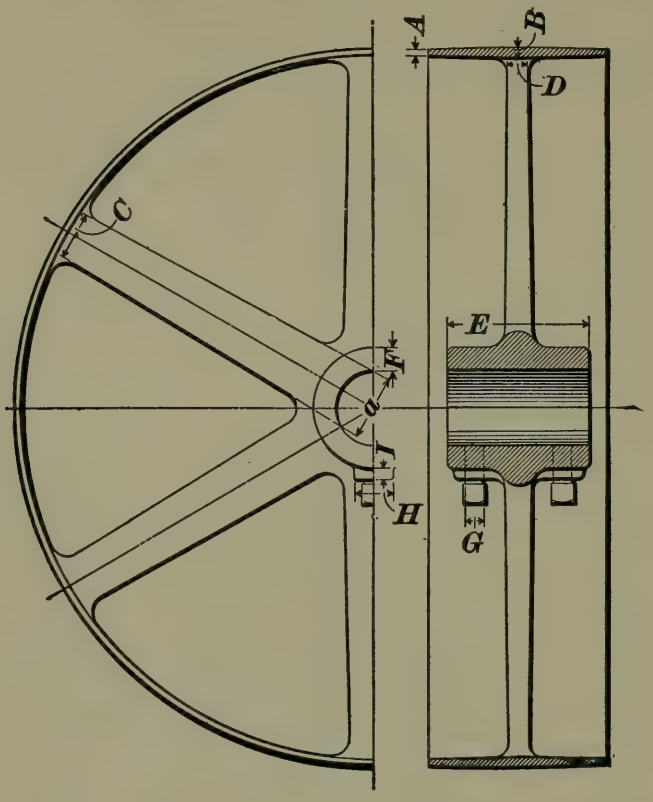

FIG. 720.

turing company. These pulleys are so designed that the number of patterns may be kept within reasonable limits, and at the same time have the dimensions correspond as nearly as possible with well-established rules.

The letters over the columns of dimensions given in the table correspond to the letters in Fig. 720.

In all cases the number of arms is 6, and the arms increase in size towards the hub with a taper of $\frac{1}{2}$″ per foot.

2049. Counterbalance.—Pulleys that run at high speeds must be carefully balanced, i. e., the center of gravity of the pulley must correspond with the center of the shaft, otherwise there will be a heavy stress on the shaft and bearings. Since it is seldom possible to make the pulley

exactly symmetrical, the difference in weight of the heavy side is compensated for by weights riveted to the inside of the rim on the light side.

ROPE BELTING.

2050. There is a growing tendency towards the substitution of hemp and cotton ropes for belting and line shaft-

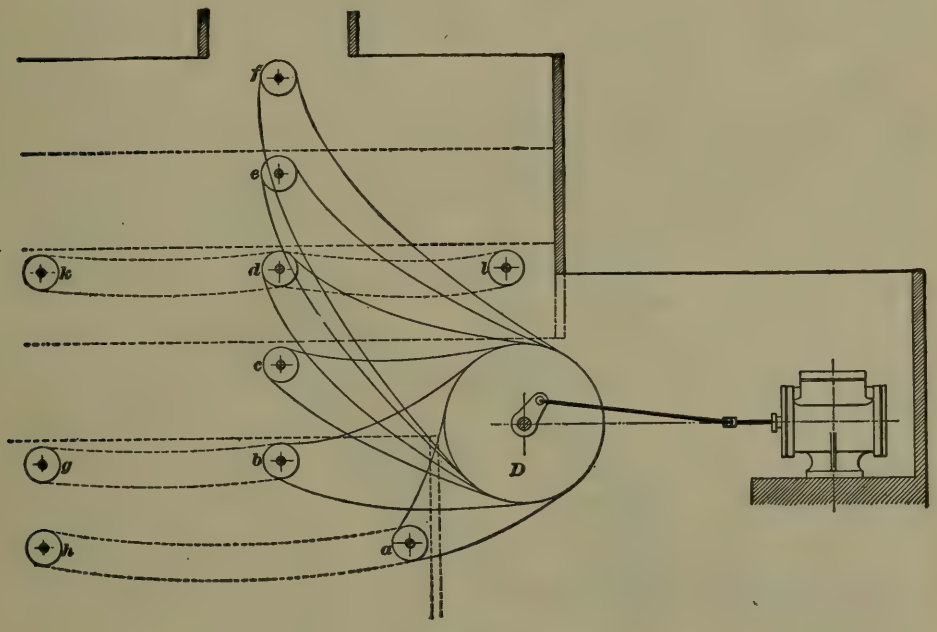

FIG. 721.

ing as a means of transmitting power in large factories and shops. The advantages claimed for the rope-driving system are :

1. Economy ; for a rope system is cheaper to install than either leather belting or shafting.

2. In the rope system there is less loss of power by slipping.

3. Flexibility ; that is, the ease with which the power is transmitted to any distance, and in any direction.

2051. There are two systems of rope transmission in common use. In the first, the transmission is effected by several parallel independent ropes which pass around the fly-wheel of the engine and the pulley or pulleys to be driven.

Each rope is made quite taut at first, but stretches until it slips, after which it is re-spliced. A good example of a rope transmission of this character is shown in outline in Fig. 721.

The fly-wheel *D* carries 35 parallel ropes which distribute power to the pulleys *a*, *b*, *c*, *d*, *e*, and *f*, located on the five floors of the mill. The ropes are distributed as follows: *a*, 4 ropes; *b* and *c*, 5 ropes each; *d*, *e*, and *f*, 7 ropes each. A secondary system of ropes drives the pulleys *g*, *h*, *k*, and *l*.

2052. In the second system of rope transmission, a single rope is carried around the pulley as many times as is

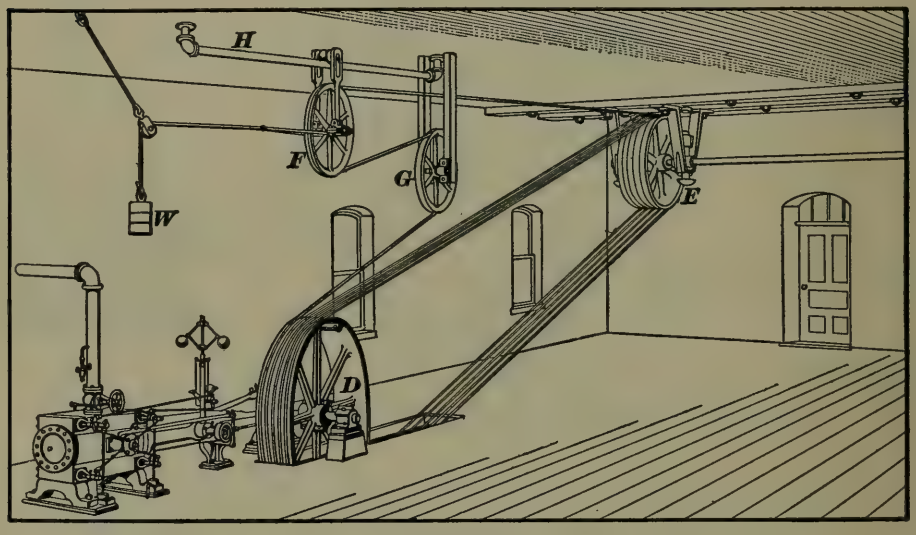

FIG. 722.

necessary to produce the required power, and the necessary tension is obtained by passing a loop of the rope around a weighted pulley. An example of this system is shown in Fig. 722.

The rope is wrapped continuously around the fly-wheel *D* and the driven pulley *E*. From the last groove of *E* the rope is led over the idlers *F* and *G*, which are set at such an angle as to lead it back to the first groove in *D*. The weight *W* is attached to the pulley *F* which is movable along the rod *H*. The movement of the pulley *F*, therefore, takes up the stretch of the rope, and keeps it always at the same tension. Rope pulleys may be attached to the shaft of the

pulley E, and the power received by E may thus be transmitted to any desired points.

The first of the above systems of transmission is used chiefly in Europe; the second, in the United States.

2053. Ropes.—The ropes used in rope transmission are either of hemp, manila, or cotton. Manila ropes are mostly used in this country. They are of three strands, hawser laid, and may be from $\frac{1}{2}$ inch to 2 inches in diameter.

The weight of ordinary manila, or cotton, rope is about $.3\ D^2$ pounds per foot of length, where D represents the diameter of the rope in inches. Letting $w =$ the weight per foot of length,

$$w = .3\ D^2. \qquad \textbf{(280.)}$$

The breaking strength of the rope varies from 7,000 to 12,000 lb. per sq. in. of cross-section. The average value may be taken as $7{,}000\ D^2$, when D is the diameter of rope.

For a continuous transmission, it has been determined by experiment that the best results are obtained when the tension in the driving side of the rope is about $\frac{1}{35}$ of the breaking strength. That is,

$$T_1 = \text{tension in tight side} = \frac{7{,}000\ D^2}{35} = 200\ D^2.$$

2054. Power Transmitted by Ropes.—The ropes run in V-shaped grooves (see Fig. 724), and the coefficient of friction is, of course, greater than on a smooth surface. The coefficient for grooves with sides at an angle of 45° may be taken at from .25 to .33. The ratio $\frac{T_1}{T_2}$ will vary from $1\frac{1}{2}$ to 3, depending upon the arc of contact and coefficient of friction.

The horsepower that can be transmitted by a single rope running under favorable conditions is given by the formula

$$H = \frac{v\ D^2}{825}\left(200 - \frac{v^2}{107.2}\right). \qquad \textbf{(281.)}$$

The horsepower transmitted by ropes of different diameters running at different velocities may be calculated from formula **281**, and plotted on cross-section paper. The

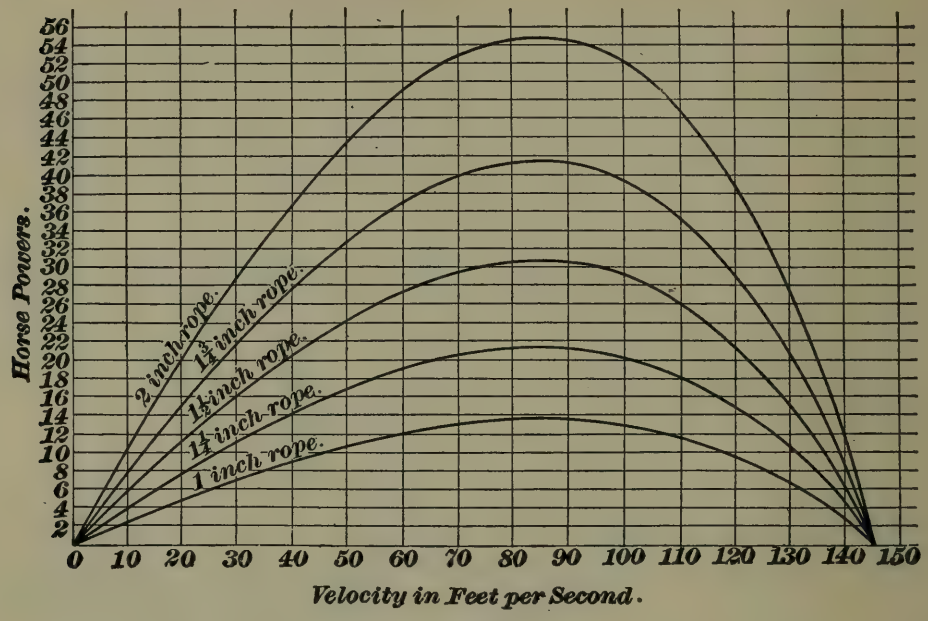

FIG. 723.

accompanying diagram (Fig. 723) shows the horsepowers transmitted by 1, $1\frac{1}{4}$, $1\frac{1}{2}$, $1\frac{3}{4}$, and 2 inch ropes for various velocities. The horizontal distances represent velocities in feet per second, and the vertical ordinates the horsepower transmitted by a single rope.

The diagram shows that the maximum power is obtained at a speed of about 84 feet per second. For higher velocities, the centrifugal force becomes so great that the power is decreased, and when the speed reaches 145 feet per second, the centrifugal force just balances the tension, so that no power at all is transmitted. Consequently, a rope should not run faster than about 5,000 feet per minute, and it is preferable, on the score of durability, to limit the velocity to 3,500 feet per minute.

EXAMPLE.—A rope fly-wheel is 26 feet in diameter, and makes 55 revolutions per minute. The wheel is grooved for 35 turns of $1\frac{1}{4}$-inch rope. What horsepower may be transmitted?

SOLUTION.—Velocity per second =

$$v = \frac{26 \times \pi \times 55}{60} = \frac{4{,}492}{60} = 74.9 \text{ feet.}$$

Then, from formula **281,**

$$H = \frac{v\,D^2}{825}\left(200 - \frac{v^2}{107.2}\right) = \frac{74.9 \times (1\frac{1}{2})^2}{825}\left(200 - \frac{(74.9)^2}{107.2}\right) = 30.16,$$

the horsepower transmitted by one rope or turn. Then, $30.16 \times 35 =$ 1,055.6 = horsepower transmitted by the 35 ropes. Ans.

Practically the same result may be obtained by referring to the diagram. It will be seen that for $1\frac{1}{2}$-inch rope running 74.9 feet per second, the horsepower per rope is slightly over 30; hence, the total horsepower is $30 \times 35 = 1{,}050$, nearly.

EXAMPLE.—How many times should a $1\frac{3}{4}$-inch rope be wrapped around a grooved wheel in order to transmit 400 horsepower, the speed being 3,500 feet per minute?

SOLUTION.—3,500 ft. per min. $= \frac{3{,}500}{60} = 58\frac{1}{3}$ ft. per sec. Referring to the diagram, a $1\frac{3}{4}$-inch rope running at a speed of $58\frac{1}{3}$ ft. per sec. transmits $36\frac{3}{4}$ horsepower. Hence, the number of turns should be $\frac{400}{36\frac{3}{4}} = 11$, nearly. Ans.

2055. Pulleys for rope gearing differ from ordinary pulleys in having a grooved rim. The sides of the groove are inclined at an angle which may vary from 30° to 60°.

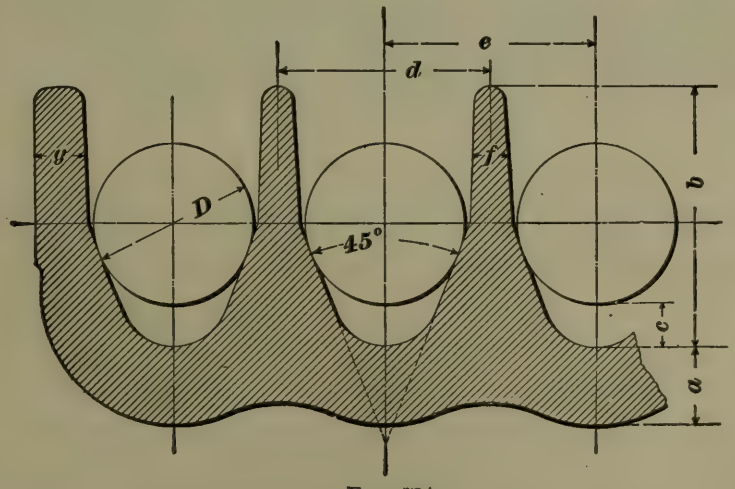

FIG. 724.

The weight of the rope wedges it into the angle of the groove, and, therefore, the more acute the angle the greater

is the coefficient of friction, and likewise the wear of the rope. The general practice, at present, is to make the angle between the sides 45°. The grooves are made circular at the bottom, and are polished or smoothed to avoid wearing the rope. A section of what is known as the English form of grooved rim is shown in Fig. 724. The following proportions may be used:

D = diameter of rope in inches.

$a = \frac{1}{2} D.$	$e = \frac{4}{3} D.$
$b = 1\frac{5}{8} D.$	$f = \frac{1}{4} D.$
$c = \frac{1}{4} D.$	$g = f + \frac{1}{4}''.$
$d = \frac{4}{3} D.$	

A section of a grooved rim, in which the sides of the grooves are formed with circular arcs, is shown in Fig. 725.

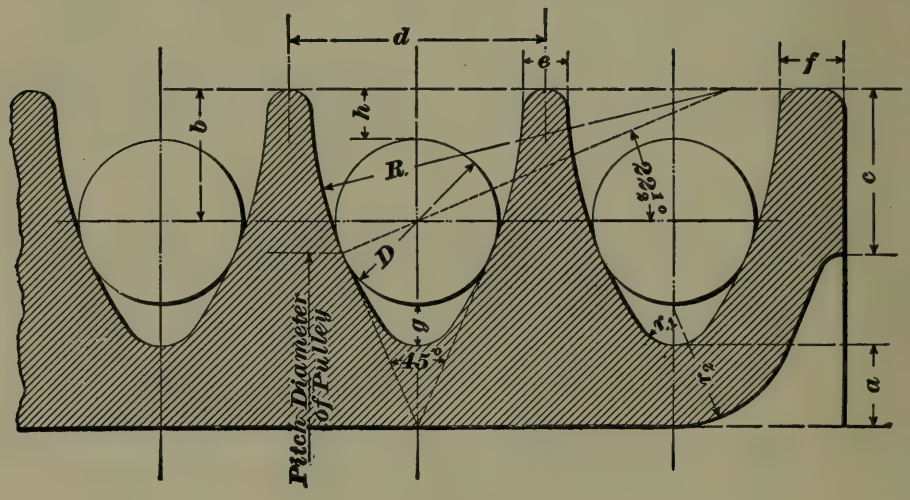

FIG. 725.

The proportions for this rim are as follows, using the diameter D of the rope as a unit:

$a = \frac{1}{2} D.$	$e = \frac{1}{4} D + \frac{1}{16}''.$
$b = \frac{3}{4} D + \frac{1}{16}''.$	$f = \frac{1}{4} D + \frac{3}{16}''.$
$c = D.$	$g = \frac{1}{3} D.$
$d = 1.6\, D.$	$h = \frac{1}{4} D + \frac{1}{16}''.$

r_1 and r_2 are to be found by trial; they should be of such lengths as to make the curves drawn by them tangent to the required lines.

The long radius R is determined by drawing a line through the center of the rope at an angle of $22\frac{1}{2}°$ with the horizontal, and producing it until it intersects a line drawn through the tops of the dividing ribs; then, with this point of intersection as a center, draw the curve forming the side of the groove tangent to the circumference of the rope.

The advantage claimed for this groove is that the rope will turn more freely in it, thus presenting new sets of fibers to the sides of the grooves, and increasing the life of the rope.

2056. Guide pulleys, idlers, and tension pulleys do not have V grooves, but the rope rests upon the bottom of a circular groove, as shown in Fig. 726.

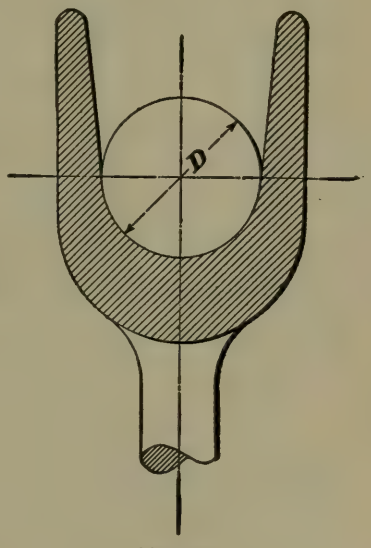

FIG. 726.

2057. The diameter of a rope pulley should be at least 30 times the diameter of the rope. Good results are obtained when the diameters of pulleys and idlers on the driving side are 40 times, and those on the driven side 30 times the rope diameter. Idlers used simply to support a long span may have diameters as small as 18 rope diameters, without injuring the rope.

When possible, the lower side of the rope should be the driving side, for in that case the rope embraces a greater portion of the circumference of the pulley, and increases the arc of contact.

When the continuous system of rope transmission is used, the tension pulley should act on as large an amount of rope as possible. It is good practice to use a tension pulley and carriage for every 1,200 feet of rope, and have at least 10 per cent. of the rope subjected directly to the tension.

Aside from the grooved rim, rope pulleys are constructed the same as other pulleys. They may be cast solid, in halves

or in sections. The pulley grooves must be turned to exactly the same diameter; otherwise, the rope will be severely strained.

WIRE-ROPE GEARING.

2058. Telodynamic Transmission.—This name is applied to the method of transmitting power by means of wire ropes and pulleys. The method was introduced on the continent of Europe, in 1850, by C. F. Hirn, and has proven very successful and economical. Power may be transmitted great distances with very little loss.

The telodynamic transmission is very simple. It consists of driving and driven pulleys connected by a wire rope running at high velocity. When the distance is very great (sometimes several miles), relay pulleys are placed every 400 to 500 feet. The driving pulley then drives the first relay pulley, which in turn drives the second, and so on, there being a separate rope for each relay. A single rope, however, may be used over a distance of 1,000 to 2,000 feet by supporting it by guide pulleys, as shown in Fig. 727. The guide pulleys should be not more than 500 feet apart.

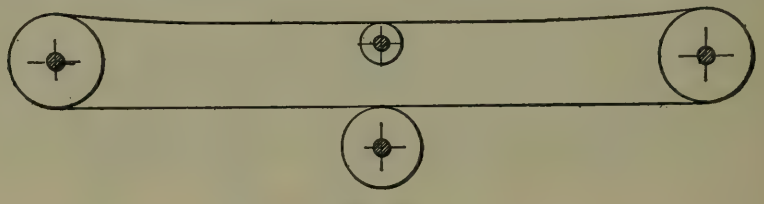

FIG. 727.

The diameter of the guide pulley in the driving side of the rope should be equal to that of the driving pulley, while the diameter of the pulley supporting the slack side may be half as great.

The pulleys are fixed to wood, iron, or masonry supports which are high enough to prevent the rope from dragging on the ground.

2059. The wire rope used for transmitting power is usually composed of 6 strands twisted around a hemp core. Each strand is composed of either 7 wires or 6 wires, and a

central hemp core. The number of strands, and wires to the strand, may be varied at pleasure.

Calling D the diameter of the rope, that is, the diameter of a ring that would just fit over the rope, and d the diameter of a single wire, we have for the ordinary rope of 42 wires,

$$D = 9\ d, \text{ or } d = \frac{D}{9}. \qquad \textbf{(282.)}$$

The weight of wire rope per foot equals

$$w = 1.43\ D^2, \text{ nearly.} \qquad \textbf{(283.)}$$

EXAMPLE.—What is the diameter of the wire composing a $\frac{5}{8}$-inch wire rope containing 42 wires, and what is its weight per foot?

SOLUTION.—$d = \frac{D}{9} = \frac{\frac{5}{8}}{9} = .07''$, nearly, or about No. 13 Brown & Sharpe's wire gauge. Ans.

Weight per foot $= 1.43\ D^2 = 1.43 \times (\frac{5}{8})^2 = .56$ lb. Ans.

The total stress allowable in a rope of iron wires may be taken at about 25,000 lb. per sq. in.; the stress in ropes of steel wire may be taken at 28,000 lb. per sq. in.

In calculating the cross-section of a rope, the sum of the cross-sections of the individual wires must be taken; thus, if n is the number of wires in the rope, the cross-section is

$$\frac{\pi}{4} d^2\ n, \text{ not } \frac{\pi}{4} D^2.$$

2060. Tensions in a Suspended Rope.—A perfectly flexible rope suspended between two points, as, for example, a wire rope suspended between two pulleys, hangs in a curve called the **catenary.** When, however, the deflection is not very great, as is usually the case in wire-rope transmission, the curve is very nearly a true parabola.

2061. In designing a wire-rope transmission, it is required to know the distance the rope will hang below the points of suspension, i. e., the **deflection** of the rope, and the tension in the rope at the pulleys.

In Fig. 728, let $A\ C\ B$ be a rope hanging from the points A and B, which are supposed to be at the same elevation;

then the tension at A or B is given by the formula

$$T = \frac{w\,a^2}{2\,h} + w\,h, \qquad \textbf{(284.)}$$

where w is the weight of the rope per foot of its length,

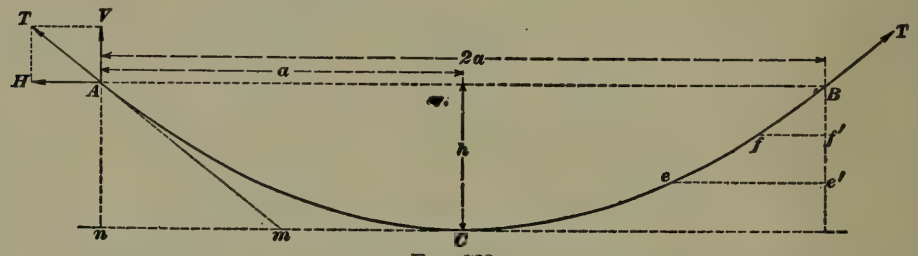

FIG. 728.

$a = \frac{1}{2}$ the distance in *feet* between the points of support, and h is the deflection in *feet* at the lowest point of the rope.

EXAMPLE.—The total distance between two rope pulleys is 400 ft., and the deflection at the center of the rope is 10 ft. Supposing the rope to weigh 1 lb. per ft., find the tension at the pulleys due to the weight of the rope.

SOLUTION.—$a = 400 \div 2 = 200$; $h = 10$; $w = 1$.

By formula **284**, we have

$$T = \frac{w\,a^2}{2\,h} + w\,h = \frac{1 \times (200)^2}{20} + 1 \times 10 = 2{,}010 \text{ lb.} \quad \text{Ans.}$$

2062. If we solve formula **284** for h, we obtain

$$h = \frac{T}{2\,w} - \sqrt{\frac{T^2}{4\,w^2} - \frac{a^2}{2}}. \qquad \textbf{(285.)}$$

This formula may be used to find the deflection when the tension, weight of rope, and span are known.

2063. Stresses in a Wire Rope.—A wire rope when transmitting power is subjected to three different stresses:

1. The stress due to the direct longitudinal tension which depends upon the span, power transmitted, and weight of rope.

2. A stress caused by bending the wire around the convex portion of the pulley or sheave.

3. Stress due to centrifugal force.

The values of these stresses are expressed by the following formulas: The stress per square inch due to direct tension is

$$S_t = \frac{\frac{w a^2}{2 h} + w h}{\frac{\pi}{4} d^2 n} = \frac{2 w(a^2 + 2 h^2)}{\pi d^2 n h}. \qquad \textbf{(286.)}$$

The stress per square inch due to bending around the pulley equals

$$S_b = \frac{E_1 d}{2 R}, \qquad \textbf{(287.)}$$

where E_1 is the coefficient of elasticity of the material composing the wire (see Art. **1352**), d = diameter of wire composing the rope, and R = radius of pulley in inches.

The stress per square inch due to centrifugal force is

$$S_c = \frac{w v^2}{\frac{\pi}{4} g d^2 n} = \frac{4 w v^2}{\pi d^2 n g}, \qquad \textbf{(288.)}$$

where v = velocity of rope in feet per second, and $g = 32.16$.

The total stress per square inch is the sum of these stresses, and is equal to

$$S = S_t + S_b + S_c = \frac{2 w(a^2 + 2 h^2)}{\pi d^2 n h} + \frac{E_1 d}{2 R} + \frac{4 w v^2}{\pi d^2 n g}. \qquad \textbf{(289.)}$$

This total stress S should not exceed

25,000 lb. per sq. in. for wrought iron;
28,000 lb. per sq. in. for steel.

2064. Ratio of Tensions.—With long-rope transmissions the arc of contact does not vary much from 180°, and the coefficient of friction may be taken as about .22. With these conditions the tension T_1 on the driving side is about twice the tension T_2 on the slack side; i. e., $T_2 = \frac{1}{2} T_1$, therefore, the driving force $P = T_1 - T_2 = T_1 - \frac{1}{2} T_1 = \frac{1}{2} T_1 = T_2$.

The horsepower transmitted is

$$H = \frac{P v}{550} = \frac{P V}{33{,}000}.$$

One or two examples will serve to illustrate the use of the above equations and formulas.

EXAMPLE.—Power is transmitted by an iron wire rope containing 42 wires No. 15 B. & S. wire gauge, or .057 inch in diameter. The pulleys are 11 feet in diameter, and the rope runs at a speed of 4,800 feet per minute. The distance between pulleys is 400 feet. Find the horsepower transmitted, and the deflections of both tight and driving sides of rope.

SOLUTION.—The stress due to bending is

$$S_b = \frac{E_1 d}{2R}.$$

For iron E_1 is about 25,000,000. Hence,

$$S_b = \frac{25{,}000{,}000 \times .057}{2 \times \frac{11 \times 12}{2}} = 10{,}795 \text{ lb. per sq. in.}$$

Diameter of rope is, by formula **282**,

$$D = 9\,d = 9 \times .057 = .513''.$$

Weight of rope per foot is, by formula **283**,

$$w = 1.43\,D^2 = 1.43 \times .513^2 = .3764 \text{ lb.}$$

Stress due to centrifugal force is

$$S_c = \frac{4\,w\,v^2}{\pi\,d^2\,n\,g} = \frac{4 \times .3764 \times \left(\frac{4{,}800}{60}\right)^2}{3.1416 \times .057^2 \times 42 \times 32.16} = 699 \text{ lb. per sq. in.}$$

S_t can not be calculated by formula **286**, as the value of h is not known; but from formula **289**,

$$S_t = S - (S_b + S_c),$$

and since S must not exceed 25,000 for wrought iron,

$$S_t = 25{,}000 - (10{,}795 + 699) = 13{,}506 \text{ lb. per sq. in.}$$

T_1 = maximum tension on driving side $= \frac{\pi}{4} d^2\,n\,S_t =$

$$.7854 \times .057^2 \times 42 \times 13{,}506 = 1{,}448 \text{ lb.}$$

$T_2 = \frac{1}{2}\,T_1 = 724$ lb.; P = driving force $= T_2 = 724$ lb.

$$H = \text{horsepower} = \frac{P\,V}{33{,}000} = \frac{724 \times 4{,}800}{33{,}000} = 105.3. \quad \text{Ans.}$$

For the deflection, we may use formula **285**,

$$h = \frac{T_1}{2\,w} - \sqrt{\frac{T_1^2}{4\,w^2} - \frac{a^2}{2}}.$$

The deflection of the driving side is, taking w as $\frac{8}{8}$,

$$h = \frac{1{,}448}{2 \times \frac{8}{8}} - \sqrt{\frac{1{,}448^2}{4 \times (\frac{8}{8})^2} - \frac{(200)^2}{2}} = 5 \text{ ft.} \quad \text{Ans.}$$

The deflection of the driven side is

$$h = \frac{724}{2 \times \frac{8}{8}} - \sqrt{\frac{724^2}{4 \times (\frac{8}{8})^2} - \frac{(200)^2}{2}} = 10.4 \text{ ft.} \quad \text{Ans.}$$

In order to solve the converse problem, that is, find the necessary size of a wire rope to safely transmit a given horsepower, some assumptions must be made. In the first place, the stress due to bending can not be found directly, since the diameter of the wire is unknown. We may, however, assume a ratio for $\frac{R}{d}$, and after finding the size of the wire required, the radius of the pulley is at once known. This ratio of $\frac{R}{d}$ varies from 600 to 1,400. When $\frac{R}{d} = 850$ for iron wire, the pulley diameter will be smaller than for any other ratio. The ratio should, however, be as great as the conditions will allow, for the larger the pulley for a given diameter of wire, the greater is the durability of the rope.

If the value of S_c, the stress due to the centrifugal force, be taken into account, it will complicate the solution very much; in fact, the only method of solution will be a cut-and-try method. As S_c is small in comparison with S_b or S_t for reasonable values of v, it may be neglected, and the diameter of the wire calculated as in the next example. If greater exactness is desired, substitute this value of d in formula **288**; calculate the value of S_c, and then re-calculate the value of d.

EXAMPLE.—Required, to find the diameter of the wires in a steel wire rope transmitting 200 horsepower at a velocity of 5,100 feet per minute; also, required, the diameter of the pulley and rope. The rope is to contain 42 wires.

SOLUTION.—The driving force equals

$$P = \frac{33{,}000\,H}{V} = \frac{33{,}000 \times 200}{5{,}100} = 1{,}294 \text{ lb.}$$

The tension on driving side equals

$$T_1 = 2\,P = 2 \times 1{,}294 = 2{,}588 \text{ lb.}$$

Assume the ratio $\frac{R}{d} = 900$; E_1 for steel $= 30{,}000{,}000$.

Then, the stress due to bending is

$$S_b = \frac{E_1\,d}{2\,R} = \frac{30{,}000{,}000}{2 \times 900} = 16{,}667 \text{ lb. per sq. in.}$$

Hence, $S_t = 28{,}000 - 16{,}667 = 11{,}333$ lb. per sq. in.

Cross-section of wires =

$$\tfrac{1}{4}\pi d^2 n = \frac{T_1}{S_t} = \frac{2{,}588}{11{,}333} = .2283 \text{ sq. in.}$$

$$d = \sqrt{\frac{.2283}{.7854 \times 42}} = .0832 \text{ in.}$$

The diameter of the rope is, therefore,

$$D = 9\,d = 9 \times .0832 = .7488, \text{ or say } \tfrac{3}{4} \text{ in.}$$

Assuming the diameter of rope to be $\frac{3}{4}'' = .75''$, as found, the weight per foot is by formula **283,**

$$w = 1.43\,D^2 = 1.43 \times .75^2 = .8044 \text{ lb.}$$

By formula **282,** $\quad d = \dfrac{D}{9} = \dfrac{.75}{9} = .0833.$

Hence, by formula **288,**

$$S_c = \frac{4 \times .8044 \times \left(\frac{5{,}100}{60}\right)^2}{3.1416 \times .0833^2 \times 42 \times 32.16} = 790.$$

And, $S_t = 28{,}000 - (16{,}667 + 790) = 10{,}543$ lb. per sq. in.

Cross-section of wires =

$$\tfrac{1}{4}\pi d^2 n = \frac{T_1}{S_t} = \frac{2{,}588}{10{,}543} = .2455 \text{ sq. in.,}$$

and

$$d = \sqrt{\frac{.2455}{.7854 \times 42}} = .0862. \quad \text{Ans.}$$

The diameter of the rope is, therefore,

$$.0862 \times 9 = .7758'', \text{ say } \tfrac{3}{4}'',$$

the same value as obtained when S_c was neglected. Ans.

Since $\dfrac{R}{d} = 900$, $R = 900\,d = 900 \times .0862 = 77.58''$, and the diameter of the pulley $= 2 \times 77.58 = 155'' = 12$ ft. $11''$. Ans.

2065. Wire ropes are used also for hoisting and hauling loads in and about mines. The calculation of the size of a wire rope for any purpose is similar to that given above. If the rope is subjected to a straight pull, and is not bent around a sheave or drum, the cross-section may be found directly from the load and allowable safe stress; that is, cross-section $= \dfrac{\text{total load on rope}}{\text{safe stress per sq. in.}}$.

When the rope is bent around a pulley or drum, the stress due to bending, that is, $S_b = \dfrac{E_1 d}{2R}$, must be subtracted from the total safe stress.

Wire ropes used for hoisting are often made with 6 strands of 19 wires each, wound around a central hemp core, making in all $6 \times 19 = 114$ wires. This rope is more flexible than the regular transmission rope, and is, therefore, injured less in passing over small pulleys; but it will not stand as much wear when dragged over rough surfaces, as the wires of which it is composed are so much smaller.

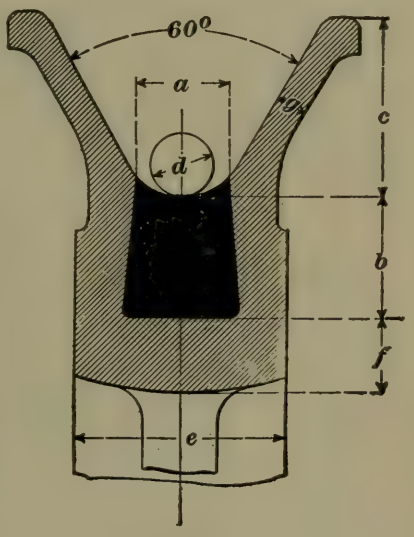

FIG. 729.

2066. Wire-Rope Pulleys.—The pulleys, or sheaves, used in wire-rope transmission are made of cast iron with a groove lined with rubber, gutta-percha, leather, or other similar substance, on which the rope runs. The grooves are made so wide that the rope rests on the rounded bottom instead of being wedged against the sides, as in the case of hemp or cotton rope.

The proportions of the pulley rim are shown in Fig. 729. They are as follows:

d = diameter of rope;

$a = d + \frac{1}{4}''$. $\quad e = 2\,d + \frac{3}{4}''$.

$b = d + \frac{1}{2}''$. $\quad f = \frac{1}{2}\,d + \frac{3}{8}''$.

$c = 3\,d$. $\quad g = \frac{1}{4}\,d + \frac{1}{8}''$.

The arms may be cross-shaped or oval; the latter form is preferable, as it offers less resistance to the air when the pulley is run at high speed. The size of the arms corresponds to those of belt pulleys transmitting the same force. For the number of arms Reuleaux gives the formula

$$n = 4 + \frac{R}{40\,D}, \qquad \textbf{(290.)}$$

where R = radius of pulley in inches and D = diameter of

rope. The diameter of the pulley is fixed by the diameter of the rope and the number of wires in a strand. For a rope with seven wires to the strand, the diameter of the pulley should not be less than 150 times the diameter of the rope; and for a rope with 19 wires to the strand, the proportion should not be less than 90 to 1.

Table 53 gives the breaking strength and the power transmitted by various sizes of ropes, as determined by practical experience:

TABLE 53.

POWER TRANSMITTED BY WIRE ROPES (42 WIRES).

Diameter of Ropes, Inches.	Diameter of Pulleys, Feet.	Revolutions per Minute.	Breaking Stress of Rope per Pound.	Horse-power Transmitted.	Velocity of Rope in Feet per Second.
$\frac{7}{16}$	5	100	4,260	8.6	26
$\frac{15}{32}$	6	100	5,660	13.4	31
$\frac{1}{2}$	7	100	8,200	21.1	36
$\frac{5}{8}$	8	100	11,600	27.5	42
$\frac{5}{8}$	8	120	11,600	33.0	50
$\frac{5}{8}$	9	100	11,600	51.9	47
$\frac{5}{8}$	9	120	11,600	62.2	56
$\frac{11}{16}$	10	100	15,200	73.0	52
$\frac{11}{16}$	10	120	15,200	87.6	62
$\frac{11}{16}$	10	140	15,200	102.2	73
$\frac{11}{16}$	12	100	15,200	116.7	63
$\frac{3}{4}$	12	120	17,600	148.9	75
$\frac{3}{4}$	12	140	17,600	173.7	87
$\frac{3}{4}$	14	100	17,600	185.0	73
$\frac{3}{4}$	14	120	17,600	222.0	87
$\frac{3}{4}$	15	120	17,600	300.0	94

NOTE.—The student may obtain much information concerning wire ropes from the trade catalogue of John A. Roebling's Sons Co., Trenton, N. J.

CHAINS.

2067. Chains may be used as simple fastenings or as belts for transmitting power. The ordinary, or open-link and the stud-link round iron chains are shown in Fig. 730. The links are made from round iron bars which are cut ofi at the proper length, bent, and welded. The links should be made as small as possible, both on account of strength and flexibility. Ordinary chain proportions are shown on the figure. They are as follows:

d = diameter of iron;

For open link $\begin{cases} a = 4\frac{1}{2}\,d \text{ to } 5\,d; \\ b = 3\frac{1}{2}\,d. \end{cases}$

For stud link $\begin{cases} a = 5\,d \text{ to } 6\,d; \\ b = 3\frac{1}{2}\,d \text{ to } 3\frac{3}{4}\,d; \\ c = .6\,d; \\ e = .7\,d. \end{cases}$

Link chains which are used merely to support loads, as in suspension bridges, etc., have the links from 3 to 9 feet or more in length. As such chains do not belong properly to the subject of Machine Design, they will not be considered here.

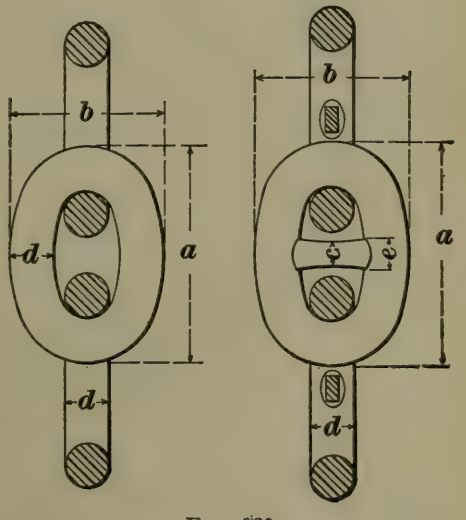

FIG. 730.

2068. Strength of Chains.—The strength of a chain is less than that of the iron composing it, on account of the weld, and also because of the presence of bending action.

Formulas **130** and **131,** Art. **1421,** may be used to find the safe load in ordinary cases. For crane chains which require a large factor of safety, Towne gives the following as the safe load:

$$P = 3.3d^2 \text{ tons} = 6{,}600\,d^2 \text{ lb.} \qquad \textbf{(291.)}$$

The *weight of chains* (open and stud link) may vary from 9 d^2 to $9\frac{1}{2}$ d^2 pounds per foot.

2069. Chain Drums.—When a chain must be coiled, as in the case of cranes and derricks, a grooved drum may be used. The groove passes spirally around the drum, and is just wide enough to receive the edge of a link of the chain. The drum may have a diameter of from 24 d to 30 d or more; the length should be such that the total amount of chain may be coiled on in one layer; because, if one layer is wound over another, the chain is injured.

Instead of a drum, a wheel or sheave with pockets may be used. Such a wheel requires less space than the drum, and injures the chain less. A form of chain wheel largely

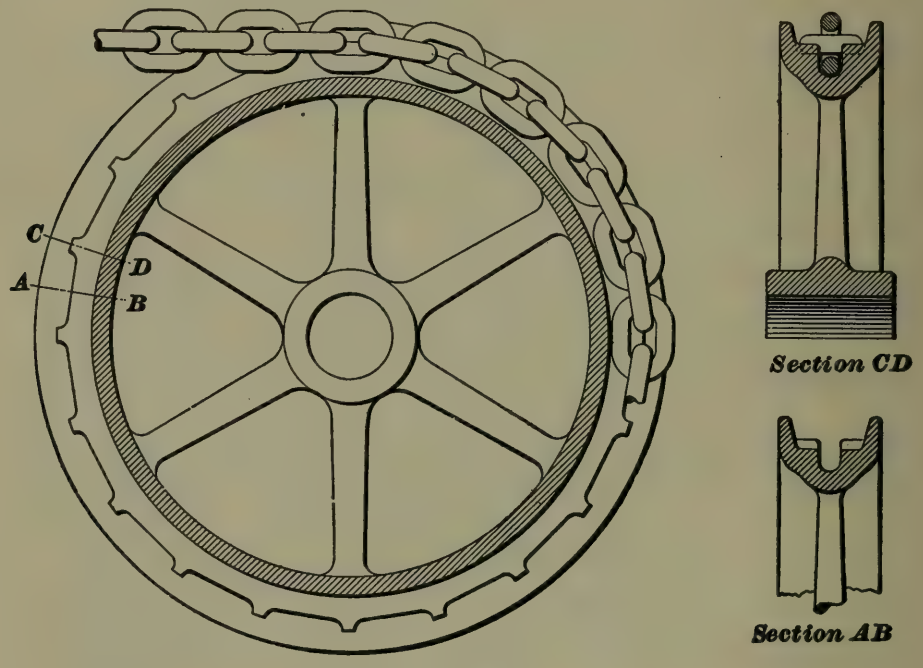

FIG. 731.

used for transmitting power, especially on cranes, chain blocks, etc., is shown in Fig. 731. The rim of the wheel is grooved for the links, and pockets are provided into which the links that lie parallel with the axis of the wheel rest.

The pitch of the pockets must, of course, be the same as the pitch of the links.

2070. Flat-link chains are used for driving machinery where very heavy resistances are to be overcome, as, for example, in wire-drawing machines, cranes, and dredging machines.

When the chain merely supports a load, it may have the form shown in Fig. 732. It consists of flat plates which are connected by pins. The pins are evidently in shear, and the plates are in direct tension. Since each of the two parallel plates carries one-half the load, it should have one-half the thickness of the single plate to which it is pinned.

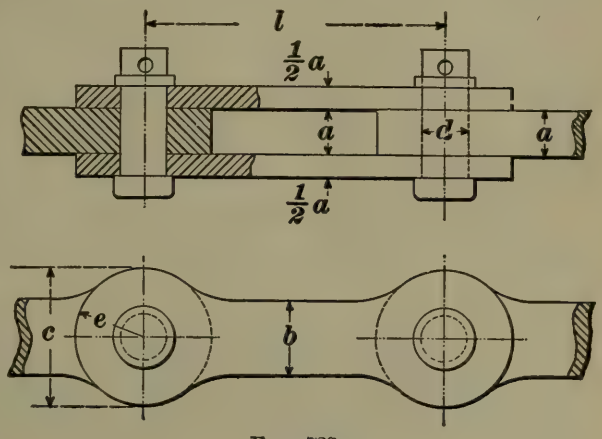

FIG. 732.

The links may be of any length desired, but the shortest convenient length is about $l = 3\,d$. The cross-section $= a\,b = \frac{P}{S_t}$, where P is the load and S_t the safe stress in tension. Taking both P and S_t in tons, we may assume $S_t = 5$ tons.

Then, $$a\,b = .2\,P.$$

The shearing section of a pin is $2 \times \frac{1}{4}\pi d^2 = \frac{1}{2}\pi d^2$. Therefore,

$$\tfrac{1}{2}\pi d^2 = \frac{P}{S_s},$$

where $S_s =$ safe shearing stress.

Assuming $S_s = 4$ tons, we have

$$d = \sqrt{\frac{P}{2\pi}}.$$

The following proportions may be used in ordinary cases:

$$b = \tfrac{4}{3}\,d. \quad c = \tfrac{5}{3}\,d. \quad e = \tfrac{11}{8}\,d.$$

When the links are short, the width b may be the same throughout. The pin connecting the plates may be riveted over or secured by a washer and split pin.

A flat-link chain may be used for transmitting powers somewhat after the fashion of a belt. The chain passes over wheels provided with teeth which engage with the links of the chain. Such a wheel is known as a **sprocket wheel.** Examples of chains used in this way are met with in agricultural machinery, bicycles, coal-mining machines, dredges, etc.

The flat-link gearing chain, Fig. 733, consists of two series of flat links which are kept some distance apart by the pins

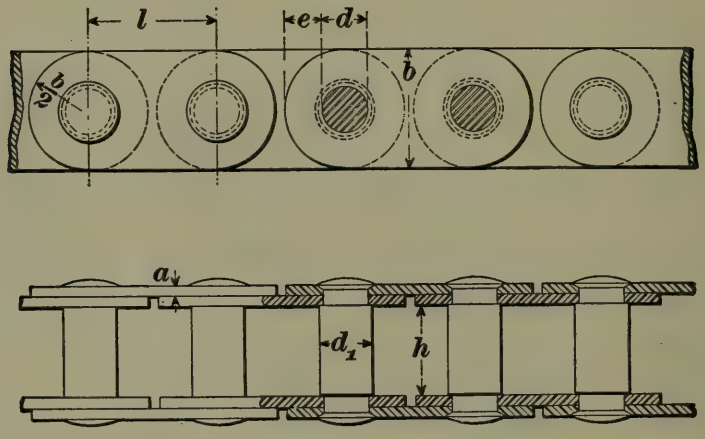

FIG. 733.

which connect them. These pins engage with the teeth of the sprocket wheel; they are enlarged between the series of plates so as to form a shoulder to prevent the plates from slipping, and also to give a greater wearing surface.

Let n = number of plates on one side of chain;
a and b = thickness and breadth of plates, respectively;
d = diameter of ends of pin;
d' = diameter of center of pin;
h = length of enlarged part of pin;
l = length of link between centers of pins;
P = total load on chain in pounds.

All dimensions in inches.

Then, the following formulas and proportions are generally used:

$$n = .13\sqrt[3]{P}; \qquad h = 1.7\,d + .5;$$

$$d = .0115\sqrt{\frac{P}{\sqrt{n}}}; \qquad l = 2.9\,d;$$

$$b = 2.5\,d; \qquad a = \frac{85\,d}{n + l};$$

$$d' = 1.2\,d; \qquad e = .85\,d.$$

EXAMPLE.—Calculate the dimensions of a plate-link gearing chain for a working load of 8,000 lb.

SOLUTION.—Number of plates on one side =

$$n = .13\sqrt[3]{P} = .13\sqrt[3]{8{,}000} = 2.6, \text{ say } 3;$$

$$d = .0115\sqrt{\frac{P}{\sqrt{n}}} = .0115\sqrt{\frac{8{,}000}{\sqrt{3}}} = .78, \text{ say } \tfrac{3}{4}'';$$

$$d' = 1.2\,d = 1.2 \times \tfrac{3}{4} = .9'', \text{ say } \tfrac{29}{32}'';$$

$$b = 2.5\,d = 2.5 \times \tfrac{3}{4} = 1\tfrac{7}{8}'';$$

$$h = 1.7\,d + .5 = 1.7 \times \tfrac{3}{4} + .5 = 1.775'';$$

$$l = 2.9\,d = 2.9 \times \tfrac{3}{4} = 2.175'';$$

$$a = \frac{.85\,d}{n + l} = \frac{.85 \times \frac{3}{4}}{3 + 2.175} = .12'', \text{ say } \tfrac{1}{8}'';$$

$$e = .85\,d = .85 \times \tfrac{3}{4} = .64''.$$

Various other forms of gearing chains are in common use. In designing machinery requiring the use of such chains it is customary to use some standard size made by a company engaged in the manufacture of chains.

It would be well for the student to send for the catalogue of some such company, and observe the proportions and sizes there adopted. Much good information may be obtained from the catalogue of The Link Belt Engineering Company, Chicago, Ill.

2071. Hooks.—Chains used on cranes and derricks must be provided with hooks for connecting to the load to be raised. The design of a crane hook must be made with care, since a break may cause loss of property and life.

A hook may be treated theoretically, as follows: The

maximum stress comes on the section $m\ n$ of the hook. See Fig. 734. Let the center of gravity of this section be a distance a from the line of action of the load, and a distance c from the inside edge of the hook.

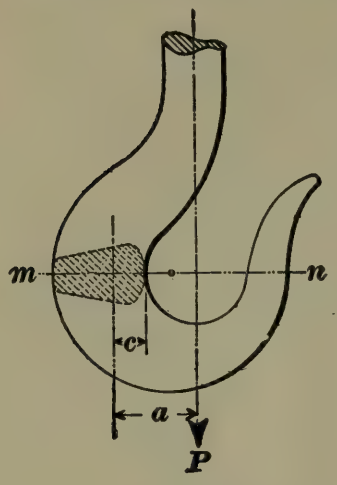

FIG. 734.

Let S_t = the stress in the section due to direct tension;
S_b = the stress due to bending;
A = area of section;
I = moment of inertia of section.

Then, for direct tension, $P = A\,S_t$, or $S_t = \frac{P}{A}$.

For bending, letting S_b = *safe* bending stress, the moment $= Pa = \frac{S_b I}{c}$ (see Art. **1398**), or $S_b = \frac{Pac}{I}$.

Now, $S_b + S_t$, equals total stress, must not exceed a safe value, say about 12,000 lb., or 6 tons per sq. in. Then, if we take P in tons,

$$S_b + S_t = 6 \text{ tons} = P\left(\frac{1}{A} + \frac{ac}{I}\right).$$

Suppose, for example, we assume the section of the hook to be a rectangle, of length b and width $\frac{2}{3}\,b$, and let the distance a, Fig. 734, equal the length b of the section; what should be the dimensions of section for a load of 3 tons?

We have

$$6 = P\left(\frac{1}{A} + \frac{ac}{I}\right) = 3\left(\frac{1}{b \times \frac{2}{3}\,b} + \frac{b \times \frac{1}{2}\,b}{\frac{1}{12}\,b^3 \times \frac{2}{3}\,b}\right),$$

$$\text{or } b^2 = \tfrac{21}{4}.$$

$$\text{Hence, } b = \sqrt{\frac{21}{4}} = 2.29, \text{ say } 2\tfrac{5}{16}'';$$

$$\text{and } \tfrac{2}{3}\,b = 1.53, \text{ say } 1\tfrac{17}{32}''.$$

The proportions shown in Fig. 735 are those used by a large crane manufacturing company. They are based on the diameter of the iron rod of which the hook is made. This diameter may be obtained by the following formula:

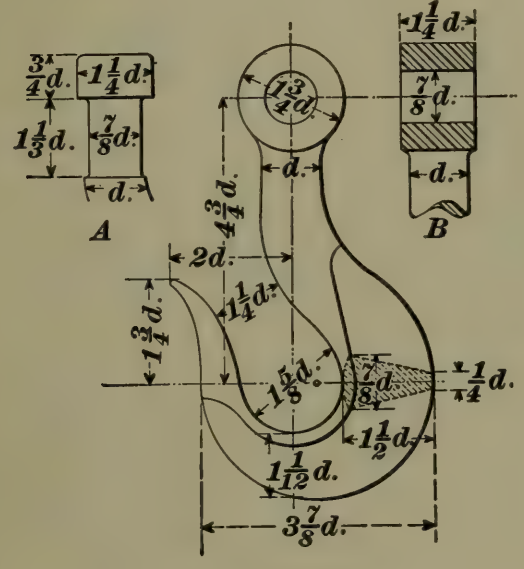

FIG. 735.

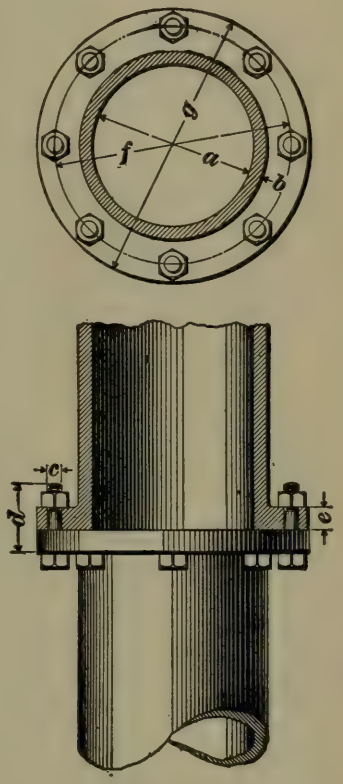

FIG. 736.

$d = \sqrt{P}$, where P is the load in tons.

The hook may have an eye, as shown in the figure, or a neck for a swivel, as shown at A.

PIPE FLANGES.

2072. The ends of cast-iron pipes, elbows, etc., are often connected by means of flanges and bolts.

Fig. 736 shows the method of flanging and bolting the ends of two cast-iron pipes. The dimensions of the flanges for the various sizes of pipes are given in the following table:

TABLE 54.

STANDARD PIPE FLANGES.

n = number of bolts.

a	*b*	*c*	*d*	*n*	*e*	*f*	*g*
2.0	.409	$\frac{5}{8}$	2.0	4	$\frac{5}{8}$	4.75	6.0
2.5	.429	$\frac{5}{8}$	2.25	4	$\frac{11}{16}$	5.25	7.0
3.0	.448	$\frac{5}{8}$	2.5	4	$\frac{3}{4}$	6.0	7.5
3.5	.466	$\frac{5}{8}$	2.5	4	$\frac{13}{16}$	6.5	8.5
4.0	.486	$\frac{3}{4}$	2.75	4	$\frac{15}{16}$	7.25	9.0
4.5	.498	$\frac{3}{4}$	3.0	8	$\frac{15}{16}$	7.75	9.25
5	.525	$\frac{3}{4}$	3.0	8	$\frac{15}{16}$	8.5	10.0
6	.563	$\frac{3}{4}$	3.0	8	1	9.625	11.0
7	.600	$\frac{3}{4}$	3.25	8	$1\frac{1}{16}$	10.75	12.5
8	.639	$\frac{3}{4}$	3.5	8	$1\frac{1}{8}$	11.75	13.5
9	.678	$\frac{3}{4}$	3.5	12	$1\frac{1}{8}$	13.0	15.0
10	.713	$\frac{7}{8}$	3.625	12	$1\frac{3}{16}$	14.25	16.0
12	.790	$\frac{7}{8}$	3.75	12	$1\frac{1}{4}$	16.5	19.0
14	.864	1	4.25	12	$1\frac{3}{8}$	18.75	21.0
15	.904	1	4.25	16	$1\frac{3}{8}$	20.0	22.25
16	.946	1	4.25	16	$1\frac{7}{16}$	21.25	23.5
18	1.020	$1\frac{1}{8}$	4.75	16	$1\frac{9}{16}$	22.75	25.0
20	1.090	$1\frac{1}{8}$	5.0	20	$1\frac{11}{16}$	25.0	27.5
22	1.180	$1\frac{1}{4}$	5.5	20	$1\frac{13}{16}$	27.25	29.5
24	1.250	$1\frac{1}{4}$	5.5	20	$1\frac{7}{8}$	29.5	32.0
26	1.300	$1\frac{1}{4}$	5.75	24	2	31.75	34.25
28	1.380	$1\frac{1}{4}$	6.0	28	$2\frac{1}{16}$	34.0	36.5
30	1.480	$1\frac{3}{8}$	6.25	28	$2\frac{1}{8}$	36.0	38.75
36	1.710	$1\frac{3}{8}$	6.5	32	$2\frac{3}{8}$	42.75	45.75
42	1.870	$1\frac{1}{2}$	7.25	36	$2\frac{5}{8}$	49.5	52.75
48	2.170	$1\frac{1}{2}$	7.75	44	$2\frac{3}{4}$	56.0	59.5

2073. The larger sizes of wrought-iron pipe, especially for high pressures, are best connected by means of flanges. Fig. 737 shows three styles of fastening these flanges to the pipe.

A is a cast-iron flange screwed to the end of the pipe by means of the standard pipe thread. It is much used, especially for sizes of pipe below 6″.

B is a wrought-iron or steel flange which is screwed to the end of the pipe, and the end of the pipe is then riveted over as shown at *a*.

C is a forged or rolled steel flange that is used for large pipes and high pressures. The pipe is fastened to the flange

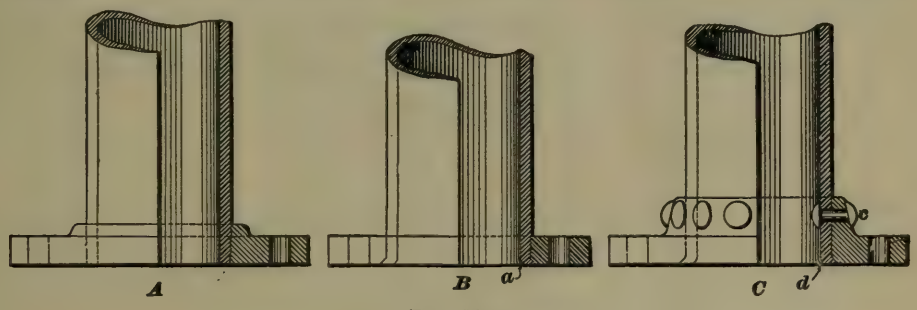

FIG. 737.

by rivets as shown at *c*, and the end is also calked or riveted over at *d* so as to form a tight joint.

The diameters of flanges and bolt circles, and number and sizes of bolts for wrought-iron pipe flanges, should be the same as given in Table 54; for, then, the flange for a pipe of a given size, whether cast or wrought iron, will fit any other pipe, valve, or fitting of the same size.

The thickness of the flanges may also be the same, although wrought-iron and steel flanges are usually made somewhat thinner.

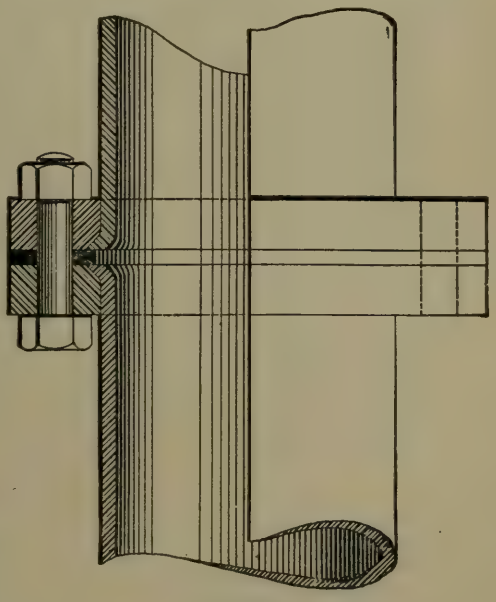

FIG. 738.

2074. Gaskets. — In order to secure a tight joint, a thin strip of some soft material is placed between the flanges as shown in Fig. 738. The material most

commonly used is either sheet rubber or paper, cut to the size of the flange.

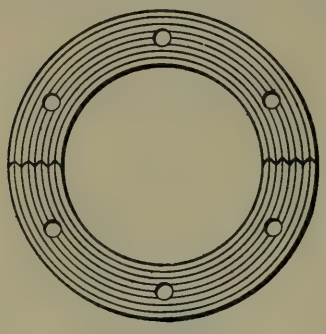

FIG. 739.

For steam pressures above 100 pounds per square inch, however, these materials are injured by the heat and often make trouble. To overcome these difficulties gaskets are sometimes made of lead or copper. Fig. 739 shows a gasket made of thin sheets of corrugated copper, as shown in the section.

A SERIES

OF

QUESTIONS AND EXAMPLES

RELATING TO THE SUBJECTS
TREATED OF IN THIS VOLUME.

It will be noticed that the questions and examples contained in the following pages are divided into sections corresponding to the sections of the text of the preceding pages, and that each section has a headline which is the same as the headline of the section to which the questions refer. No attempt should be made to answer any questions or to work any examples until the corresponding part of the text has been carefully studied.

ELEMENTARY MECHANICS.

(ARTS. 828–966.)

EXAMINATION QUESTIONS.

(355) A ball, thrown horizontally by the hand, has a velocity of 500 ft. per second. If the ground is level, and the distance from the ground to the hand at the instant the ball leaves the hand is 5 ft. 6 in., how far will the ball go before striking the ground? Ans. 292.42 ft.

(356) An engine fly-wheel, 80 in. in diameter, makes 160 revolutions per minute; what is the velocity in feet per second of a point on the rim? Ans. 55.85 ft. per sec.

(357) In the last example, through how many degrees, minutes and seconds will a point on the rim turn in one-seventh of a second? Ans. $137^\circ\ 8'\ 34\frac{2}{7}''$.

(358) The fly-wheel of an engine drives a pulley, rigidly connected to a drum on which an elevator rope winds. The fly-wheel is 4 ft. in diameter and makes 54 revolutions per minute; the diameter of the pulley is 36 in., and of the drum, 18 in.; (*a*) how long will it take the elevator to reach the top of a building 100 ft. high? (*b*) If required to reach it in 30 seconds, how many revolutions should the fly-wheel make per minute?

Ans. { (*a*) 17.68 sec.
(*b*) 31.83 R. P. M.

(359) Define and give an example of uniform motion; of variable motion.

(360) Define force. Name five different kinds of forces.

(361) Explain what you understand by inertia.

(362) Is inertia a force? If so, why?

(363) What is weight? How is it measured?

(364) In order that the effect of a force upon a body may be compared with that of another force acting on the same body, what three conditions must be fulfilled?

For notice of the copyright, see page immediately following the title page.

(365) What is motion? What is rest?

(366) Can a body be in motion with respect to one body and at rest with respect to another? Give examples.

(367) Where will a body weigh the more, on the top of a high mountain or at the bottom of a deep valley, the bottom of the valley being as far below sea-level as the top of the mountain is above?

(368) If the top of a mountain is 31,680 feet above sea-level, what would a body weighing 20,000 lb. at sea-level weigh at the top of the mountain? Take the radius of the earth at sea-level as 3,960 miles. Ans. 19,939 lb. $8\frac{1}{2}$ oz.

(369) If the body in the last example had been dropped in a hole just big enough to let it fall to the bottom, and the bottom of the hole was 2 miles below sea-level, how much would it have weighed at the bottom of the hole?

Ans. 19,989 lb. 14.4 oz.

(370) State the three laws of motion.

(371) What is acceleration?

(372) What do you understand by initial velocity?

(373) Why is it dangerous to jump from a moving train?

(374) Why is it that a man cannot lift himself by pulling his boot straps?

(375) Explain how forces are represented by lines.

(376) What is meant by the expression, "the resultant of several forces"?

(377) If a line 5 in. long represents a force of 20 lb., (*a*) how long must the line be to represent a force of 1 lb.? (*b*) Of $6\frac{1}{4}$ lb.?

(378) What do you understand by the components of a force?

(379) If a body be acted upon by two equal forces, one due east and the other due south, in what direction will the body move? What is the direction of the resultant of the two forces?

(380) Find the point of suspension of a rectangular cast iron lever 4 ft. 6 in. long, 2 in. deep and $\frac{3}{4}$ in. thick, having

weights of 47 lb. and 71 lb. hung from each end, in order that there may be equilibrium. Take the weight of a cubic inch of cast iron as .261 lb.

SUGGESTION.—First find the weight of the lever; then consider this weight to be concentrated at the center of gravity of the lever, and combine it with the other two weights in the same manner as though there were three weights.

Ans. { Short arm = 22.342 in.
Long arm = 31.658 in.

Solve the two following examples by the method of triangle of forces, and parallelogram of forces, and mark the direction of the resultant:

(381) Two forces act upon a body at a common point; one with a force of 75 lb., and the other with a force of 40 lb.; if the angle between them is 60°, and both forces act towards the body, what is the value of the resultant?

Ans. 101.12 lb.

(382) In the last example, if one force (the one of 75 lb.) acts away from the body, and the other towards it, what is the resultant? Ans. 65 lb.

(383) If two forces of 27 lb. and 46 lb., respectively, act in exactly opposite directions upon a body, what is the resultant?

(384) The entire solar system is moving through space at the rate of 18 miles per second; (*a*) what is its velocity in miles per hour? (*b*) How far will it go in one day?

(385) Two bodies, starting from the same point, move in opposite directions, one at the rate of 11 ft. per second, and the other at the rate of 15 miles per hour; (*a*) what will be the distance between them at the end of 8 minutes? (*b*) How long before they will be 825 ft. apart?

Ans. { (*a*) 3 miles.
(*b*) 25 seconds.

(386) If six forces act towards the center of gravity of a body at angles of 30°, 45°, 135°, 210°, 225°, and 300°, whose magnitudes are 75, 47, 61, 32, 53, and 98 pounds, respectively, what is the value of their resultant? Solve by method of polygon of forces. Ans. $45\frac{3}{4}$ lb.

(387) Suppose that the velocity of a steamboat in still water is 10 miles per hour, and that it is placed in a river flowing 4 miles per hour; also, that a man is walking the deck from stern to bow at the rate of 3 miles per hour. (*a*) What is the velocity of the boat when headed up stream? (*b*) When headed down stream? (*c*) Of the man in each case?

(388) A peg in the wall is pulled by two strings, one with a force of 21 lb., at an angle to the vertical of 45°, and the other with a force of 28 lb., at an angle of 60°; what is the value and direction of the resultant when the forces are on opposite sides of the vertical line? Use the method of parallelogram of forces. Ans. 30.34 lb.

(389) A force of 87 lb. acts at an angle of 23° to the horizontal; what are its horizontal and vertical components? Find, first, by the method of triangle of forces, and, second, by trigonometry. Ans. { 80.084 lb. / 33.994 lb.

(390) A weight of 325 pounds rests upon a smooth inclined plane, as shown in Fig. 119, Art. **884.** If the angle of the plane is 15°, (*a*) what is the perpendicular pressure against it? (*b*) What force would it be necessary to exert parallel to the plane, to keep it from sliding downwards, there being no friction? Solve by trigonometry, and also by the method of the triangle of forces.

Ans. { (*a*) 313.93 lb. / (*b*) 84.12 lb.

(391) If the weight of a body is 125 lb., what is its mass?

(392) If the mass of a body is 53.7, what is its weight?

(393) (*a*) Is the mass of a body always the same? (*b*) If the mass of a body on the earth's surface is 25, what would be its mass at the center of the earth? (*c*) On the surface of the moon?

(394) A body on the earth's surface weighs 141 lb.; (*a*) at what point above the surface will it weigh 100 lb.? (*b*) At what point below the surface? Take the earth's radius as 4,000 miles. Ans. { (*a*) 749.736 miles. / (*b*) 1,163.12 miles.

(395) If a body were dropped from a balloon 1 mile above the earth's surface, (*a*) how long a time would it require to fall to the earth? (*b*) What would be its velocity when it struck?

Ans. { (*a*) 18.12 seconds.
(*b*) 582.76 ft. per sec.

(396) In the last example, if the body weighed 160 lb., what would be the kinetic energy on striking the earth?

Ans. 844,799 ft.-lb.

(397) If a cannon ball were fired vertically upward with a velocity of 2,360 ft. per second, (*a*) how high would it go? (*b*) How long would it take to return to the earth?

Ans. { (*a*) 16.4 miles.
(*b*) 2 min. 26.77 sec.

(398) The earth turns round once in 24 hours. If it were a perfect sphere 8,000 miles in diameter, how far would a point on the equator travel in one minute?

(399) If a projectile weighing 400 pounds be fired from a cannon with a velocity of 1,875 ft. per second, at a target 6 ft. distant, (*a*) what will be its kinetic energy, on striking the target, in foot-pounds? (*b*) In foot-tons? (*c*) If it penetrates but 6 in., what will be its striking force?

Ans. { (*a*) 21,863,339.55 ft.-lb.
(*b*) 10,931.67 ft.-tons.
(*c*) 43,726,679 lb.

(400) If the acceleration due to gravity were 20 ft. per second, instead of 32.16 ft. per second, how much longer would it take a body to fall to the earth from a height of 200 ft. than it does now? Ans. 0.9454 second.

(401) What do you understand by center of gravity?

(402) What do you understand by specific gravity?

(403) (*a*) What is the density of a cubic foot of a body occupying a space of 800 cu. in., and weighing 500 lb.? (*b*) What is its specific gravity?

Ans. { (*a*) 33.582.
(*b*) 17.28.

(404) A body has been falling freely for 5 seconds; what is its velocity?

(405) Suppose that a body, under certain conditions, were to fall freely for 3 seconds, and then fall uniformly with the velocity it had at the end of the third second for 6 seconds longer, how far would it fall? Ans. 723.6 ft.

(406) The weight of the head and piston of a steam hammer, together with the piston rod, is 8 tons. If it falls 8 ft. and compresses a mass of iron $\frac{1}{2}$ in., what is the force of the blow? Ans. 1,536 tons.

(407) Explain what you understand by centrifugal force.

(408) If a cast iron sphere 4 in. in diameter be revolved in a circle, in which the distance from the center of the sphere to the center of the circle is 15 in., what will be the tension of the string, the sphere making 60 revolutions per minute? Ans. 13.38 lb.

(409) The outside diameter of an engine fly-wheel is 80 in.; width of face, 26 in.; average thickness of rim, 5 in.; revolutions per minute, 175; what is the centrifugal force tending to burst the rim? Ans. 38,641 lb.

(410) If a body weighs one pound at a distance of 100 miles from the center of the earth, (*a*) what will it weigh at the surface? (*b*) At 100 miles above the surface? Take the earth's radius as 4,000 miles. Ans. $\begin{cases} (a) & 40 \text{ lb.} \\ (b) & 38.072 \text{ lb.} \end{cases}$

(411) What would be the horsepower of a machine that could raise 10,746 lb. 354 ft. in 10 minutes?

Ans. 11.5275 H. P.

(412) How far above the surface of the earth will a 2-lb. ball weigh 3 oz.? Ans. 9,064 miles.

(413) What is the range of a projectile thrown horizontally, 50 ft. above a level plain, the initial velocity being 140 ft. per second? Ans. 246.87 ft.

(414) A projectile has an initial velocity of 30 ft. per second. How far below the horizontal line of direction will it strike a body 10 ft. away? Ans. 1 ft. 9.44 in.

(415) What do you understand by moment of a force? Illustrate it.

(416) Illustrate your idea of a couple.

(417) Can a couple have a single resultant force?

(418) Where is the center of gravity of a triangle located?

(419) If $A\ B\ C\ D$ is a quadrilateral, and $A\ B = 10$ in., $B\ C = 8$ in., $C\ D = 7$ in., $D\ A = 9$ in., and the angle between $A\ B$ and $B\ C$ is 90°, where is the center of gravity of the figure? Determine it graphically.

(420) Where is the center of gravity of a regular pentagon, the length of a side being seven inches?

(421) If the weight of the balls shown in Fig. 128 were $W_1 = 21$ lb., $W_2 = 15$ lb., $W_3 = 17$ lb., and $W_4 = 9$ lb., where would the center of gravity be, the distance between the centers of W_1 and W_2 being 34 in. between W_2 and W_3, 25 in.; between W_3 and W_4, 40 in., and between W_4 and W_1, 18 in.?

(422) Find the center of gravity of a square board of uniform thickness whose sides are 14 in. in length, and having one of its corners cut off at a distance of 4 in., measured from that corner each way; or, what is the same thing, cutting off a right-angled triangle whose sides, including the right angle, are 4 in. long.

(423) A bookbinder has a press, the screw of which has 4 threads to the inch. It is worked by a lever 15 in. long, to which is applied a force of 25 lb.; (*a*) what will be the pressure if the loss by friction is 5,000 lb.? (*b*) What would be the theoretical pressure? (*c*) What is the efficiency in this case?

Ans. { (*a*) 4,424.8 lb.
(*b*) 9,424.8 lb.
(*c*) 46.95%.

(424) How would you determine whether a body was stable or not if placed in a certain position?

(425) If a prism 10 inches square has been so cut that its axis is 22 inches long and makes an angle of 60° with the base, will the prism stand or fall when placed on its base? Consider the plane of the upper base as being at right angles to the axis.

(426) If the force moves through a distance of 5 ft. 6 in., while the weight is moving 6 in., (*a*) what is the velocity ratio of the machine? (*b*) What weight would a force of 5 lb. applied to the power arm raise?

(427) In the last example, if the efficiency were 65%, what weight could be raised?

(428) The length of a lever is 5 ft.; where must the fulcrum be placed, so that a weight of 35 lb. at one end may balance one of 180 lb. at the other end?

(429) In a block and tackle the theoretical force necessary to raise a weight of 1,000 lb. is 50 lb.; (*a*) what is the velocity ratio? (*b*) How many pulleys are there? (*c*) If the actual force necessary to raise the load is 95 lb., what is the efficiency? Ans. (*c*) 52.63%.

(430) The nuts on a cylinder head are tightened by a wrench whose handle is 20 in. long. If the force exerted upon the wrench is 60 lb., and the efficiency of the combination is 40%, what pressure will the nut exert against the head (or, in other words, what is the tension of the stud), the pitch of the screw being $\frac{1}{8}$ of an inch? Ans. 24,127.5 lb.

(431) The base of an inclined plane is 20 ft. in length and its height is 5 ft.; (*a*) what force acting parallel to the plane will balance a weight of 1,580 lb.? (*b*) What force acting parallel to the base would balance this weight?

Ans. { (*a*) 383.2 lb. (*b*) 395 lb.

(432) Find what the weights W and W' must be to produce equilibrium when the levers shown in Fig. 1 are suspended from the ring A.

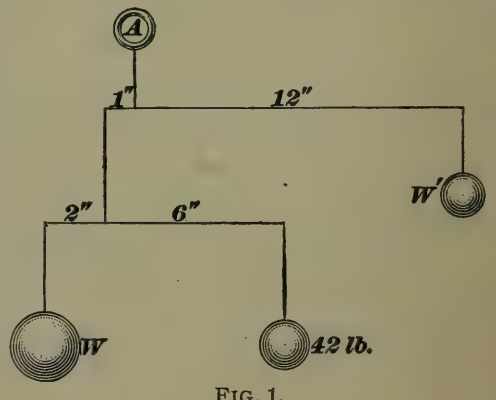

FIG. 1.

(433) If in Fig. 141, the power arms P F equal 14, 21 and 19 inches, respectively, and the weight arms

W F equal $2\frac{1}{2}$, $3\frac{1}{4}$ and $2\frac{7}{8}$ inches, respectively, what force applied at P will raise a load of 725 lb.? Ans. 3.032 lb.

(434) In Fig. 144, suppose the radius of the wheel A is 15 in.; of C, 12 in., of E, 20 in.; of the drum F, 5 in.; of the pinion D, $3\frac{1}{2}$ in., and of B, 3 in.; (*a*) what load would a force of 35 lb. applied at P raise? (*b*) What is the velocity ratio? (*c*) If the weight actually raised was 1,932 lb., what is the efficiency? Ans. Efficiency = 80.5%.

(435) A frame having the shape of an equilateral triangle measuring 15 in. on each edge is suspended in a horizontal position, weights of 12, 15, and 18 lb., respectively, being hung from each corner. Where is the point of suspension that the frame may remain horizontal? Solve graphically, and measure the perpendicular distances from the point of suspension to each edge of the triangle.

(436) A stone weighing 500 lb. is balanced on the edge of the roof of a building 75 ft. high; (*a*) what is its potential energy? (*b*) If all of its potential energy could be changed into kinetic energy, without any loss through friction or heat, how many horsepower would be developed, on the supposition that the work was done in the same time that it would take the stone to fall freely to the ground? Ans. (*b*) 31.57 H.P.

(437) A cubic foot of a certain kind of stone weighs 127 lb.; what is its specific gravity? Ans. 2.032.

(438) The specific gravity of bismuth is 9.823; what is the weight of a cubic inch? Ans. .3553 lb.

(439) In the differential pulley shown in Fig. 149, the radius of the larger pulley is $6\frac{1}{2}$ in., and of the smaller pulley, $5\frac{3}{4}$ in.; what weight will a force P of 60 lb. raise if the efficiency of the mechanism is 48%? Ans. 499.2 lb.

(440) If a hammer whose head weighs $1\frac{1}{2}$ lb., strikes a nail with a velocity of 25 ft. per second, driving it $\frac{3}{8}$ of an inch into the wood, what is the force of the blow?

Ans. 466.42 lb.

(441) If 4 cu. ft. of copper alloy weigh a ton (2,000 lb.), (*a*) what is its specific gravity? (*b*) What is the weight of a cu. in.? Ans. (*a*) Sp. Gr. 8.

(442) If the distance between the center line of the handle and the axis of the drum shown in Fig. 143 is $14\frac{1}{2}$ in., and the diameter of the drum is 5 in., what load will a force of 30 lb. exerted on the handle at P raise?

(443) If the coefficient of friction is .21, what force would be required to move a body weighing 75 lb.?

(444) If a man raises a weight of 900 lb. 150 feet in 15 minutes, by means of a fixed and movable pulley, (*a*) how much work has he done? (*b*) What part of a horsepower is this equivalent to? Ans. (*b*) $\frac{3}{11}$ H.P.

(445) In the last example, what horsepower would the man have actually expended if the resistance due to friction had been 36% of the load? Ans. .3709 H.P.

(446) If a force of 18 lb. is just sufficient to move a weight of 88 lb. along a horizontal plane, what is the coefficient of friction? Ans. .2045.

(447) If 3 cu. ft. of a certain material weigh 1,200 lb., what is its density? Ans. 12.438.

(448) An iron plate rests upon four supports; upon it is placed a weight of 125 lb.; a compressed spring, placed under the plate directly under the center of gravity of the plate and weight, exerts an upward pressure of $47\frac{1}{2}$ lb. What is the pressure upon each support? Neglect weight of plate.

(449) Find the resultant of the forces acting in Fig. 2—all acting towards the same point.

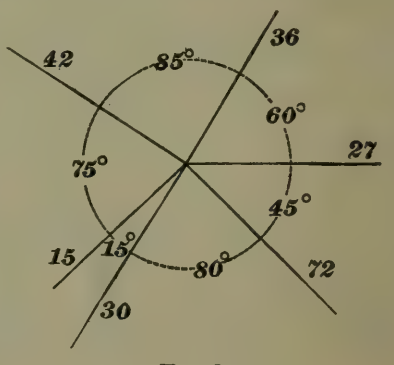

FIG. 2.

(450) The distance between the center line of the handle and the axis of the drum in Fig. 143 is 12 in., and the diameter of the drum is $4\frac{1}{2}$ in. The free end of the rope, forming part of a block and tackle having 6 pulleys, is wound up on this drum. How great a weight can be lifted by the pulleys if a force of 30 lb. is exerted on the handle? Ans. 960 lb.

(451) (*a*) What is the velocity ratio in the last example? (*b*) If the weight actually lifted by a force of 30 lb. was 790 lb., what is the efficiency?

Ans. { (*a*) 32. (*b*) 82.29%.

(452) It is desired to raise a weight by means of a pulley fixed overhead, the free end of the rope passing over another pulley, fixed to the floor. If the resistance due to friction is 24% of the load lifted, (*a*) what force would be necessary to raise a weight of 475 lb.? (*b*) What is the efficiency?

Ans. { (*a*) 589 lb. (*b*) 80.64%.

(453) Explain your idea of work, power, horsepower, and kinetic energy. If a constant force of 6 pounds can cause a body weighing 60 pounds to move a distance of 25 feet in $2\frac{1}{2}$ seconds, what is (*a*) the work done? (*b*) The power expended?

STRENGTH OF MATERIALS.

(ARTS. 1331–1421.)

EXAMINATION QUESTIONS.

(689) (*a*) What are the advantages and disadvantages of cast iron as a material for construction purposes? (*b*) Of steel? (*c*) Of wrought iron? (*d*) For what purposes are each of the above largely used?

(690) Define the following: (*a*) Stress; (*b*) strain; (*c*) elasticity; (*d*) coefficient of elasticity; (*e*) ultimate strength.

(691) In how many ways may stress be applied to a body? Give an example of each.

(692) How much will a wrought-iron rod 2″ in diameter and 10 feet long be elongated by a pull of 40 tons?

Ans. .12223 in.

(693) A steel rod $7\frac{1}{2}$″ long and $\frac{1}{2}$″ in diameter is elongated .009″ by a pull of 7,000 pounds; what is the coefficient of elasticity? Ans. 29,708,853 lb. per sq. in.

(694) What force is required to produce an elongation of .006″ in a cast-iron bar $1\frac{1}{2}'' \times 2''$ and 9 feet long?

Ans. 2,500 lb.

(695) A wooden rod 3″ in diameter is elongated .05″ by a force of 2,000 pounds; what was its original length?

Ans. 265.07 in.

(696) What is the minimum diameter of a wrought-iron bolt which is to withstand a steady pull of 6 tons with safety? Ans. 1.054 in.

(697) How long must a cast-iron bar be, if supported vertically at its upper end, to break under its own weight?

Ans. 6,400 feet.

For notice of the copyright, see page immediately following the title page.

(698) The diameter of a wrought-iron bolt is $\frac{3}{4}''$; what should be the thickness of the bolt head in order that the bolt may be equally strong in tension and in shear; in other words, what should be the thickness of the head in order that the force required to pull the bolt apart shall be just equal to the force required to strip the head from the bolt?

Ans. .206 in.

(699) What safe load may be borne by a brick pier, the cross-section of which is $2\frac{1}{2} \times 3\frac{1}{2}$ feet? Ans. 105 tons.

(700) In Fig. 11, the force P is $1\frac{3}{4}$ tons and acts at an angle of 30° with the horizontal. The width b of the timber tie-rod is 4 inches. Find the safe length a necessary to prevent shearing on the surface $a\ b$.

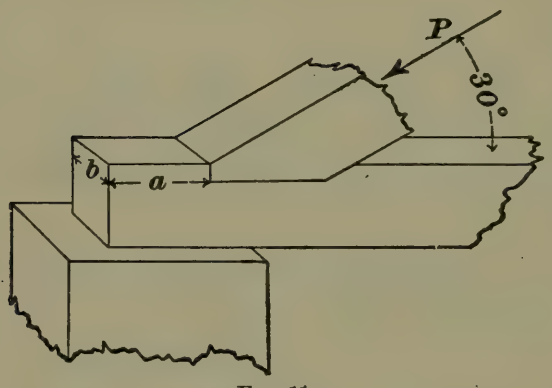

FIG. 11.

Ans. 10.1 in.

(701) Show that a cylindrical boiler is twice as liable to rupture along a longitudinal seam as along a transverse seam.

(702) Assuming that the strength of the boiler plate is reduced 40% owing to the area lost by the rivet holes, what should be the thickness of the plate of a wrought-iron boiler 4 feet in diameter which sustains a steam pressure of 120 lb. per sq. in.? Assume factor of safety for steady stress.

Ans. .35 in.

(703) What should be the thickness of a 6″ cast-iron water pipe to carry a steady pressure of 200 lb. per sq. in.?

Ans. .18 in.

(704) What should be the thickness of a wrought-iron boiler tube 3″ in diameter, 12 ft. long, and exposed to an external steam pressure of 130 lb. per sq. in.? Use a factor of safety of 10. Ans. .272 in.

(705) A cast-iron cannon of 4″ bore is subjected to an internal pressure of 2,000 lb. per sq. in. on being fired; what should be the thickness of the metal in order that it shall not be subjected to a stress of more than 2,800 lb. per sq. in.?

Ans. 5 in.

(706) A structure of the nature of a simple beam is 100 feet long between the supports, and carries three equal loads of 1,200 lb. each, at distances from the left support of 40, 60, and 80 ft. (*a*) Find the maximum bending moment; (*b*) the shear at a distance of 30 ft. from the left support; (*c*) the maximum shear.

Ans. { (*a*) 748,800 in.-lb.
(*b*) 1,440 lb.
(*c*) − 2,160 lb.

(707) Find graphically the magnitude, direction, and position of the resultant of the forces shown in Fig. 12.

NOTE.—In Figs. 12 and 14, the line *m n* is drawn simply to locate the forces. Thus, in Fig. 12, F_1 makes an angle of $47\frac{1}{2}°$ with *m n*; F_2

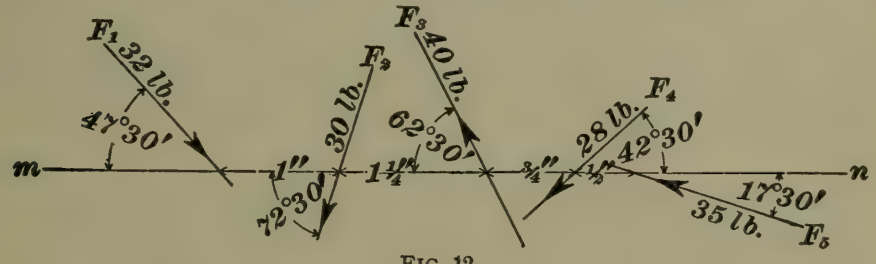

FIG. 12.

makes an angle of $72\frac{1}{2}°$ with *m n*, and so on. The distance between the intersection of F_1 and F_2 with *m n* is 1 inch; the distance between the intersections of F_3 and F_2 is $1\frac{1}{4}$ inches, etc.

(708) A beam is loaded as in Fig. 13. Find the reaction of the supports, and draw the shear diagram.

(709) (*a*) Where is the maximum bending moment of the above beam? (*b*) What is it in inch-tons? (*c*) In inch-pounds?

Ans. { (*b*) 288 in.-tons.
(*c*) 576,000 in.-lb.

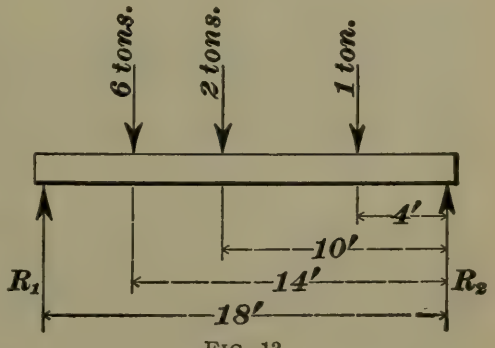

FIG. 13.

(710) Define the following: Simple beam: cantilever; restrained beam; continuous beam.

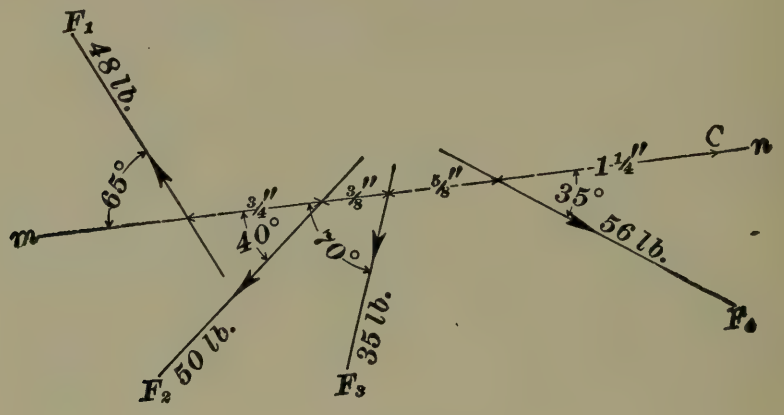

FIG. 14.

(711) Find the resultant moment of the forces of Fig. 14 about the point *C*.

(712) A rectangular white-pine beam 22 feet long carries a load of 4 tons, 8 feet from one end. Assuming the depth of the beam to be double the width, what should be its dimensions to safely support the load?

Ans. Depth = $17\frac{1}{3}$ in.; breadth = $8\frac{2}{3}$ in.

(713) The beam of Fig. 15 is loaded as shown and has, in addition, a uniform load of 40 pounds per foot. (*a*) Find the maximum shear; (*b*) the maximum bending moment; (*c*) the reactions of the supports.

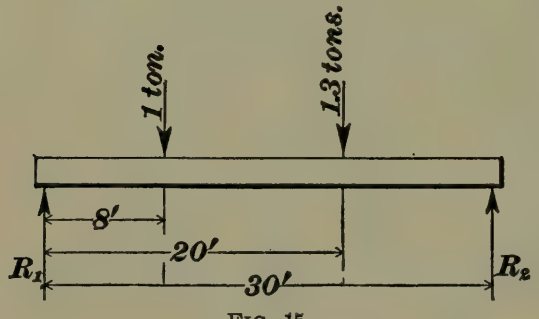

FIG. 15.

Ans. { (*a*) 2,930 lb.
(*b*) 320,000 in.-lb.
(*c*) 2,930 and 2,870 lb.

(714) The moment of inertia of a wrought-iron I beam 12″ deep is 280; what uniform load will it sustain? The stress is assumed to be steady. The beam is 20 ft. long and rests upon two supports. Ans. 875 lb. per ft.

(715) A hollow circular cast-iron beam 8 feet long rests upon two supports. The inside diameter is 5 in. and the outside diameter $6\frac{1}{2}$ in.; what is the maximum safe load that may be concentrated at its center? Ans. 4,624 lb.

(716) A hemlock floor beam is $2'' \times 10''$ and 16 feet long; (*a*) what distributed load will it carry? (*b*) What distributed load would it carry if laid with the $10''$ side horizontal?

Ans. { (*a*) 78.12 lb. per ft.
(*b*) 15.6 " "

(717) Find the deflections of the beams of (*a*) example 714, (*b*) example 715, and (*c*) example 716 (*a*).

Ans. { (*a*) .45 in.
(*b*) .1 in., nearly.
(*c*) .461 in.

(718) The piston of a steam engine is 14 in. in diameter; the steam pressure is 80 lb. per sq. in. Assuming that the total pressure on the piston comes on the crank-pin at the dead points, and considering the crank-pin as a cantilever uniformly loaded, what should be its diameter if 4 inches long and made of wrought iron? Take a factor of safety of 10. Ans. 3.82 in.

(719) What load can be safely sustained by a cast-iron column 14 feet long and $6''$ in diameter, with flat ends?

Ans. 120,872 lb.

(720) What should be the dimensions of a piece of timber 30 ft. long, with flat ends, to support a load of 7 tons, the cross-section being in the form of a square?

Ans. $9\frac{5}{8}$ in. square.

(721) A cylindrical steel connecting-rod $7\frac{1}{2}$ ft. long is subjected to a maximum stress of 21,000 pounds. Assuming it to be a column with both ends hinged, and subjected to shocks, determine its diameter to the nearest $\frac{1}{8}''$. Ans. $2\frac{5}{8}$ in.

(722) A wrought-iron piston rod has a diameter of $2''$ and a length of 4 feet. Assuming it to be a column with one end flat and the other rounded, what is the allowable diameter of the piston if the steam pressure is 60 pounds per sq. in.? The rod is subjected to shocks. Ans. $1\frac{7}{8}$ in.

(723) A beam is $6'' \times 8''$ and 10 feet long, the $8''$ side being vertical. Another beam of the same material is $4'' \times 12''$ and 16 feet long, the $12''$ side being vertical. (*a*) What is the ratio between the maximum loads the two beams are capable of supporting? (*b*) What is the ratio between the deflections in the two cases, the manner of loading being the same?

Ans. { (*a*) $1\frac{1}{15}$: 1.
(*b*) .549 : 1.

(724) (*a*) What should be the diameter of a round wrought-iron shaft to transmit 40 H. P. at 120 R. P. M.? (*b*) To transmit 80 H. P. at 100 R. P. M.?

Ans. { (*a*) 3.739 in.
(*b*) 4.65 in.

(725) What must be the diameter of a steel engine shaft to transmit 4,000 H. P. at 50 R. P. M.? Ans. 14.22 in.

(726) What H. P. can be transmitted by a steel shaft $4''$ square, making 80 R. P. M.? Ans. 71.775 H. P.

(727) What horsepower can be transmitted by a hollow wrought-iron shaft making 100 R. P. M., the outside diameter being $7\frac{1}{2}$ in., and the inside diameter 5 in.?

Ans. 717.7 H. P.

(728) (*a*) What weight may be safely sustained by a hemp rope $8''$ in circumference? (*b*) What should be the diameter of an iron wire rope of 7 strands to safely sustain a stress of 6,000 pounds? (*c*) What should be the circumference of a steel hoisting rope which is required to lift a load of $6\frac{2}{3}$ tons?

Ans. { (*a*) 6,400 lb.
(*b*) 1.054 in.
(*c*) 3.65 in.

(729) (*a*) An open link chain is made of $\frac{1}{8}''$ iron; what safe load will it sustain? (*b*) What should be the diameter of the iron composing the links of a stud-link chain which is to sustain a load of 4 tons?

Ans. { (*a*) 9,187.5 lb.
(*b*) .667 in.

(730) A steel shaft $2''$ in diameter is supported by hangers 10 feet apart; if a pulley be placed midway between the hangers, what should be the maximum allowable belt pull on

the pulley in order that the shaft shall not deflect more than $\frac{1}{8}''$? Ans. 327.25 lb.

SUGGESTION.—Assume the shaft to be a restrained beam, loaded in the middle.

(731) An engine shaft rests on bearings 5 feet apart; midway between the bearings the shaft carries a fly-wheel weighing 3 tons. (*a*) Find the size of the shaft to withstand this load. (*b*) Find the size of the shaft on the assumption that the engine makes 80 R. P. M. and develops 75 H. P. The shaft is made of steel. Factor of safety, 10.

Ans. { (*a*) $4\frac{1}{4}$ in., nearly.
(*b*) $4\frac{5}{8}$ in., nearly.

(732) A white oak cantilever is loaded as shown in Fig. 16, and has in addition a uniform load of 80 pounds per foot. (*a*) Determine graphically the shear diagram and the maximum bending moment. (*b*) Find the necessary dimensions of the cross-section of the beam, assuming the depth to be $2\frac{1}{2}$ times the breadth, and the stress to be steady.

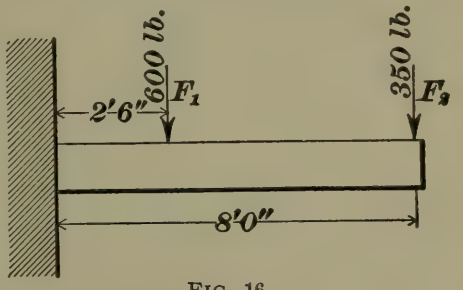

FIG. 16.

Ans. { (*a*) 82,320 in.-lb.
(*b*) $b = 3.7$ in.; $d = 9\frac{1}{4}$ in.

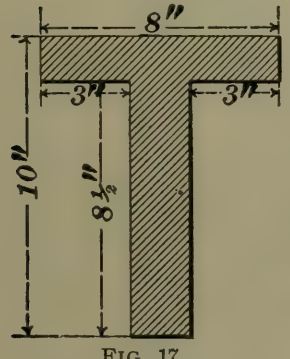

FIG. 17.

(733) A steel beam of the cross-section shown in Fig. 17 rests upon two supports 35 feet apart; (*a*) what concentrated load will it sustain at the center, the stress being considered as varying? (*b*) What total uniform load will it sustain, the stress being steady?

Ans. { (*a*) 7,246 lb.
(*b*) 20,290 lb.

(734) (*a*) The moment of inertia of a rectangle is 72; the area of the rectangle is 24 sq. in.; what is the value of r in formula **115**? (*b*) What are the dimensions of the rectangle? (*c*) The moment of inertia of a circle about an axis

through its center is $\frac{\pi d^4}{64}$; the area of the circle is $\frac{\pi d^2}{4}$; what is the radius of gyration of the circle?

Ans. $\begin{cases} (a)\ 1.732. \\ (b)\ b = 4 \text{ in.}; \ d = 6 \text{ in.} \\ (c)\ \frac{1}{4}d. \end{cases}$

(735) A cast-iron sphere 8″ in diameter is subjected to a steady internal pressure of 100 lb. per sq. in.; what should be its minimum thickness to safely withstand this pressure?

Ans. .06 in.

(736) A beam 28 feet long, uniformly loaded with 60 pounds per foot, rests upon two supports which are placed 5 feet from each end. Determine graphically the maximum shear and the maximum bending moment.

Ans. Bending moment = 20,160 in.-lb.

(737) Assuming the above beam to be made of white pine, find the dimensions of its cross-section, the stress being steady. The beam is to be rectangular.

(738) A wrought-iron boiler tube $2\frac{1}{2}$″ in diameter and 9 feet long has a thickness of .2″; what external pressure can the tube withstand, using a factor of safety of 10?

Ans. 106.43 lb. per sq. in.

(739) A crane chain is required to lift 5 tons; what should be the diameter of the iron composing the links of the chain, which is of the open link variety? Ans. .913 in.

(740) A gear-wheel 4 feet in diameter is keyed to a shaft. The force acting tangent to the pitch circle of the gear-wheel is 350 pounds; what should be the diameter of the shaft if made of steel? Ans. 2.84 in., say $2\frac{7}{8}$ in.

(741) The head of an engine cylinder, 12″ in diameter, is fastened on by 10 wrought-iron bolts. In order to make the joint steam tight, a safe stress of only 2,000 pounds per sq. in. is allowed. The steam pressure being 90 pounds per sq. in., what should be the minimum diameter of the bolts, that is, the diameter at the root of the thread? Ans. .8 in.

(742) A beam 18 feet long has a load of 1 ton placed at each end. The supports are placed 5 feet from each end. (See Fig. 18.) (*a*) Draw the shear diagram and find the maximum bending moment. (*b*) If made of cast iron and circular in cross-section, what should be its diameter, the stress being steady?

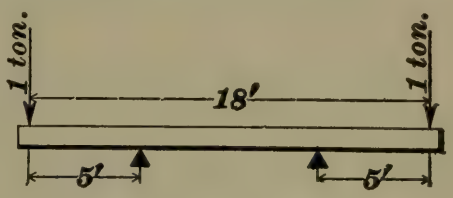

FIG. 18.

Ans. { (*a*) 120,000 in.-lb.
(*b*) 5.784 in.

(743) A beam $2'' \times 6''$ in cross-section and 18 feet long deflects .3″; how much will a beam $3'' \times 8''$ and 12 feet long deflect under the same load? The long side is placed vertically in both cases. Ans. .025 in.

(744) A wrought-iron key, or cotter, is used to fasten a rod, as shown in Fig. 19. There is a pull of 20,000 pounds on the rod. Assuming the breadth of the key to be four times the thickness, find its dimensions to safely resist the stress. Use a factor of safety of 10.

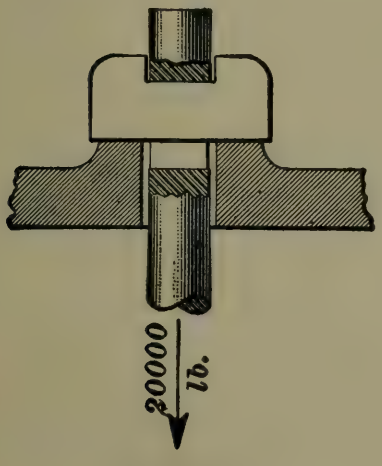

FIG. 19.

Ans. { Breadth, 2.828″.
Thickness, .707″.

(745) A steel engine shaft 12″ in diameter, resting in bearings 54″ apart, carries a fly-wheel weighing 30 tons, midway between the bearings; what is the deflection of the shaft? Consider the shaft as a simple beam. Ans. .0064 in.

(746) (*a*) A 7-strand steel wire rope has a diameter of $1\frac{1}{4}''$; what load will it carry safely? (*b*) Find the circumference of a hemp rope to carry $1\frac{3}{4}$ tons.

Ans. { (*a*) 14,062.5 lb.
(*b*) 5.92 in.

(747) What stress would be required to rupture a cast-iron cylinder which is 8″ in diameter and 6″ thick?

Ans. 12,000 lb.

(748) A beam which is 100 feet long carries four equal loads of 1,200 pounds each at distances of 20, 40, 60, and 80 feet from the left support. (*a*) Find the maximum bending moment, and (*b*) the shear at each support.

Ans. { (*a*) 864,000 in.-lb.
(*b*) 2.400 lb.

APPLIED MECHANICS.

(ARTS. 1422–1588.)

EXAMINATION QUESTIONS.

(749) A lever is required to transfer motion from one line to another one parallel to it, and $4\frac{1}{2}''$ distant. The motion along one line is to be $3\frac{3}{4}''$, and along the other line $2\frac{3}{4}''$. Determine the length of the lever arms graphically, assuming the fulcrum to be between the ends of the lever.

(750) A motion of 6 inches along one line is to be transferred and increased to a motion of 8 inches along another line, making an angle of 45° with the first line. The direction of the motion is to be reversed. Make a drawing of a bell-crank lever, one-fourth size, which will accomplish this.

(751) Design a bell-crank lever like that shown in Fig. 347. Given, angle between center lines of motion, 10°; ratio of motions, 4 : 3; length of long arm, 16 inches. Draw one-fourth size.

(752) Design a lever indicator reducing motion which will give an exact reduction. Stroke of engine, 3 feet; length of card, $3\frac{1}{2}$ inches.

(753) A vibrating toothed pinion 12″ in diameter gears with a rack which has a corresponding reciprocating motion. How far must the rack move to cause the wheel to vibrate through an angle of $6\frac{1}{2}°$? Ans. .68 inch.

(754) Draw a skeleton diagram of the mechanism shown in Fig. 20; i. e., a diagram showing the positions of the center line of each link when in mid-position and in each extreme position. Crank *A* is the driver; the bell-crank *B* has equal arms of any convenient length; the long arm of the lever *C* makes an angle of 30° with the vertical when in

For notice of copyright, see page immediately following the title page.

mid-position, and on its upper end carries a segment, gearing with the pinion *D*. The pinion is to vibrate exactly

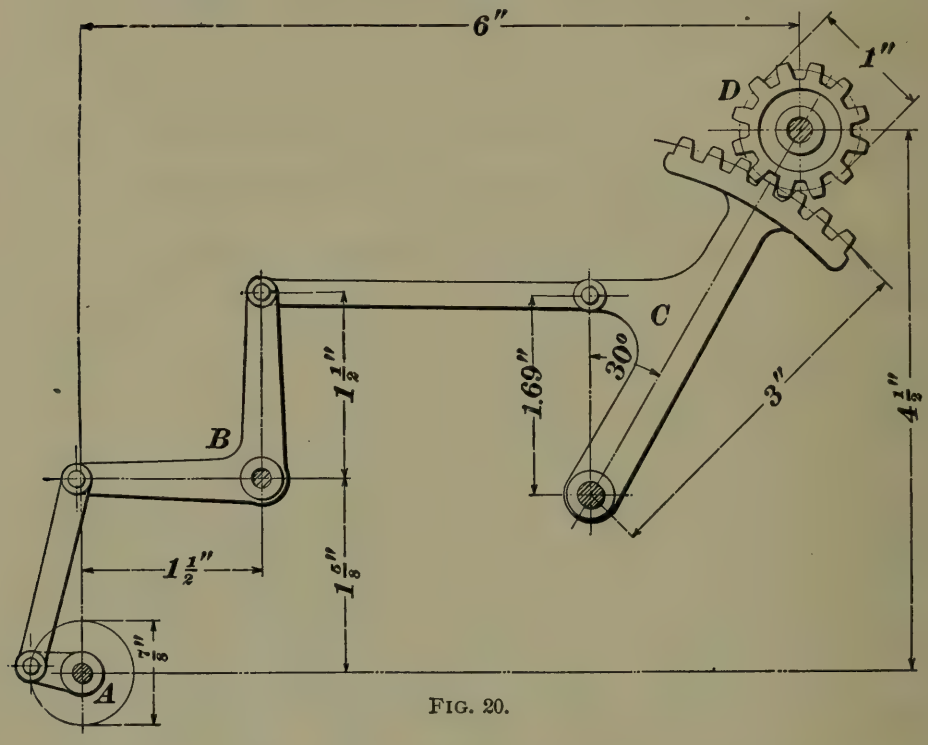

FIG. 20.

one-half a turn for each stroke of the lever *C*. All necessary dimensions are given in the figure.

(755) In the connecting-rod mechanism of Fig. 349, (*a*) does the cross-head move more rapidly during the first or during the second half of the return stroke? (*b*) What effect does increasing the length of the connecting-rod have upon this motion?

(756) Two cranks of the same length are keyed to the same shaft so as to be parallel, and revolve together, side by side; one crank drives a cross-head *A* by means of a connecting-rod, and the other crank drives a slotted cross-head *B*. If the crank turns *left-handed* and cross-head *A* is at the *left* of the crank-shaft, (*a*) which cross-head leads during the forward stroke? (*b*) Which, during the return stroke?

(757) In Fig. 21 is a bookbinder's press, consisting of two equal armed toggle-joints, drawn together by a right and

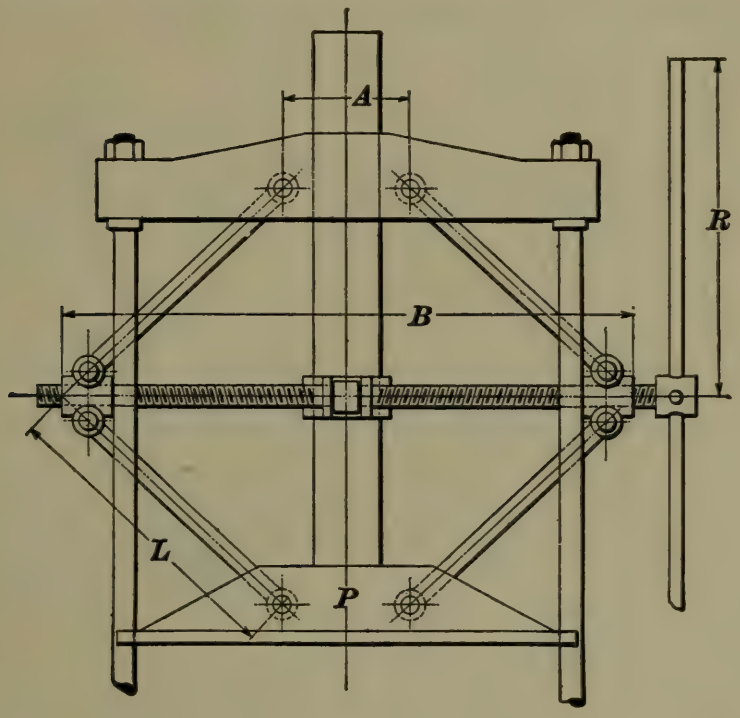

FIG. 21.

left hand screw. If $R = 10''$, $L = 18''$, $A = 12''$, and the screw has four threads per inch, what pressure would the platen P exert when a force of 75 lb. is exerted at the end of the handle, and the distance B is 16 inches? Neglect friction. Ans. 84,295.4 lb.

(758) Fig. 22 illustrates a mechanism in a certain machine. A pulley P drives shaft O, to which is attached crank disk D, the radius of the crank being $O\ R$. $C\ E$ is a vibrating lever with a pin E, at the end of which the connecting-rods $R\ E$ and $K\ E$ are attached, thus transmitting the motion to the cross-head H. With a belt pull of 2 lb., it is desired to find (a) the force exerted upon the pin K, and (b) the horizontal thrust exerted by the cross-head H, when $C\ E$ makes an angle of 30° with the horizontal.

As the example is to illustrate the principle only, the dimensions are, for convenience, made small.

Given, diameter of pulley, 3″; radius $O\,R = \frac{1}{2}''$; radius $C\,E = 1\frac{3}{4}''$; $K\,E = 5\frac{1}{2}''$. The length of $R\,E$ is such that the crank disk will cause point E to move exactly to E'.

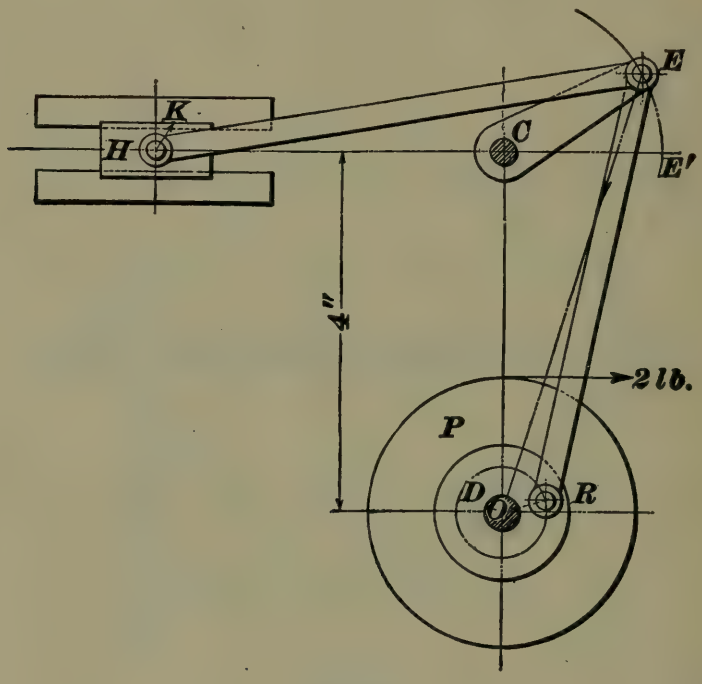

FIG. 22.

NOTE.—Draw $O\,E$ and consider $E\,O\,R$ as a crank and connecting-rod mechanism, with the cross-head at E, and moving in the direction of the arrow.

Ans. { (*a*) 14.08 lb. (*b*) 13.86 lb.

(759) What adjustments to the stroke are necessary in a shaping or slotting machine where the tool has a reciprocating motion?

(760) (*a*) Show graphically how to construct a vibrating link motion, so that the periods of advance and return are to each other as 3 is to 2. Length of stroke, 24″; scale, 3″ = 1 ft. (*b*) What would be the effect of shortening the stroke of the tool slide?

(761) (*a*) Show how to construct a Whitworth quick-return motion, so that the period of return equals one-half of the period of advance. (*b*) Plot the motion for positions of the driving gear at every 20° of its motion. (*c*) What do

you consider to be the relative merits of the vibrating link and Whitworth quick-return motions?

(762) (*a*) A universal joint is used to couple two shafts at an angle of 28° with each other. If the driving shaft revolves 50 times per minute, what would be the greatest and least rates of motion of the driven shaft? (*b*) What would be the effect of using two universal joints, if the forks on the middle shaft which connects them *were at right angles with each other?*

Ans. (*a*) Greatest = 56.63 rev. Least = 44.15 rev.

(763) Given the stroke of a Watts straight-line motion = 2 ft.; distance from the center of the lower lever to the center line of motion of the guided point = 30″; perpendicular distance between the two levers when in mid-position = 3 ft.; perpendicular distance of the guided point from the lower end of the connecting link = 15″. Required the lengths of the two levers.

Ans. { Length of upper lever, 23.1″.
Length of lower lever, 31.2″.

(764) Find the outline of a cam to turn uniformly right handed and give motion to a point moving on a line passing through the axis of the cam. The point is to remain stationary during the first $\frac{1}{12}$ revolution of the cam; to move uniformly away from the center of the cam 2″ for the next $\frac{8}{12}$ revolution, and then to move to its first position with a harmonic motion during the remaining $\frac{3}{12}$ revolution. Take $1\frac{1}{2}$″ as the shortest distance between the point and the axis of the cam.

(765) Draw the outline for a cam to turn uniformly left-handed, and give a motion to a roller 1″ in diameter in a horizontal line, passing 1″ above the axis of the cam. The roller is to have a uniform motion of $2\frac{1}{2}$″ to the left during the first $\frac{1}{2}$ revolution of the cam; during the next $\frac{1}{4}$ revolution it is to remain at rest, and then is to move suddenly to its first position, where it is to remain during the last quarter-turn of the cam. The nearest position of the center of roller to the axis of the cam is to be 2″.

(766) A cylindrical cam 3″ in diameter is designed to move a roller uniformly to the left a distance of 1″ during the first half revolution; to move it uniformly to the right $\frac{1}{2}$″ during the next $\frac{1}{8}$ revolution, at which point it remains during the next quarter revolution. During the last $\frac{1}{8}$ of a revolution, it returns uniformly to its first position. The cam turns left-handed as looked at from the right. Draw the development of the groove, the diameter of the roller being $\frac{1}{2}$″.

(767) Lay out the outline for a positive-motion plate cam, like that in Fig. 369. Diameter of rollers, $\frac{3}{4}$″; distance between centers of rollers, 5″; required movement of rod, $1\frac{1}{4}$″.

(768) A pulley 4 ft. in diameter drives another pulley 52″ in diameter by means of a belt. If the speed of the driven shaft is 320 revolutions per minute, what is the speed of the driving shaft? Ans. $346\frac{2}{3}$ rev. per min.

(769) The driving pulley on a machine is 10″ in diameter, and should run at 500 revolutions per minute. What should be the diameter of the pulley on the countershaft, the speed of which is 210 revolutions per minute? Ans. $23\frac{4}{5}$″.

(770) A saw arbor is fitted with a pulley $3\frac{1}{2}$ inches in diameter. The countershaft has pulleys 20″ and 6″ in diameter. What size pulley should be placed on the main shaft, which runs at 189 revolutions per minute, to drive the saw at 1,800 revolutions per minute? Ans. 10 inches.

(771) A machine is to be belted through a countershaft so as to run at 900 revolutions per minute, the speed of the main driving shaft being 150 revolutions per minute. Find two ratios that could be used for each pair of pulleys.

(772) A shaft making 200 revolutions per minute has upon it a pulley 36″ in diameter, carrying a belt upon its periphery which transmits 5 horsepower. (*a*) What is the effective pull on the belt? (*b*) What diameter should the pulley have in order that the effective pull may be 50 lb.?

Ans. { (*a*) 87.54 lb.
(*b*) 63 inches +.

(773) Determine by the aid of Table 33 what you would consider to be a suitable width of single belt for driving a saw arbor under the following conditions: Greatest horsepower required, 6; diameter of smaller pulley, 4″; diameter of driving pulley, 30″; distance between the centers of the two pulleys, 5 ft.; number of revolutions of the saw arbor, 1,500.

(774) A 250-horsepower Corliss engine makes 90 revolutions per minute, and has a 14-ft. band wheel. How wide should the rim of the wheel be, the rim being 1″ wider than the belt. Calculate for a double belt. Ans. 41 inches.

(775) Two shafts connected by a 6-inch single belt running over 24-inch pulleys make 205 revolutions per minute. How much power should the belt transmit?

Ans. 8.6 H. P., nearly.

(776) If the belt were found to be inadequate for the work in the last example, which would be the more effectual remedy—to use a 6-inch double belt in place of the single belt, or to substitute 30″ pulleys for the 24″ pulleys, and still use a 6-inch single belt?

(777) Two continuous cones are required to give a range of speed between 70 and 400 revolutions per minute. Assuming the large diameters of the cones to be 18″, (*a*) what must be the small diameters? (*b*) What should be the speed of the driving shaft? Both cones are to be alike.

Ans. { (*a*) 7.53 in. (*b*) 167⅓ rev.

(778) In the above example, if the speed of the driving shaft were 225 revolutions per minute, (*a*) what should be the ratio of the large and small diameters, assuming the highest speed of the driven cone to be 400 revolutions per minute? (*b*) Thus designed, what would be the slowest speed at which the driven cone could run?

Ans. { (*a*) 1.78 : 1. (*b*) 126.56 rev.

(779) A pair of stepped cones, having 4 steps, each of 2-inch face, are required to be used with an open belt.

Given, largest diameter, 15″; smallest diameter, $4\frac{1}{2}$″; distance between centers, 20″; width of each step, 2″. Make an outline drawing of one of the cones, half size.

(780) Make a sketch showing how you would lace an 8-inch belt. Show the location of the holes by dimension figures.

(781) Two shafts lie in parallel planes, one above the other, but cross each other at an angle of 45°. Make a sketch showing how they might be connected by belt. Show two views, either a plan and elevation, or front and side elevation, and indicate by arrows the directions in which the shafts are to run.

(782) Two shafts lie in the same vertical plane, but make an angle of 30° with each other. Show how to connect them by belt so that they will revolve in opposite directions, and will run either backwards or forwards. Indicate the directions of rotation by arrows.

(783) A pulley A, upon a main shaft, drives a pulley B by means of a crossed belt. A spur gear C, on the shaft with B, drives a pinion D. A pulley E, on the shaft with D, drives a pulley F by an open belt.

Given, A, 30″ in diameter and making 60 revolutions per minute; B, 15″ diameter; C, 60 teeth; D, 15 teeth; E, 30″ diameter, and F, 10″ diameter. How many revolutions does pulley F make per minute, and in what direction does it turn relatively to A? Ans. 1,440 revolutions.

(784) A train of four gears is arranged as follows: Gear A drives gear B; gear B drives gear C; gear C drives D. A has 90 teeth and turns right-handed; B has 40 teeth; C has 80 teeth, and D, 90 teeth. How many turns does gear D make to every turn of A, and in what direction?

(785) Suppose the lead screw of a lathe to have a left-handed thread, the pitch being $\frac{1}{8}$″, and suppose the stud T (Fig. 398) to make $\frac{1}{2}$ as many turns as the spindle d_1 having 27 teeth, and f_1, 54 teeth. Find a set of change gears, the smallest gear to have 24 teeth, and the largest 96 teeth, to

cut threads from 4 to 16 per inch (including $11\frac{1}{2}$ per inch), making the number of gears as small as possible.

Ans.

Threads per Inch.	Gear on Stud.	Gear on Lead Screw.
4	96	24
5	96	30
6	96	36
7	96	42
8	96	48
9	96	54
10	48	30
11	48	33
$11\frac{1}{2}$	96	69
12	48	36
13	48	39
14	48	42
15	48	45
16	48	48

(786) A mangle rack and wheel are so proportioned that 5 turns of the wheel will produce one complete forward and back movement of the rack. If the gear turns uniformly, and has a pitch diameter of 10″, (*a*) how far will the rack travel one way with a *uniform* velocity? (*b*) What is the total travel of the rack one way? Ans. { (*a*) 5 ft. 2.832 in. (*b*) 6 ft. .832 in.

(787) In the clutch gearing, shown in Fig. 403, suppose the worm gear W to have 40 teeth; gear D_1, 80 teeth; gear F_1, 20 teeth, and the two bevel gears to be of the same size. If the worm is single-threaded, what is the ratio of the "quick return" through the spur and bevel gears to the slow motion through the worm and worm-wheel? Ans. 160 : 1.

(788) In Fig. 404, let the diameter of D_1 be $3\frac{1}{2}$″; of F_1, 26″; of D_2, $3\frac{1}{2}$″. What is the ratio of the belt to cutting speed, supposing the driving pulleys to be 30″ in diameter? Ans. 63.6 : 1.

(789) In the differential train shown in Fig. 406, let wheel D have 100 teeth and remain stationary. (*a*) If wheel F has 99 teeth, and A revolves + 10 times, how many

turns will F make, and in what direction? (b) If F should have 101 teeth, under the same conditions, how many turns would F make, and in what direction?

Ans. { (a) $-.101$ turn. (b) $+.099$ turn.

(790) In the same train, let D have 50 teeth and F 40 teeth. (a) If D makes $+1$ turn and $A+4$ turns, how many turns does F make, and in what direction? (b) If D makes -1 turn and $A+5$ turns, how many turns does F make?

NOTE.—Consider the train locked as usual. Fix arm and turn D back to the starting point; then, give D the stated number of turns, with the arm still fixed.

Ans. { (a) $+\frac{1}{4}$ turn. (b) $-2\frac{1}{2}$ turns.

(791) In Fig. 407, let F_1 have 20 teeth; D_1, 40 teeth; F, 20 teeth, and D, 200 teeth. If A makes $+6$ turns, how many turns does F_1 make? Ans. $+126$ turns.

(792) In the differential train shown in Fig. 23, pulleys A and B are connected by open belt. A and E are fast to

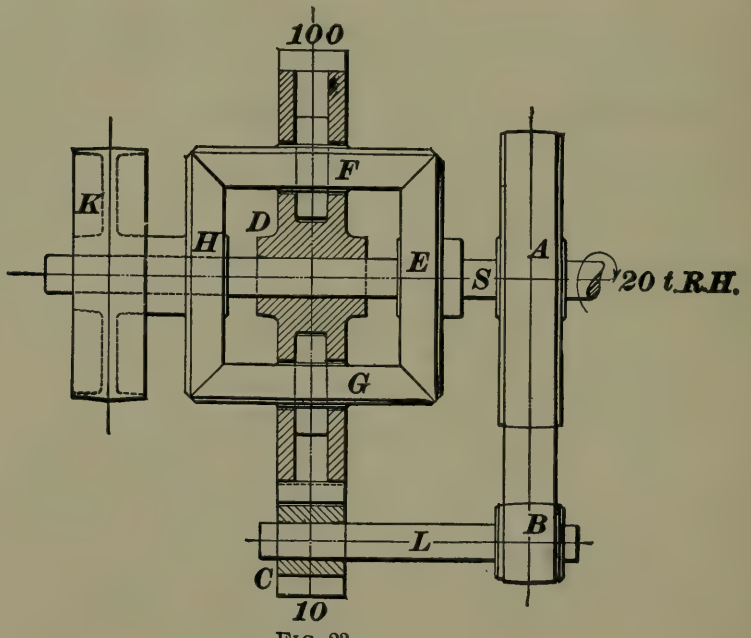

FIG. 23.

shaft S; D and H, and K are loose on S; H and K being one piece. Wheel D serves as an arm to carry gears F and G. B and C are keyed to shaft L.

Let H, F, E, and G each have 50 teeth; D, 100 teeth, and C, 10 teeth, and let the diameter of A be $12''$ and of B $3''$. If shaft S makes $+20$ turns, as indicated by the arrow, how many turns will pulley K make, and in what direction?

NOTE.—Calculate as though E were stationary at first. Then, fix arm D, and turn $E + 20$ times. Ans. -36 revolutions.

(793) In designing gear teeth, what object should be accomplished, (*a*) with regard to the motion transmitted, and (*b*) with regard to the shape and contact of the teeth?

(794) (*a*) What are the relative advantages of circular and diametral pitch? (*b*) The diametral pitch of a gear is $4\frac{1}{2}$; what is the circular pitch? (*c*) The circular pitch of a gear is $1.1424''$; what is the diametral pitch?

Ans. { (*b*) .698 inch. (*c*) $2\frac{3}{4}$.

(795) (*a*) Of what diameter is a 3-pitch gear having 30 teeth? (*b*) What should be the outside diameter of this gear? (*c*) What should be the working depth of the teeth? (*d*) The total depth?

Ans. { (*a*) 10 inches. (*b*) 10.667 inches. (*c*) .667 inch. (*d*) .709 inch.

(796) Define addendum; face; root; flank.

(797) (*a*) How many teeth should a 10-inch 48-pitch spur gear have? (*b*) A gear blank measures $14''$ in diameter, and is to be cut 6 pitch. How many teeth should the gear cutter be set to space?

Ans. { (*a*) 480 teeth. (*b*) 82 teeth.

(798) What is the diameter of a spur gear which has 70 teeth, and whose circular pitch is $1\frac{1}{4}''$? Ans. 27.852 inches.

(799) Given, the distance between the centers of two gears $= 15\frac{1}{2}''$. What must be their diameters, so that the ratio of their speeds will be as 3 is to 2?

Ans. $18\frac{3}{5}$ and $12\frac{2}{5}$ inches.

(800) (*a*) How long is the shortest arc of action that can be allowed with a pair of gears in running contact? (*b*) In the

epicycloidal system, why is the generating circle never made larger than $\frac{5}{8}$ of the diameter of the smallest wheel of the set?

(801) What can you say for and against both the epicycloidal and involute systems of gearing?

(802) It is desired to lay out the tooth curves for an epicycloidal internal gear and pinion; diametral pitch, 3; number of teeth in gear, 30; number in the pinion, 21. What diameter-generating circle should be used? Ans. $1\frac{1}{2}$ inches.

(803) Determine whether two 4-pitch involute gears of 12 and 16 teeth, respectively, would interfere when running together, without rounding the points of the teeth. Take the angle of obliquity $= 15°$.

(804) Lay out two bevel-gear blanks from the following data: Shafts at right angles; ratio of speed, 4:3; diametral pitch, 4; number of teeth in largest gear, 24; length of face of gears, $1\frac{1}{2}''$. Write all necessary dimensions on the drawing. It is not necessary to draw the hubs.

(805) A triple-threaded worm drives a worm gear having 40 teeth. How many revolutions of the wheel will be caused by 100 revolutions of the worm? Ans. 7.5 revolutions.

(806) Given, the distance between the centers of the shafts of a worm and worm-wheel $= 6''$; ratio of speeds $= 40:1$; pitch of (single-threaded) worm thread $= \frac{3}{4}''$; the thread and teeth are made according to the involute system. The length of the worm is to be $4''$, and the diameter of the worm shaft $1\frac{1}{4}''$. The teeth of the gear are to be proportioned according to Table 34, column 2.

(*a*) Calculate the number of teeth, pitch diameter, outside diameter, and whole depth of gear.

(*b*) Make a drawing showing the longitudinal section of the worm; write all needed dimensions on the drawing.

(807) A worm 2 inches in diameter, having 3 threads per inch, is to drive a spur gear having slanting teeth. What angle should the teeth make? Ans. 86° 58′, nearly.

(808) A ratchet having 72 teeth is attached to the end of a screw having $11\frac{1}{2}$ threads per inch. How much "feed" would the screw give for every ratchet tooth moved? Ans. $\frac{1}{828}$ inch.

MACHINE DESIGN.

(ARTS. 1901–2003.)

EXAMINATION QUESTIONS.

(959) What procedure is adopted in estimating the cost of making a machine?

(960) What is a shrink rule, and why is it used?

(961) (*a*) What are chilled castings? (*b*) What is the chief difficulty encountered in using cast iron?

(962) (*a*) Name the different kinds of screw threads. (*b*) Describe the United States standard (U. S. S.) thread.

(963) Calculate the diameter at the bottom of the thread for the following U. S. S. screws: $\frac{1}{2}''$, $\frac{7}{8}''$, $1\frac{1}{4}''$, and $2''$ diameter.

(964) (*a*) Calculate the number of threads per inch for the following U. S. S. screws: $\frac{1}{4}''$, $\frac{5}{8}''$, $1''$, and $1\frac{1}{2}''$ diameter. (*b*) What is the pitch in each case?

(965) (*a*) What is the object of using multiple-threaded screws? (*b*) If a triple-threaded screw has a pitch of $\frac{1}{2}''$, what is the divided pitch?

(966) Why are triangular threads more suitable for fastenings than square threads?

(967) Calculate the nominal diameter of a wrought-iron bolt subjected to a varying tensile stress of 11,800 lb.

SUGGESTION.—See Table 28, for proper factor of safety.

Ans. $1\frac{1}{2}''$.

(968) Calculate the diameter of the bolt in the last example by taking the value of S_t as 6,000 lb., as recommended in Art. **1935.** Can you suggest any reason why the diameter here obtained should be used instead of that obtained in example 967?

For notice of copyright, see page immediately following the title page.

(969) Find (*a*) the outside diameter; (*b*) the diameter at the root, and (*c*) the number of threads in the nut for a single square-threaded screw to transmit motion to a load of 12,000 lb.

Ans. { (*a*) $2\frac{1}{2}''$. (*b*) $2''$. (*c*) 10 threads.

(970) Calculate the various dimensions of a finished bolt and hexagonal nut, with washer, the bolt being $\frac{7}{8}''$ in diameter and $4''$ long under the head. Make a full-sized drawing showing nut on bolt and the bolt threaded for $1\frac{3}{4}''$ of its length. Show a hexagonal bolt head.

(971) Make a drawing of a wrench similar to that shown at *A*, Fig. 606, which will fit the nut in example 970. Take length of wrench as $16''$. Draw to a half size scale.

(972) A wrought-iron eye bolt, similar to that shown in Fig. 612, is subjected to a varying tensile stress of 2,500 lb. Calculate the values of a, b, d, and d_1. (See Table 28, for factor of safety.)

(973) (*a*) What is the object of using a jam-nut? (*b*) For what reason should the smaller nut be placed at the bottom?

(974) Make a drawing of the locking device shown in Fig. 623 to a full size scale, taking the diameter of the bolt as $1''$.

(975) What keeps the nut from turning in the devices shown in Figs. 628 and 629? Is not the principle the same in both? If so, why?

(976) Make a drawing of the knuckle joint shown in Fig. 642. Take d equal to $1\frac{1}{4}''$, and make drawing half size.

(977) Calculate the dimensions of an ordinary sunk key for a shaft $4''$ in diameter. Ans. $1'' \times \frac{11}{16}''$.

(978) Calculate the dimensions of a key for a $12''$ shaft by formula **233.** Ans. $3'' \times 2''$.

(979) Calculate the dimensions of a key for a driving pulley on a $2\frac{7}{16}''$ shaft. Ans. $\frac{11}{16}'' \times \frac{7}{16}''$.

(980) Calculate the dimensions of a feather key for a shaft $1\frac{1}{2}''$ in diameter. Ans. $\frac{1}{4}'' \times \frac{3}{8}''$.

(981) A pulley transmitting 1.85 H. P. is keyed to a $2\frac{7}{16}''$ shaft running at 110 revolutions per minute. Calculate the dimensions of a key for this pulley. Ans. $\frac{7}{16}'' \times \frac{1}{4}''$.

(982) Make a drawing of a rod, cotter, and socket (all of wrought iron) similar to that shown in Fig. 658, assuming that $S_t = 6{,}000$ lb. per sq. in., and the load or pull on the rod = 7,000 lb. Make drawing half size, and take taper of cotter as $\frac{1}{32}$.

(983) Find the diameter and length of a steel end journal supporting a load of 5 tons. Take S_f as 14,000 lb. per sq. in. and the pressure per square inch of projected area as 400 lb. Ans. $3'' \times 8\frac{3}{8}''$.

(984) What should be the diameter and length of a neck journal for a steel shaft which is subjected to a total load of 15,000 lb.? Take p as 1,200 lb. per sq. in. of projected area and S_f as 14,000 lb. per sq. in. Ans. $2'' \times 6\frac{1}{4}''$.

(985) The diameter and length of a certain journal were calculated to be $1\frac{1}{2}''$ and $2\frac{1}{8}''$, respectively. For certain reasons it was desired to increase the length to $2\frac{1}{2}''$; what should be the new diameter? Ans. $1\frac{19}{32}''$.

(986) An 8″ shaft is subjected to a thrust of 15,000 lb. Assuming 6 collars to be used, find the diameter and thickness of each. Ans. $10\frac{7}{8}''$ and $1\frac{3}{16}''$.

(987) Find the diameter of a cast-iron pivot journal which supports a load of 1,200 lb., and turns at the rate of 90 R. P. M. Ans. $2\frac{7}{16}''$.

(988) (*a*) Find the diameter to which a 10″ solid steel shaft should be increased in order that it may have a hole through it and still be of the same strength, assuming the hole to be four-sevenths of the outside diameter. (*b*) What is the diameter of the hole? (*c*) What is the difference in weights per foot in length of the two shafts?

Ans. { (*a*) $10\frac{3}{5}''$, nearly. (*b*) 6″, nearly. (*c*) 76 lb.

(989) (*a*) Determine the pitch of a screw with triangular threads and a diameter of $3\frac{1}{4}''$; (*b*) of a screw $7''$ in diameter, with square threads; (*c*) of a screw $12''$ in diameter, with trapezoidal threads.

Ans. (*a*) .3″. (*b*) 1.4″. (*c*) 1.6″.

(990) (*a*) In each of the cases of the last example, determine the number of threads per inch. (*b*) Calculate, also, the diameter of bolt at roots of thread.

Ans. (*b*) (*a*) $2\frac{7}{8}$. (*b*) $5\frac{5}{8}''$. (*c*) $9\frac{9}{16}''$.

(991) (*a*) Explain fully by diagram or otherwise the relation between the angle of the thread, the friction between thread and nut, and the force tending to burst the nut. (*b*) For what purposes are the triangular, the square, and the trapezoidal threads best adapted, and why?

(992) What should be the diameter of a wrought-iron bolt subjected to a load varying from zero to 15,600 lb.?

Ans. $2\frac{1}{4}''$.

(993) What steady load may be safely carried by two bolts, each $4''$ in diameter? Ans. 80 tons.

(994) (*a*) Calculate the outside diameter of the lead screw of a lathe which transmits motion against a pressure of 3,600 lb. (*b*) Calculate the necessary number of threads in the nut.

Ans. (*a*) $1\frac{3}{8}''$. (*b*) 10 threads.

(995) Design and draw, full size, a finished bolt with square head and hexagonal nut, the bolt being $6''$ long and subjected to a varying load of 3,200 lb.

(996) Calculate the proportions of the locking arrangement shown in Fig. 625, assuming the diameter of the bolt to be $3\frac{1}{2}''$. Draw it half size.

(997) (*a*) Calculate the breadth and thickness of a sunk key for a shaft $3\frac{1}{2}''$ in diameter; (*b*) for a shaft $5''$ in diameter; (*c*) for a shaft $1\frac{1}{2}''$ in diameter.

Ans. (*a*) $\frac{7}{8}'' \times \frac{9}{16}''$. (*b*) $1\frac{1}{4}'' \times \frac{13}{16}''$. (*c*) $\frac{3}{8}'' \times \frac{1}{4}''$.

(998) A fly-wheel transmitting 1,000 H. P. at 50 R. P. M. is keyed to a shaft 10″ in diameter by two steel keys, each 10″ long. Calculate the size of the keys. Ans. $2'' \times 1\frac{3}{8}''$.

(999) A pulley keyed to a shaft $4\frac{1}{2}''$ in diameter drives another pulley keyed to a shaft $2\frac{3}{4}''$ in diameter. Calculate the widths and thicknesses of the two keys by formulas **234** and **235.** Ans. { Driving pulley, $1\frac{1}{16}'' \times \frac{5}{8}''$. Driven pulley, $\frac{5}{8}'' \times \frac{7}{16}''$.

(1000) Calculate the dimensions of a sliding feather key for a shaft $1\frac{3}{4}''$ in diameter. Ans. $\frac{5}{16}'' \times \frac{3}{8}''$.

(1001) A pulley transmitting 6 H. P. is keyed to a shaft $3\frac{3}{4}''$ in diameter, making 135 R. P. M. Find the breadth and thickness of the sunk key. Ans. $\frac{3}{8}'' \times \frac{5}{8}''$.

(1002) A wrought-iron rod is fastened by means of a gib and cotter into a wrought-iron socket in the same manner as shown in Fig. 656. The rod is to sustain a steady pull of 6,000 lb. Design and make a drawing. Assume a taper of $\frac{1}{24}$, and take S_t as 6,000 lb. per sq. in.

(1003) Two straps each $3\frac{1}{2}''$ wide and $\frac{3}{4}''$ thick are fastened to a rod 3″ deep by a cotter and two gibs. Design the cotter and gibs and make a drawing of the arrangement. Taper to be $\frac{1}{24}$. See Fig. 661.

(1004) A wrought-iron rod is fastened by a steel cotter. The diameter of the rod is $2\frac{1}{2}''$. Calculate the dimensions of the cotter. Ans. $2\frac{1}{2}'' \times \frac{5}{8}''$.

(1005) A wrought-iron piston rod is $3\frac{1}{2}''$ in diameter where it passes through the piston. Which method will leave the rod the stronger to resist tensile stress, cutting a standard thread and using a nut, or using a cotter?

(1006) (*a*) Find the diameter and length of a cast-iron end journal subjected to a load of $2\frac{1}{2}$ tons, assuming the length to be $1\frac{1}{2}$ times the diameter, and the safe stress 4,250 lb. per sq. in. (*b*) What is the pressure per square inch of projected area? Ans. { (*a*) $3'' \times 4\frac{1}{2}''$. (*b*) 370 lb.

(1007) Find the diameter and length of a wrought-iron end journal bearing a load of 5 tons, assuming the length

equal to the diameter, and a safe stress of 8,500 lb. per sq. in. Ans. $2\frac{1}{2}'' \times 2\frac{1}{2}''$.

(1008) Calculate the dimensions of a steel end journal subjected to a load of 17,800 lb.; direction, variable. The bearing pressure is not to exceed 750 lb. per sq. in. of projected area. Ans. $3\frac{5}{8}'' \times 6\frac{1}{2}''$

(1009) Calculate the dimensions of a wrought-iron end journal sustaining a load of 1,750 lb.; direction, constant. The pressure per square inch of projected area is not to exceed 275 lb. Ans. $1\frac{5}{8}'' \times 4''$.

(1010) Calculate the dimensions of a wrought-iron end journal, assuming the length to be twice the diameter and the bearing pressure not to exceed 550 lb. per sq. in. The load on the journal is 3,750 lb. Ans. $1\frac{7}{8}'' \times 3\frac{3}{4}''$.

(1011) Calculate the dimensions of the steel journal of a car axle bearing a load of 10,000 lb., which may be considered variable in direction on account of the spring of the car. Speed of car is 40 miles per hour; diameter of truck wheel, $2\frac{3}{4}$ ft., and the allowable bearing pressure is $p = \frac{220{,}000}{N}$, where N is the number of revolutions per minute. Design and draw the journal.

(1012) (*a*) Calculate the dimensions of a wrought-iron neck journal, assuming the length equal to $2\frac{1}{2}$ times the diameter. The load is 9,600 lb., variable in direction. (*b*) What is the pressure per square inch of projected area?

Ans. { (*a*) $2\frac{1}{8}'' \times 5\frac{5}{16}''$, say $5\frac{1}{4}''$. (*b*) 860 lb. per sq. in.

(1013) Find the diameter of a wrought-iron pivot running in gun-metal bearings, the load being 25 lb. and the number of revolutions 3,000 per minute. Ans. $1\frac{1}{8}''$.

(1014) What should be the diameter of a steel pivot (on gun-metal bearings) carrying a load of $4\frac{1}{2}$ tons and making 65 R. P. M.? Ans. $4\frac{3}{4}''$.

(1015) A shaft 6″ in diameter receives an end thrust of 7,800 lb. on 4 collars. Find the diameter and thickness of collars. Draw the portion of the shaft with collars. Scale $3'' = 1'$.

(1016) Calculate the diameter of a steel engine shaft 8 ft. long carrying a fly-wheel weighing 10 tons; the center of the wheel is 3 ft. from the center of one of the bearings. The engine develops 300 H. P. at 60 R. P. M., has a stroke of 48″, and a M. E. P. of 62 lb. per sq. in. Assume $S_s =$ 9,000 lb. per sq. in. Ans. $8\frac{1}{4}''$.

(1017) A line-shaft is required to transmit 90 H. P. at 110 R. P. M. The average bending moment, due to weights of pulleys, belt pull, etc., is about $\frac{3}{4}$ of the twisting moment. Assuming a wrought-iron shaft and a safe stress of 7,000 lb. per sq. in., find the diameter of the shaft. Ans. $4\frac{1}{4}''$.

(1018) The inner diameter of a hollow shaft is 6″, the outer diameter 13″. Find the diameter of a solid shaft of the same material and having the same strength. Ans. $12\frac{13}{16}''$.

(1019) In designing a propeller shaft, it is found that the proper diameter of a solid steel shaft is $16\frac{3}{4}''$. It is desired, however, to make the shaft hollow. Assuming the diameter of the hole to be $\frac{1}{2}$ the diameter of the shaft, find the inside and outside diameters of the hollow shaft. Ans: $\begin{cases} d_1 = 17\frac{1}{8}''. \\ d_2 = 8\frac{9}{16}''. \end{cases}$

(1020) Design and draw a universal joint for shafts $1\frac{1}{4}''$ in diameter. Draw full size.

(1021) Design and draw a flange coupling for a shaft $3\frac{1}{4}''$ in diameter. Draw half size.

(1022) Calculate the following for the solid flange coupling of a propeller shaft 11″ in diameter: (*a*) Number of bolts; (*b*) diameter of bolts; (*c*) diameter of bolt circle; (*d*) diameter of flange; (*e*) thickness of flange. See Fig. 674.

Ans. $\begin{cases} (a)\ 6 \text{ bolts}. \\ (b)\ 2\frac{5}{8}''. \\ (c)\ 16\frac{1}{4}''. \\ (d)\ 22\frac{3}{16}''. \\ (e)\ 3\frac{1}{4}'', \text{ nearly}. \end{cases}$

(1023) A wrought-iron pivot runs at a speed of 600 R. P. M. in gun-metal bearings. The load being 100 lb., what should be the diameter? Ans. 1″.

MACHINE DESIGN.

(ARTS. 2004–2074.)

EXAMINATION QUESTIONS.

(1024) For what purpose are bearings bushed?

(1025) For what reason are ball and socket bearings used?

(1026) A cast-iron gear makes 120 R. P. M. and transmits 20 H. P. If the pitch diameter is 30″, what should be (*a*) the circular pitch, and (*b*) the number of teeth?

Ans. { (*a*) 1.2401″. (*b*) 76 teeth.

(1027) Compute the leading dimensions for a spur gear, working under the following conditions: Diameter of pitch circle = 4 ft. 8″; revolutions per minute = 60; horsepower transmitted = 300.

(1028) Suppose a friction wheel faced with wood to drive another 6 ft. in diameter, at 110 revolutions per minute, the force pressing the wheels together being 280 lb. Take f equal to $\frac{1}{3}$ and calculate the horsepower. Ans. 5.864 H. P.

(1029) What is meant by counterbalancing a pulley?

(1030) (*a*) What is the diameter of wires composing a 1″ wire rope containing 42 wires? (*b*) What is the weight of this rope per foot of length?

(1031) What is the safe load for a crane chain, the links being forged from $1\frac{1}{4}$″ round iron? Ans. 10,312.5 lb.

(1032) When using divided bearings, how should the brasses be divided?

(1033) Design and draw a pedestal similar to the one described in Art. **2014,** and shown in Fig. 692, taking d equal to 14″, and using a scale of 3″ = 1 ft.

(1034) Of what materials are gears usually made?

For notice of copyright, see page immediately following the title page.

(1035) How many arms should be given a gear having a diameter of 56″ and a diametral pitch of $1\frac{1}{4}$″? Ans. 6 arms.

(1036) For what purposes may friction gearing be used?

(1037) When transmitting power by means of a hemp rope, what should be the ratio between the diameter of the pulley and that of the rope?

(1038) What should be the least value for the ratio of the diameter of a wire rope pulley to that of the rope?

(1039) What are gaskets, and for what are they used?

(1040) What are the seats or steps of a bearing, and for what purpose are they used?

(1041) For what purpose are loose disks used in connection with pivot bearings?

(1042) Design a pedestal similar to the one described in Art. **2011.** Take d equal to $3\frac{1}{2}$″, and use a scale of 6″ = 1 ft.

(1043) (*a*) What is a hanger? (*b*) A wall bracket?

(1044) A cast gear 44″ in diameter is to transmit 21 H. P. when making 50 R. P. M. What should be the least breadth of the teeth? Ans. $2\frac{1}{8}$″.

(1045) The circular pitch of a 24″ worm wheel is .5236″; if the worm has 4 threads, what is the efficiency? Take diameter of worm as $2\frac{1}{2}$″. Ans. 62.62%.

(1046) (*a*) Of what materials are belts made? (*b*) For what situations are rubber belts preferred?

(1047) What should be the least thickness of the rim of a crowning belt pulley having a diameter of 52″ and a breadth of 10″? Ans. $\frac{3}{8}$″.

(1048) The distance between two wire rope pulleys is 420 ft. What will be the deflection of the rope midway between the pulleys, if the rope is $\frac{7}{8}$″ in diameter, is composed of 42 wires, and the tension due to its weight is 2,023 lb.? Ans. 12 ft.

(1049) What is considered to be the greatest safe rim speed of a cast-iron pulley?

(1050) What are the advantages claimed for rope belting?

(1051) What horsepower may be transmitted by a rope wheel 18 ft. in diameter which is grooved for 24 turns of $1\frac{1}{4}''$ rope? R. P. M. = 72. Ans. 484.32 H. P.

(1052) The deflection of a $1\frac{1}{4}''$ wire rope having 42 wires is 9 ft. 3″; the distance between the pulleys being 386 ft., what is the tension due to the weight of the rope?

Ans. 4,511 lb.

(1053) Calculate the dimensions of the plate link gearing chain for a working load of 5,600 lb.

(1054) Design a wall bracket similar to the one described in Art. **2019.** Take d equal to $2\frac{1}{2}''$, and use a scale of $6'' = 1$ ft.

NOTE.—Pay particular attention to the last sentence of Art. **2019.**

(1055) A gear-wheel 40″ in diameter has 6 arms and a diametral pitch of $1\frac{1}{2}$. The breadth of the teeth being 6″, find the dimensions of the arms. Consider the arms as being elliptical in cross-section.

(1056) Power is transmitted by a $\frac{3}{4}''$ iron rope having 42 wires. Find (a) the horsepower transmitted when the speed of the rope is 5,000 ft. per min., distance between pulleys is 425 ft., and the diameter of the pulleys is 13 ft. (b) Find the greatest deflection in the rope.

Ans. { (a) 189 H. P.
((b) 14.7 ft.

(1057) How many arms should be given to a 21″ gear-wheel having 84 teeth? Ans. 5 arms.

(1058) Calculate the size of the tapering arms of a 4-arm pulley, 22″ in diameter, and with an 8″ face; a double belt is to be used.

(1059) The hub of a split pulley is 7″ long and $1\frac{3}{8}''$ thick. If the hub is held by 6 bolts, what should be the diameter of the bolts? Ans. $\frac{7}{8}''$.

(1060) Design the following and draw on one plate :

1. A belt pulley similar to the one shown in Fig. 720. Take diameter equal to 48″, face 12″, and bore $2\frac{1}{2}$″. Use a scale of 3″ = 1 ft.
2. A foot-step bearing similar to that shown in Fig. 698. Take d equal to 3″, and use a scale of 6″ = 1 ft.
3. A crane hook similar to that shown in Fig. 735, except that the swivel end shown at A should be used instead of the eye. Take d equal to $2\frac{1}{4}$″, and use a scale of 3″ = 1 ft.
4. A pipe flange as shown in Fig. 736. Take a equal to 12″, and use a scale of $1\frac{1}{2}$″ = 1 ft.

NOTE.—The dots in Table 52 indicate that the last dimension above them should be used.

(1061) What is the weight of 875 ft. of $1\frac{3}{4}$″ manila rope ?

Ans. 803.9 lb.

(1062) (a) Calculate the horsepower which can be transmitted by a $1\frac{3}{4}$″ cotton rope at a velocity of 3,800 ft. per minute. (b) What is the horsepower as estimated from the diagram, Fig. 723 ? Ans. (a) 38.223 H. P.

(1063) (a) What should be the diameter of the wires composing an iron wire rope transmitting 125 H. P. at a velocity of 4,900 ft. per minute ? (b) What should be the diameter of the pulley ? (c) Of the rope ? The rope is to contain 42 wires.

Ans. (a) .0694″.
(b) 9 ft. 10″.
(c) $\frac{5}{8}$″.

A KEY

TO ALL THE

QUESTIONS AND EXAMPLES

CONTAINED IN THE

EXAMINATION QUESTIONS

INCLUDED IN THIS VOLUME.

The Keys that follow have been divided into sections corresponding to the Examination Questions to which they refer. The answers and solutions have been numbered to correspond with the questions. When the answer to a question involves a repetition of statements given in the Instruction Paper, the reader has been referred to a numbered article, the reading of which will enable him to answer the question himself.

To be of the greatest benefit, the Keys should be used sparingly. They should be used much in the same manner as a pupil would go to a teacher for instruction with regard to answering some example he was unable to solve. If used in this manner, the Keys will be of great help and assistance to the student, and will be a source of encouragement to him in studying the various papers composing the Course.

ELEMENTARY MECHANICS.

(QUESTIONS 355–453.)

---

(355) Use formulas **18** and **8.**

Time it would take the ball to fall to the ground $= t =$ $\sqrt{\frac{2h}{g}} = \sqrt{\frac{2 \times 5.5}{32.16}} = .58484$ sec.

The space passed through by a body having a velocity of 500 ft. per sec. in .58484 of a second $= S = Vt = 500 \times .58484 = 292.42$ ft. Ans.

(356) Use formula **7.**

$$\frac{8\frac{0}{1\frac{0}{2}} \times 3.1416 \times 160}{60} = 55.85 \text{ ft. per sec.} \quad \text{Ans.}$$

(357) $160 \div 60 \times 7 = \frac{8}{21}$ revolution in $\frac{1}{7}$ sec. $360° \times \frac{8}{21} = 137\frac{1}{7}° = 137° 8' 34\frac{2}{7}''$. Ans.

(358) (*a*) See Fig. 20. $36'' = 3'$. $4 \div 3 = \frac{4}{3} =$ number of revolutions of pulley to one revolution of fly-wheel. $54 \times \frac{4}{3} = 72$ revolutions of pulley and drum per min. $100 \div \left(\frac{18}{12} \times 3.1416\right) = 21.22$ revolutions of drum to raise elevator 100 ft. $\frac{21.22}{72} \times 60 = 17.68$ sec. to travel 100 ft. Ans.

(*b*) $21.22 : x :: 30 : 60$, or $x = \frac{21.22 \times 60}{30} = 42.44$ rev.

For notice of the copyright, see page immediately following the title page.

per min. of drum. The diameter of the pulley divided by

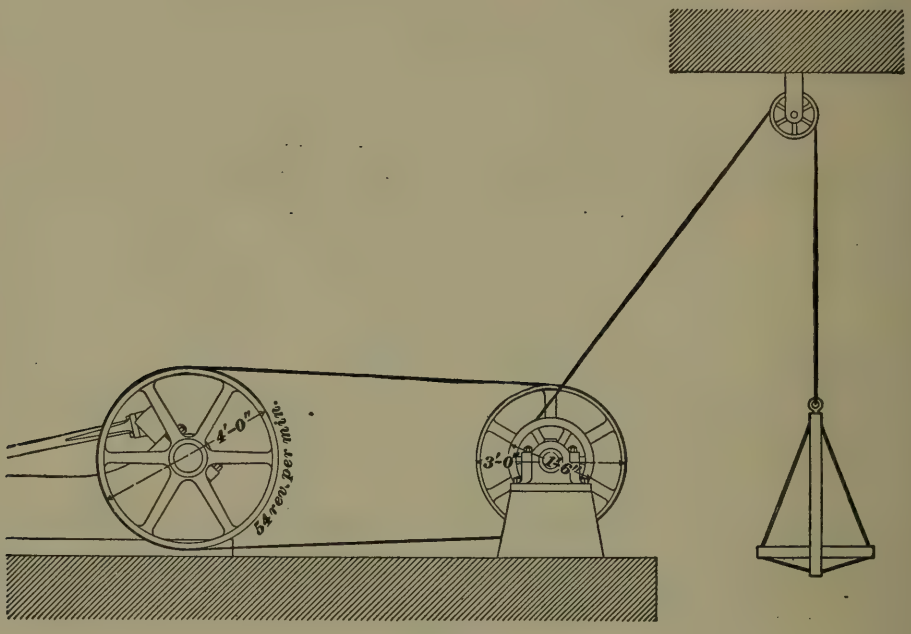

FIG. 20.

the diameter of the fly-wheel $= \frac{3}{4}$, which multiplied by $42.44 = 31.83$ revolutions per min. of fly-wheel. Ans.

(359) See Arts. **857** and **859.**

(360) See Art. **861.**

(361) See Arts. **843** and **871.**

(362) See Art. **871.**

(363) See Arts. **842, 886, 887,** etc.

The relative weight of a body is found by comparing it with a given standard by means of the balance. The absolute weight is found by noting the pull which the body will exert on a spring balance.

The absolute weight increases and decreases according to the laws of weight given in Art. **890;** the relative weight is always the same.

(364) See Art. **861.**

(365) See Art. **857.**

(366) See Art. **857.**

(367) If the mountain is at the same height above, and the valley at the same depth below sea-level respectively, it will weigh more at the bottom of the valley.

(368) $\frac{31,680}{5,280} = 6$ miles. Using formula **12,** $d^2 : R^2 :: W : w$, we have $w = \frac{R^2 W}{d^2} = \frac{3,960^2 \times 20,000}{3,966^2} = 19,939.53+$ lb. $= 19,939$ lb. $8\frac{1}{2}$ oz. Ans.

(369) Using formula **11,** $R : d :: W : w$, we have $w = \frac{d W}{R} = \frac{3,958 \times 20,000}{3,960} = 19,989.89$ lb. $= 19,989$ lb. $14\frac{1}{4}$ oz. Ans.

(370) See Art. **870.**

(371) See Art. **894.**

(372) The velocity which a body may have at the instant the time begins to be reckoned.

(373) Because the man after jumping tends to continue in motion with the same velocity as the train, and the sudden stoppage by the earth causes a shock, the severity of which varies with the velocity of the train.

(374) See Arts. **870** and **871.**

(375) See Art. **872.**

(376) That force which will produce the same final effect upon a body as all the other forces acting together is called the resultant.

(377) (*a*) If a 5-in. line $= 20$ lb., a 1-in. line $= 4$ lb. $1 \div 4 = \frac{1}{4}$ in. $= 1$ lb. Ans. (*b*) $6\frac{1}{4} \div 4 = 1.5625$ in. $= 6\frac{1}{4}$ lb. Ans.

(378) Those forces by which a given force may be

replaced, and which will produce the same effect upon a body.

(379) Southeast, in the direction of the diagonal of a square. See Fig. 21.

FIG. 21.

(380) $4'\ 6'' = 54''$. $54 \times 2 \times \frac{3}{4} \times .261 = 21.141$ lb. = weight of lever. Center of gravity of lever is in the middle, at a, Fig. 22, $27''$ from each end. Consider that the lever has no weight. The center of gravity of the two weights is at b, at a distance from c equal to $\frac{47 \times 54}{47 + 71} = 21.508'' = bc$. Formula **20**, Art. **911.**

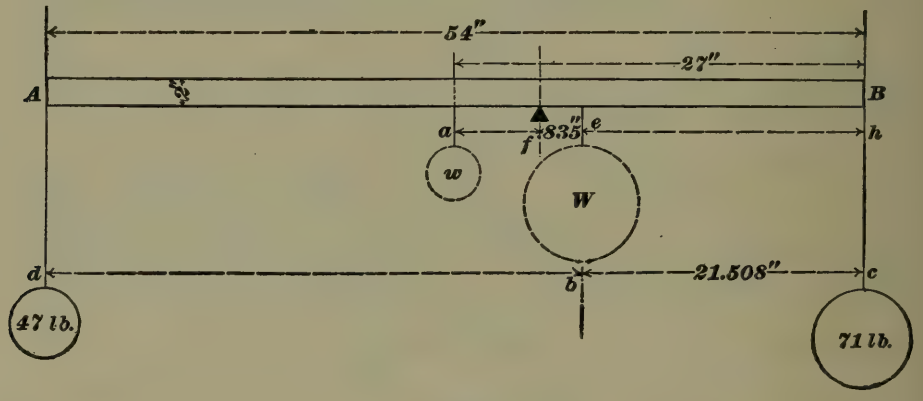

FIG. 22.

Consider both weights as concentrated at b, that is, imagine both weights removed and replaced by the dotted weight W, equal to $71 + 47 = 118$ lb. Consider the weight of the bar as concentrated at a, that is, as if replaced by a weight $w = 21.141$ lb. Then, the distance of the balancing point f, from e, or fe, $= \frac{21.141 \times 5.492}{21.141 + 118} = .834''$, since $ae = 27 - 21.508 = 5.492''$. Finally, $fe + eh = fh = .834 + 21.508 = 22.342'' =$ the short arm. Ans. $54 - 22.342 = 31.658'' =$ long arm. Ans.

(381) See Fig. 23

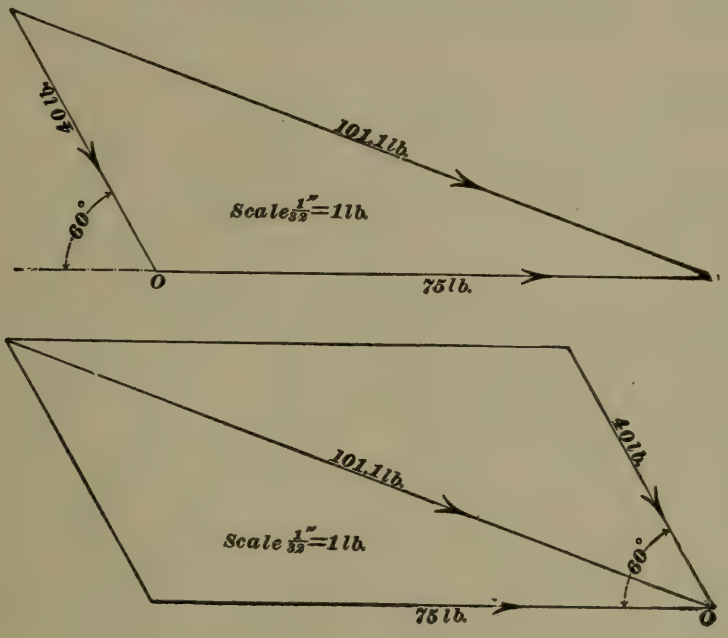

FIG. 23.

(382) See Fig. 24.

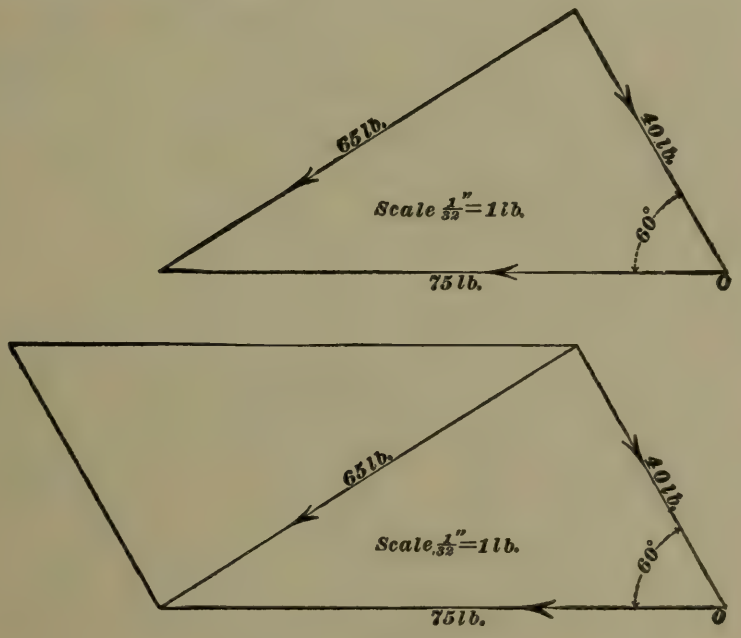

FIG. 24.

(383) $46 - 27 = 19$ lb., acting in the direction of the force of 46 lb. Ans.

(384) (*a*) $18 \times 60 \times 60 = 64{,}800$ miles per hour Ans
(*b*) $64{,}800 \times 24 = 1{,}555{,}200$ miles. Ans.

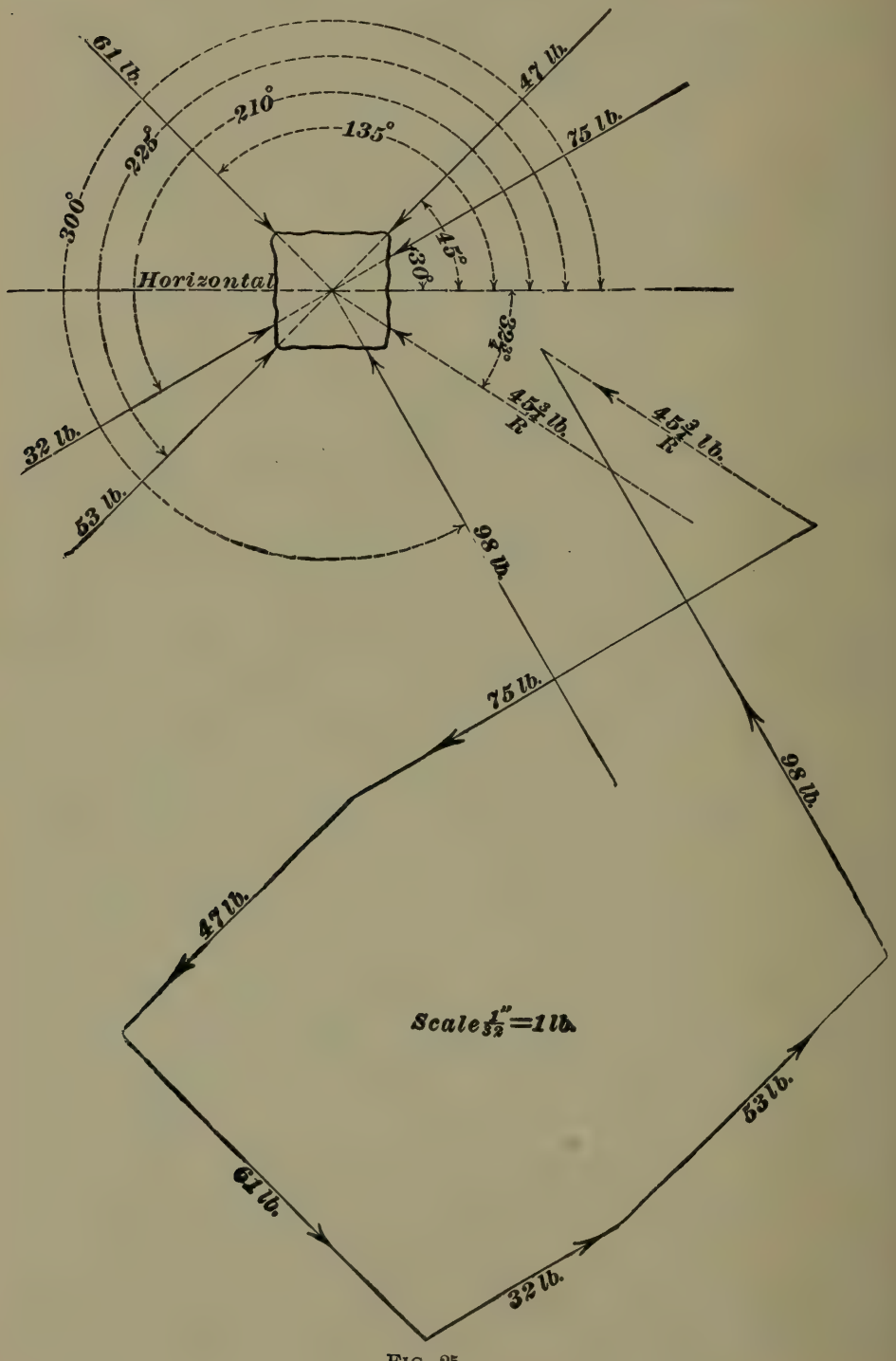

FIG. 25.

(385) (*a*) 15 miles per hour $= \frac{15 \times 5{,}280}{60 \times 60} = 22$ ft. per sec. As the other body is moving 11 ft. per sec., the distance between the two bodies in one second will be $22 + 11 = 33$ ft., and in 8 minutes the distance between them will be $33 \times 60 \times 8 = 15{,}840$ ft., which, divided by the number of feet in one mile, gives $\frac{15{,}840}{5{,}280} = 3$ miles. Ans.

(*b*) As the distance between the two bodies increases 33 ft. per sec., then, 825 divided by 33 must be the time required for the bodies to be 825 ft. apart, or $\frac{825}{33} = 25$ sec. Ans.

(386) See Fig. 25.

(387) (*a*) Although not so stated, the velocity is evidently considered with reference to a point on the shore. $10 - 4 = 6$ miles an hour. Ans.

(*b*) $10 + 4 = 14$ miles an hour. Ans.

(*c*) $10 - 4 + 3 = 9$, and $10 + 4 + 3 = 17$ miles an hour. Ans.

(388) See Fig. 26.

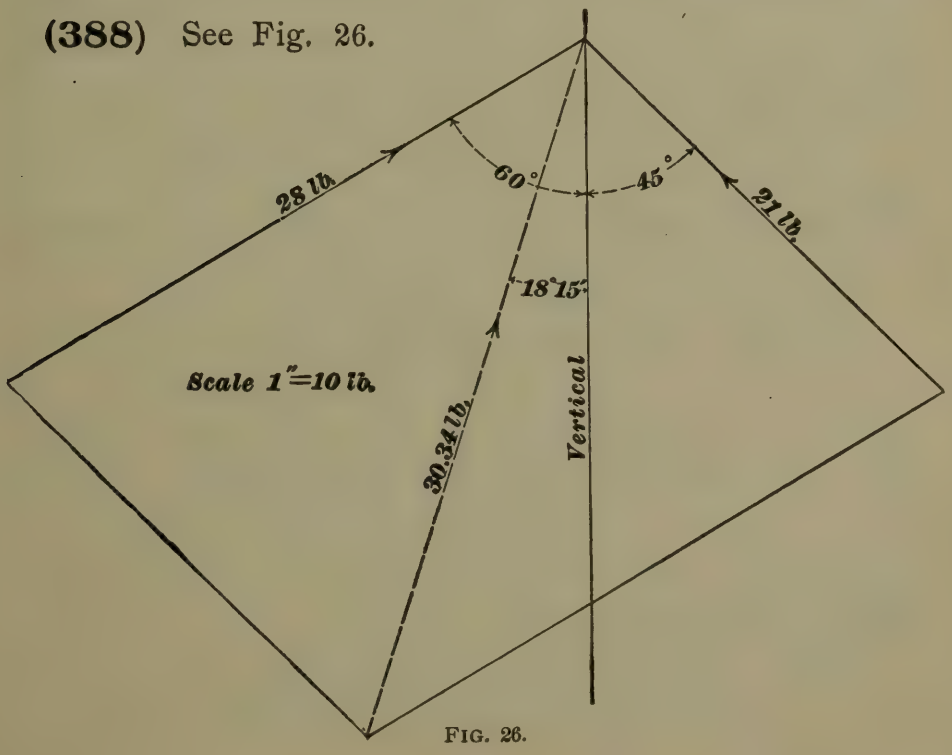

FIG. 26.

(389) See Fig. 27. By rules **2** and **4**, Art. **754**, $b\,c = 87 \sin 23° = 87 \times .39073 = 33.994$ lb., $a\,c = 87 \cos 23° = 87 \times .92050 = 80.084$ lb.

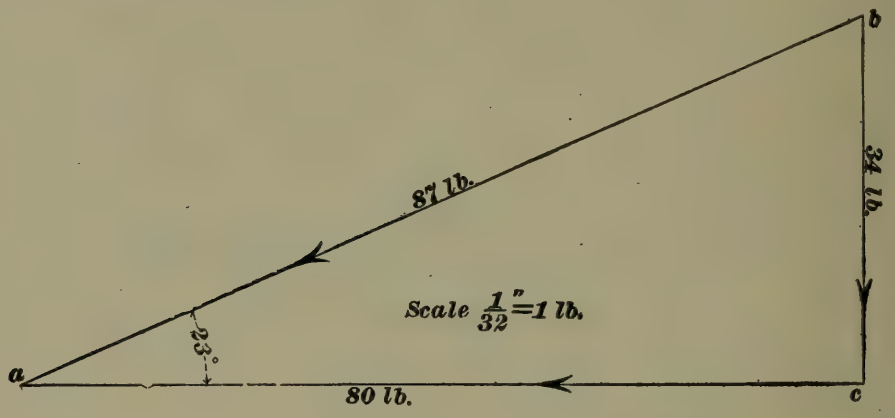

FIG. 27.

(390) See Fig. 28. (*b*) By rules **2** and **4**, Art. **754**, $b\,c = 325 \sin 15° = 325 \times .25882 = 84.12$ lb. Ans.

(*a*) $a\,c = 325 \cos 15° = 325 \times .96593 = 313.93$ lb. Ans.

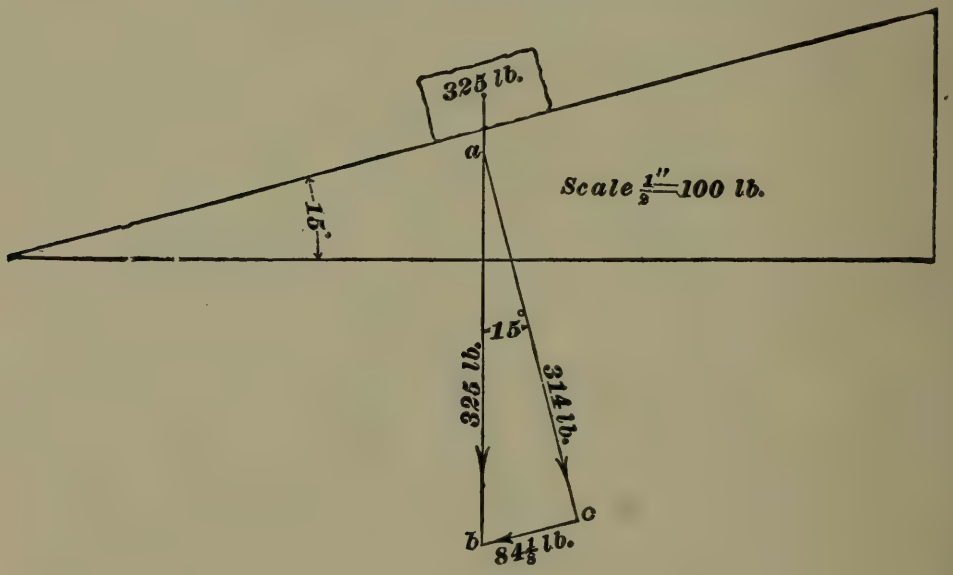

FIG. 28.

(391) Use formula **10.**

$$m = \frac{W}{g} = \frac{125}{32.16} = 3.8868. \quad \text{Ans.}$$

(392) Using formula **10**, $m = \frac{W}{g}$, $W = m\,g = 53.7 \times 32.16 = 1{,}727$ lb. Ans.

(393) (*a*) Yes. (*b*) 25. (*c*) 25. Ans.

(394) (*a*) Using formula **12**, $d^2 : R^2 :: W : w$, $d = \sqrt{\frac{R^2\,W}{w}} = \sqrt{\frac{4{,}000^2 \times 141}{100}} = 4{,}749.736$ miles. $4{,}749.736 - 4{,}000 = 749.736$ miles. Ans.

(*b*) Using formula **11**, $R : d :: W : w$, $d = \frac{R\,w}{W} = \frac{4{,}000 \times 100}{141} = 2{,}836.88$ miles. $4{,}000 - 2{,}836.88 = 1{,}163.12$ miles. Ans.

(395) (*a*) Use formula **18**,

$$t = \sqrt{\frac{2\,h}{g}} = \sqrt{\frac{2 \times 5{,}280}{32.16}} = 18.12 \text{ sec.} \quad \text{Ans.}$$

(*b*) Use formula **13**, $v = g\,t = 32.16 \times 18.12 = 582.74$ ft. per sec., or, by formula **16**, $v = \sqrt{2\,g\,h} = \sqrt{2 \times 32.16 \times 5{,}280} = 582.76$ ft. per sec. Ans.

The slight difference in the two velocities is caused by not calculating the time to a sufficient number of decimal places, the actual value for t being 18.12065 sec.

(396) Use formula **25.** Kinetic energy $= W\,h = \frac{W\,v^2}{2\,g}$.

$$W\,h = 160 \times 5{,}280 = 844{,}800 \text{ ft.-lb.}$$

$$\frac{W\,v^2}{2\,g} = \frac{160 \times 582.76^2}{2 \times 32.16} = 844{,}799 \text{ ft.-lb.} \quad \text{Ans.}$$

(397) (*a*) Using formulas **15** and **14**,

$h = \frac{v^2}{2\,g} = \frac{2{,}360^2}{2 \times 32.16} = 86{,}592$ ft. $= 16.4$ miles. Ans. (*b*) $t = \frac{v}{g}$ = time required to go up or fall back. Hence, total time $= \frac{2\,v}{g}$ sec. $= \frac{2 \times 2{,}360}{60 \times 32.16} = 2.4461$ min. $= 2$ min. 26.77 sec. Ans.

(398) 1 hour = 60 min., 1 day = 24 hours; hence, 1 day = 60 × 24 = 1,440 min. Using formula **7**, $V = \frac{S}{t}$; whence, $V = \frac{8{,}000 \times 3.1416}{1{,}440} = 17.453+$ miles per min. Ans.

(399) (*a*) Use formula **25.**

Kinetic energy $= \frac{Wv^2}{2g} = \frac{400 \times 1{,}875 \times 1{,}875}{2 \times 32.16} = 21{,}863{,}339.55$ ft.-lb. Ans.

(*b*) $\frac{21{,}863{,}339.55}{2{,}000} = 10{,}931.67$ ft.-tons. Ans.

(*c*) See Art. **961.**

Striking force $\times \frac{6}{12} = 21{,}863{,}339.55$ ft.-lb.,

or striking force $= \frac{21{,}863{,}339.55}{\frac{6}{12}} = 43{,}726{,}679$ lb. Ans.

(400) Using formula **18**, $t = \sqrt{\frac{2h}{g}} = \sqrt{\frac{2 \times 200}{32.16}} = 3.52673$ sec., when $g = 32.16$.

$t = \sqrt{\frac{2 \times 200}{20}} = 4.47214$ sec., when $g = 20$.

$4.47214 - 3.52673 = 0.94541$ sec. Ans.

(401) See Art. **910.**

(402) See Art. **963.**

(403) (*a*) See Art. **962.**

$D = \frac{m}{V} = \frac{W}{gv}$. $v = \frac{800}{1{,}728}$. Hence, $D = \frac{W}{gv} = \frac{500}{32.16 \times \frac{800}{1728}} = 33.582$. Ans. (*b*) In Art. **962,** the density of water was found to be 1.941. (*c*) In Art. **963,** it is stated that the specific gravity of a body is the ratio of its density to the density of water. Hence, $\frac{33.582}{1.941} = 17.3 =$ specific gravity. If the weight of water be taken as 62.5 lb. per cu. ft., the specific gravity will be found to be 17.28. Ans.

(404) Assuming that it started from a state of rest, formula **13** gives $v = g\,t = 32.16 \times 5 = 160.8$ ft. per sec.

(405) Use formulas **17** and **13.** $h = \frac{1}{2} g t^2 = \frac{32.16}{2} \times 3^2 = 144.72$ ft., distance fallen at the end of third second.

$v = g t = 32.16 \times 3 = 96.48$ ft. per sec., velocity at end of third second.

$96.48 \times 6 = 578.88$ ft., distance fallen during the remaining 6 seconds.

$144.72 + 578.88 = 723.6$ ft. = total distance. Ans.

(406) See Art. **961.**

Striking force $\times \frac{\frac{1}{2}}{12} = 8 \times 8 = 64$. Therefore, striking force $= \frac{64}{\frac{\frac{1}{2}}{12}} = 1{,}536$ tons. Ans.

(407) See Arts. **901** and **902.**

(408) Use formula **19.**

Centrifugal force = tension of string $= .00034\ W R N^2 = .00034 \times (.5236 \times 4^3 \times .261) \times \frac{15}{12} \times 60^2 = 13.38+$ lb. Ans.

(409) $(80^2 - 70^2) \times .7854 \times 26 \times .261 \div 2 =$ weight of $\frac{1}{2}$ of rim.

$$R = \frac{80 - 10}{2 \times 12} = \frac{35}{12} \text{ ft.}$$

According to Art. **904,** $F = .00034\ W R N^2 \div 3.1416 = .00034 \times \frac{(80^2 - 70^2) \times .7854 \times 26 \times .261}{2} \times \frac{35}{12} \times 175^2 \div 3.1416 = 38{,}641$ lb. Ans.

(410) (*a*) Use formulas **11** and **12.** $R : d :: W : w$, or $W = \frac{w R}{d} = \frac{1 \times 4{,}000}{100} = 40$ lb. Ans.

(*b*) $d^2 : R^2 :: W : w$, or $w = \frac{4{,}000^2 \times 40}{4{,}100^2} = 38.072$ lb. Ans

(411) See Art. **955.**

$$\frac{10{,}746 \times 354}{10 \times 33{,}000} = 11.5275 \text{ H. P.} \quad \text{Ans.}$$

(412) Use formula **12.**

$d^2 : R^2 :: W : w$, or $d = \sqrt{\frac{4{,}000^2 \times 2}{\frac{3}{16}}} = 13{,}064$ mi., nearly.

$13{,}064 - 4{,}000 = 9{,}064$ miles. Ans.

(413) Use formula **18.** $t = \sqrt{\frac{2h}{g}} = \sqrt{\frac{2 \times 50}{32.16}} =$ 1.7634 sec., nearly.

$1.7634 \times 140 = 246.876$ ft. Ans.

(414) $\frac{10}{30} = \frac{1}{3}$ sec. Use formula **17.**

$h = \frac{1}{2} g t^2 = \frac{1}{2} \times 32.16 \times \left(\frac{1}{3}\right)^2 = 1.78\frac{2}{3}$ ft. $= 1$ ft. 9.44 in. Ans.

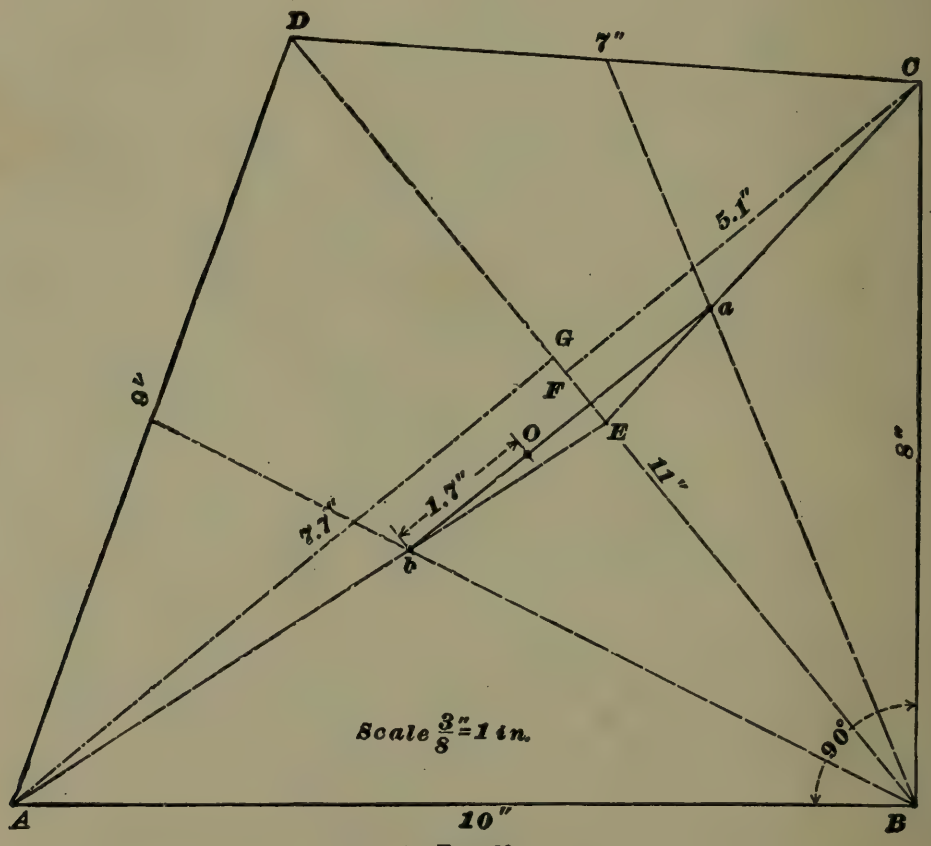

FIG. 29.

(415) See Arts. **906, 907.**

(416) See Arts. **908, 909.**

(417) No. It can only be counteracted by another equal couple which tends to revolve the body in an opposite direction.

(418) See Art. **914.**

(419) Draw the quadrilateral as shown in Fig. 29. Divide it into two triangles by the diagonal $B\ D$. The center of gravity of the triangle $B\ C\ D$ is found to be at a, and the center of gravity of the triangle $A\ B\ D$ is found to be at b (Art. **914**). Join a and b by the line $a\ b$, which, on being measured, is found to have a length of 4.27 inches. From C and A drop the perpendiculars $C\ F$ and $A\ G$ on the diagonal $B\ D$. Then, area of the triangle $A\ B\ D = \frac{1}{2}\ (A\ G \times B\ D)$, and area of the triangle $B\ C\ D = \frac{1}{2}\ (C\ F \times B\ D)$. Measuring these distances, $B\ D = 11''$, $C\ F = 5.1''$, and $A\ G = 7.7''$.

$$\text{Area } A\ B\ D = \frac{1}{2} \times 7.7 \times 11 = 42.35 \text{ sq. in.}$$

$$\text{Area } B\ C\ D = \frac{1}{2} \times 5.1 \times 11 = 28.05 \text{ sq. in.}$$

According to formula **20,** the distance of O, the center of gravity, from b is $\frac{28.05 \times 4.27}{28.05 + 42.35} = 1.7$. Therefore, the center of gravity is on the line $a\ b$ at a distance of $1.7''$ from b.

(420) See Fig. 30. The center of gravity lies at the geometrical center of the pentagon, which may be found as follows: From any vertex draw a line to the middle point of the opposite side. Repeat the operation for any other vertex, and the intersection of the two lines will be the desired center of gravity.

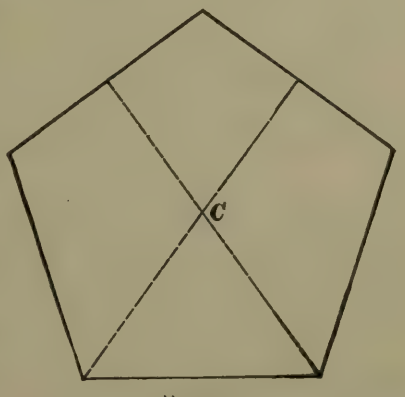

FIG. 30.

(421) See Fig. 31. Since any number of quadrilaterals can be drawn with the sides given, any number of answers can be obtained.

Draw a quadrilateral, the lengths of whose sides are equal to the distances between the weights, and locate a weight on each corner. Apply formula **20** to find the distance $C_1 W_1$; thus, $C_1 W_1 = \frac{9 \times 18}{9 + 21} = 5.4''$. Measure the distance $C_1 W_2$;

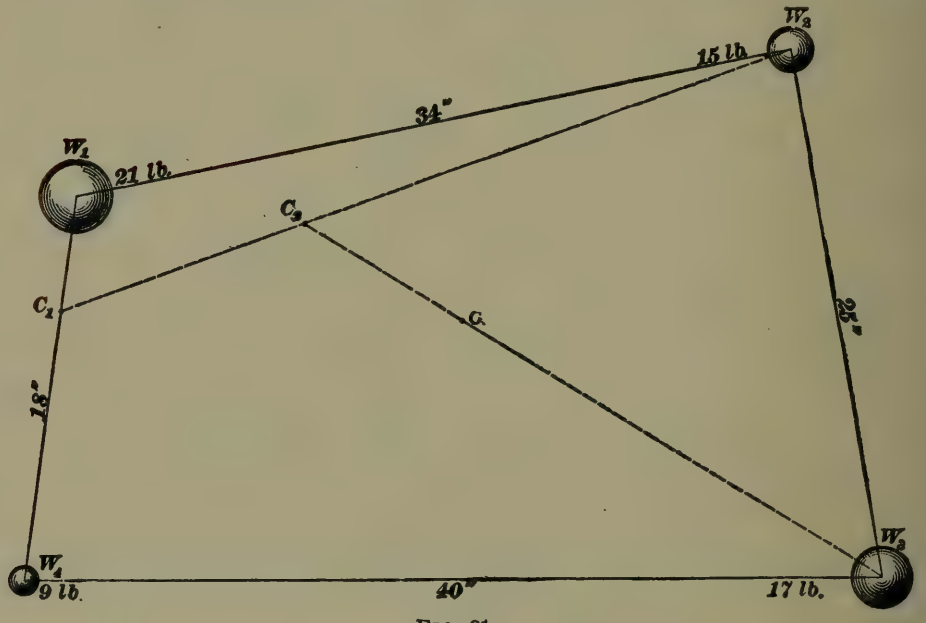

FIG. 31.

suppose it equals say 36″. Apply the formula again. $C_1 C_2 = \frac{15 \times 36}{15 + (9 + 21)} = 12''$. Measure $C_2 W_3$; it equals say 31.7″.

Apply the formula again. $C_2 C = \frac{17 \times 31.7}{17 + 15 + 9 + 21} = 8.7''$. C is center of gravity of the combination.

(422) Let $A\ B\ C\ D\ E$, Fig. 32, be the outline, the right-angled triangle cut-off being $E\ S\ D$. Divide the figure into two parts by the line $m\ n$, which is so drawn that it cuts off an isosceles right-angled triangle $m\ B\ n$, equal in area to $E\ S\ D$, from the opposite corner of the square.

The center of gravity of $A\,m\,n\,C\,D\,E$ is then at C_1, its geometrical center. $B\,m = 4$ in.; angle $B\,m\,r = 45°$; there-

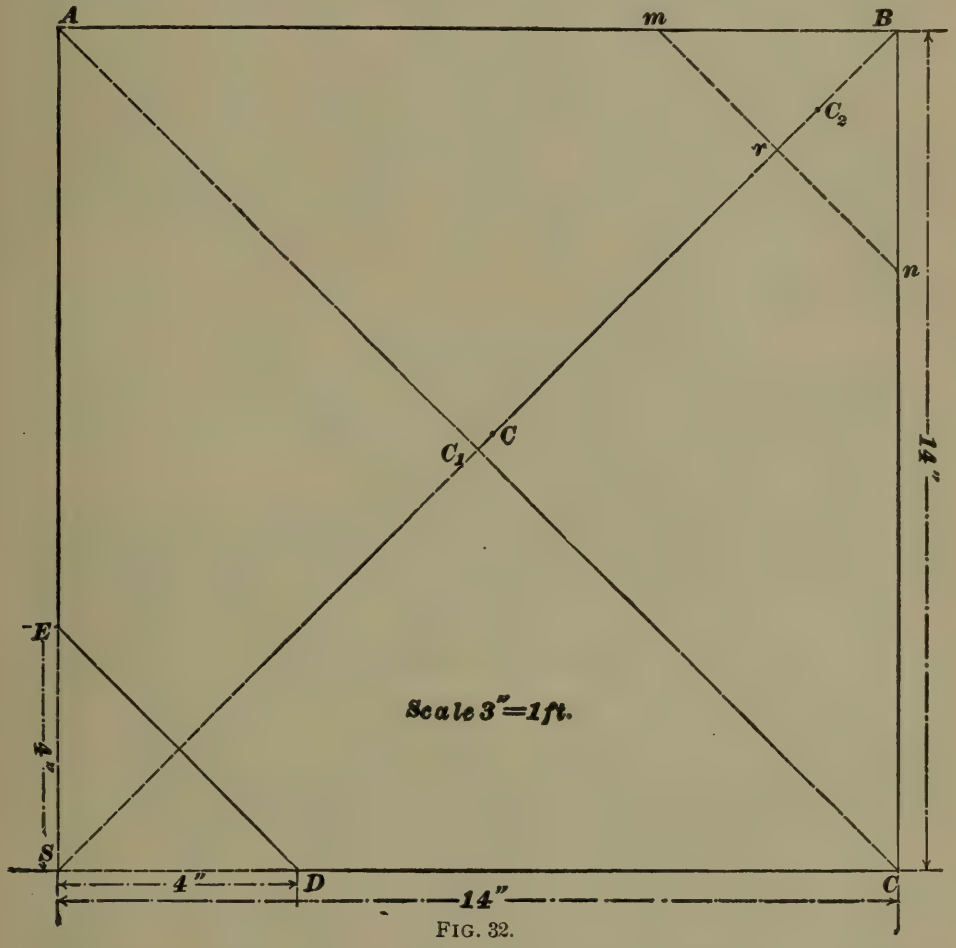

FIG. 32.

fore, $B\,r = B\,m \times \sin B\,m\,r = 4 \times .707 = 2.828$ in. C_2, the center of gravity of $B\,m\,n$, lies on $B\,r$, and $B\,C_2 = \frac{2}{3} B\,r = \frac{2}{3} \times 2.828 = 1.885$ in. $B\,C_1 = A\,B \times \sin B\,A\,C_1 = 14 \times \sin 45° = 14 \times .707 = 9.898$ in. $C_1\,C_2 = B\,C_1 - B\,C_2 = 9.898 - 1.885 = 8.013$ in.

Area $A\,B\,C\,D\,E = 14^2 - \frac{4 \times 4}{2} = 188$ sq. in. Area $m\,B\,n = \frac{4 \times 4}{2} = 8$ sq. in. Area $A\,m\,n\,C\,D\,E = 188 - 8 = 180$ sq. in.

The center of gravity of the combined area lies at C, at

a distance from C_1, according to formula **20** (Art. **911**), equal to $\frac{8 \times C_1 C_2}{180 + 8} = \frac{8 \times 8.013}{188} = .341$ in. $C_1 C = .341$ in. $B C = B C_1 - C_1 C = 9.898 - .341 = 9.557$ inches. Ans.

(423) (*b*) In one revolution the power will have moved through a distance of $2 \times 15 \times 3.1416 = 94.248''$, and the weight will have been lifted $\frac{1''}{4}$. The velocity ratio is then $94.248 \div \frac{1}{4} = 376.992$.

$376.992 \times 25 = 9{,}424.8$ lb. Ans.

(*a*) $9{,}424.8 - 5{,}000 = 4{,}424.8$ lb. Ans.

(*c*) $4{,}424.8 \div 9{,}424.8 = 46.95\%$. Ans.

(424) See Arts. **920** and **922.**

(425) Construct the prism *A B E D*, Fig. 33. From *E*, draw the line *E F*. Find the center of gravity of the

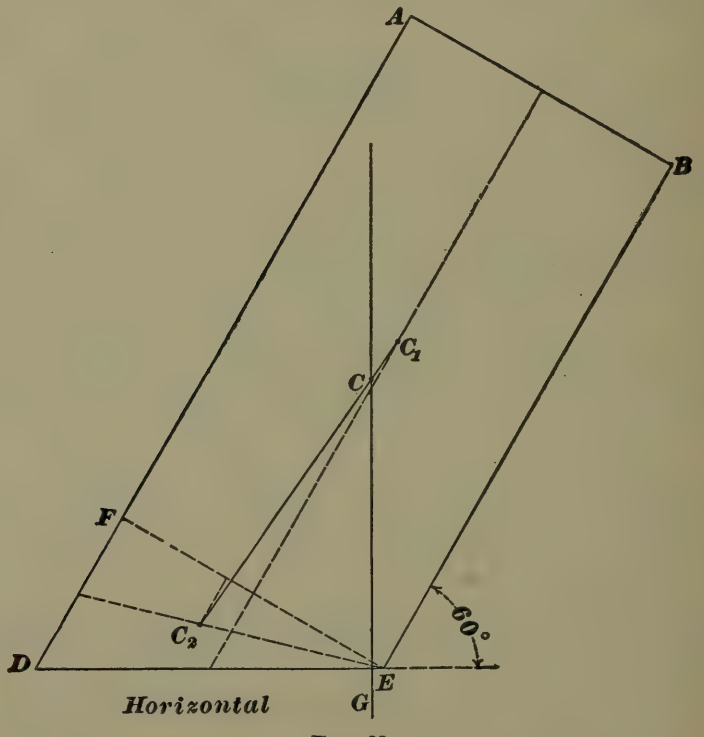

FIG. 33.

rectangle, which is at C_1, and that of the triangle, which is

at C_2. Connect these centers of gravity by the straight line $C_1\ C_2$ and find the common center of gravity of the body by the rule to be at C. Having found this center, draw the line of direction $C\ G$. If this line falls within the base, the body will stand, and if it falls without, it will fall.

(426) (*a*) 5 ft. 6 in. = 66″. $66 \div 6 = 11$ = velocity ratio. Ans.

(*b*) $5 \times 11 = 55$ lb. Ans.

(427) $55 \times .65 = 35.75$ lb. Ans.

(428) Apply formula **20.** 5 ft. = 60″. $\frac{35 \times 60}{180 + 35} =$ 9.7674 in., nearly, = distance from the large weight. Ans.

(429) (*a*) $1{,}000 \div 50 = 20$, velocity ratio. Ans. See Art. **945.** (*b*) 10 fixed and 10 movable. Ans. (*c*) $50 \div 95 = 52.63\%$. Ans.

(430) $P \times$ circumference $= W \times \frac{1}{8}$, or $60 \times 40 \times 3.1416 = W \times \frac{1}{8}$, or $W = 60 \times 40 \times 3.1416 \times 8 = 60{,}318.72$ lb. Since the efficiency of combination is 40%, the tension on the stud would be $.40 \times 60{,}318.72 = 24{,}127.488$ lb. Ans.

(431) (*a*) $\sqrt{20^2 + 5^2} = 20.616$ ft. = length of inclined plane.

$P \times$ length of plane $= W \times$ height, or $P \times 20.616 = 1{,}580 \times 5$.

$P = \frac{1{,}580 \times 5}{20.616} = 383.2$ lb. Ans. (*b*) In the second case, $P \times$ length of base $= W \times$ height, or $P \times 20 = 1{,}580 \times 5$; hence, $P = \frac{1{,}580 \times 5}{20} = 395$ lb. Ans.

(432) $W \times 2 = 42 \times 6$, or $W = \frac{42 \times 6}{2} = 126$ lb.

$126 + 42 = 168$ lb. $168 \times 1 = W' \times 12$, or $W' = \frac{168}{12} = 14$ lb. Ans.

(433) See Fig. 34. $P \times 14 \times 21 \times 19 = 2\frac{1}{2} \times 3\frac{1}{4} \times 2\frac{7}{8} \times 725$, or

$$P = \frac{2\frac{1}{2} \times 3\frac{1}{4} \times 2\frac{7}{8} \times 725}{14 \times 21 \times 19} = 3.032 \text{ lb.} \quad \text{Ans.}$$

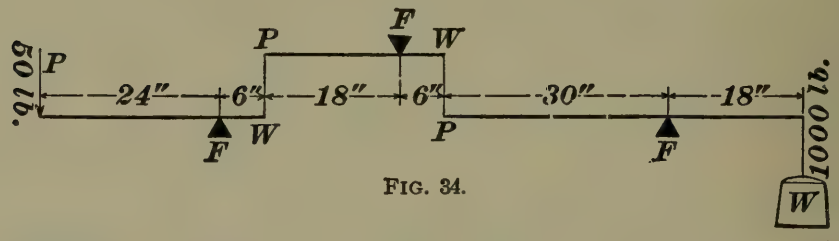

FIG. 34.

(434) See Fig. 35. (*a*) $35 \times 15 \times 12 \times 20 = 5 \times 3\frac{1}{2} \times 3 \times W$, or

$$W = \frac{35 \times 15 \times 12 \times 20}{5 \times 3\frac{1}{2} \times 3} = 2{,}400 \text{ lb.} \quad \text{Ans.}$$

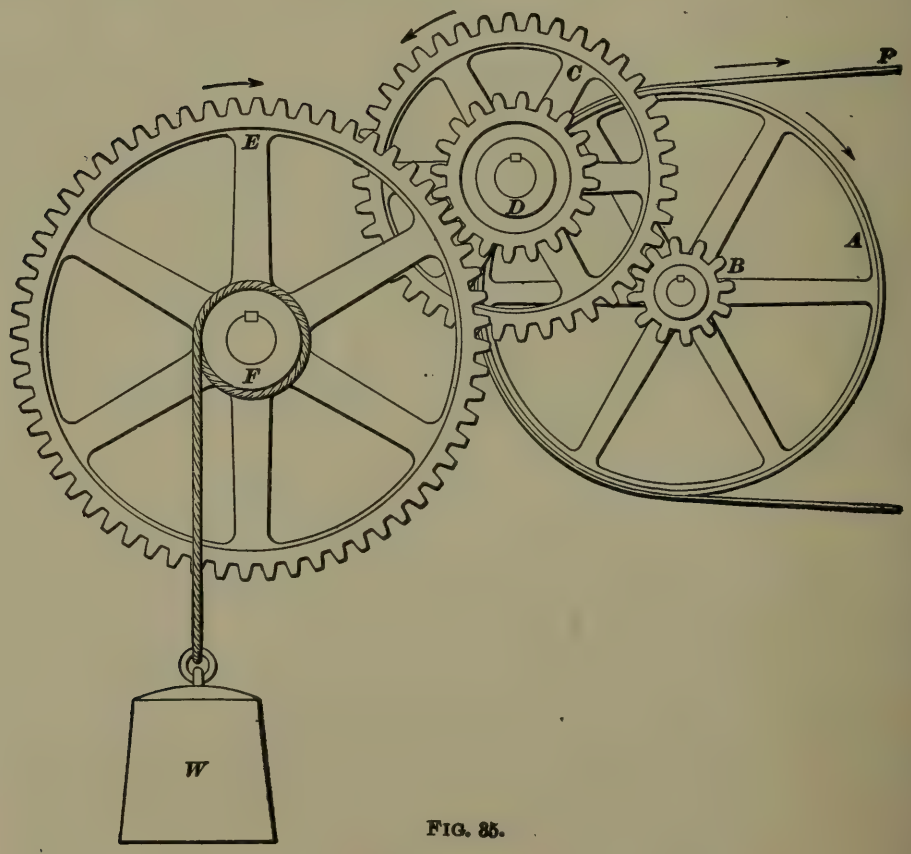

FIG. 35.

(*b*) $2{,}400 \div 35 = 68\frac{4}{7}$ = velocity ratio. Ans.

(*c*) $1{,}932 \div 2{,}400 = .805 = 80.5\%$. Ans.

(435) In Fig. 36, let the 12-lb. weight be placed at A, the 18-lb. weight at B, and the 15-lb. weight at D.

Use formula **20.**

$\frac{12 \times 15}{18 + 12} = 6''$ = distance $C_1 B$ = distance of center of

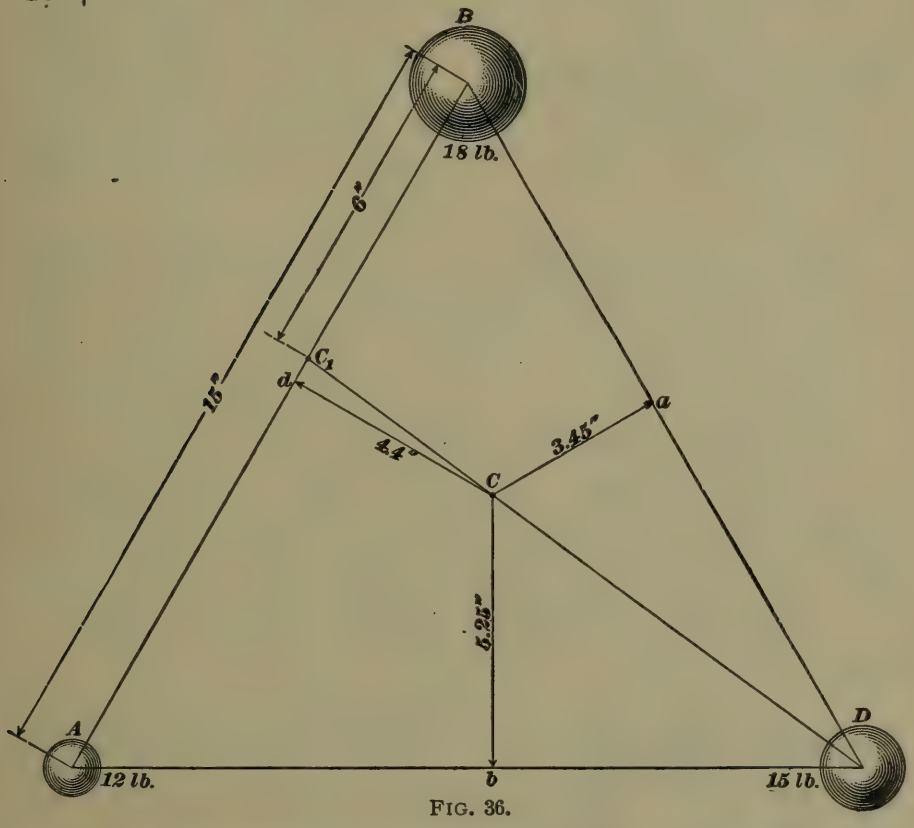

FIG. 36.

gravity of the 12 and 18-lb. weights from B. Drawing $C_1 D$, $C_1 C = \frac{15 \times C_1 D}{(12 + 18) + 15} = \frac{1}{3} C_1 D$. Measuring the distances of C from $B D$, $D A$, and $A B$, it is found that $C a = 3.45''$, $C b = 5.25''$, and $C d = 4.4''$. Ans.

(436) (*a*) Potential energy equals the work which the body would do in falling to the ground = $500 \times 75 =$ 37,500 ft.-lb. Ans.

(*b*) Using formula **18**, $t = \sqrt{\frac{2h}{g}} = \sqrt{\frac{2 \times 75}{32.16}} = 2.1597$ sec. = .035995 min., the time of falling.

$$\frac{37{,}500}{33{,}000 \times .035995} = 31.57 \text{ H. P.} \quad \text{Ans.}$$

(437) $127 \div 62.5 = 2.032 =$ specific gravity. Ans.

(438) $\frac{62.5}{1{,}728} \times 9.823 = .35529$ lb. Ans.

(439) Use formula **21**. $W = \left(\frac{2PR}{R-r}\right)$, or $\frac{2 \times 60 \times 6.5}{6.5 - 5.75} \times .48 = 499.2$ lb. Ans. See Fig. 37.

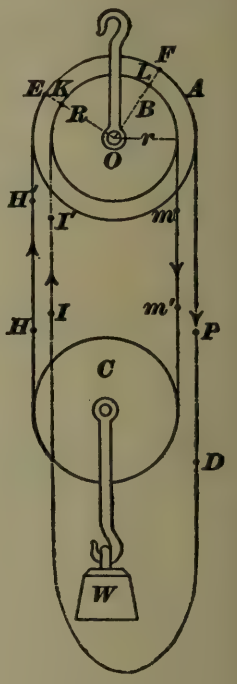

FIG. 37.

(440) See Art. **961**.

$F \times \left(\frac{3}{8} \div 12\right) = \frac{Wv^2}{2g} = \frac{1.5 \times 25^2}{2 \times 32.16}$, or

$$F = \frac{\frac{1.5 \times 25^2}{2 \times 32.16}}{\frac{3}{8} \div 12} = 466.42 \text{ lb.} \quad \text{Ans.}$$

(441) (*a*) $2{,}000 \div 4 = 500 =$ wt. of cu. ft. $500 \div 62.5 = 8 =$ specific gravity. Ans.

(*b*) $\frac{500}{1{,}728} = .28935$ lb. Ans.

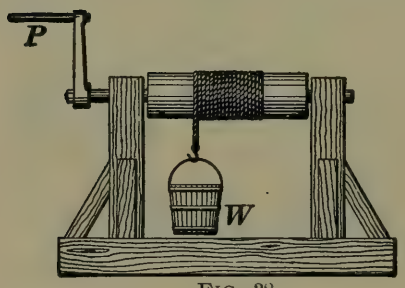

FIG. 38.

(442) See Fig. 38. $14.5 \times 2 = 29$. $30 \times 29 = W \times 5$, or $W = \frac{30 \times 29}{5} = 174$ lb. Ans.

(443) $75 \times .21 = 15.75$ lb. Ans.

(444) (*a*) $900 \times 150 = 135{,}000$ ft.-lb. Ans.

$\frac{135{,}000}{15} = 9{,}000$ ft.-lb. per min. Ans.

(*b*) $\frac{9{,}000}{33{,}000} = \frac{3}{11}$ H. P. Ans.

(445) $900 \times .18 \times 2 = 324$ lb. = force required to overcome the friction. $900 + 324 = 1{,}224$ lb. = total force.

$$\frac{1{,}224 \times 150}{15 \times 33{,}000} = .37091 \text{ H. P.} \quad \text{Ans.}$$

(446) $18 \div 88 = .2045$. Ans.

(447) See Art. **962.** $D = \dfrac{W}{gV} = \dfrac{1{,}200}{32.16 \times 3} = 12.438$. Ans.

(448) See Fig. 39. $125 - 47.5 = 77.5$ lb. = downward pressure.

$77.5 \div 4 = 19.375$ lb. = pressure on each support. Ans.

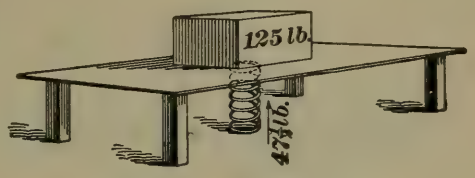

FIG. 39.

(449) See Fig. 40.

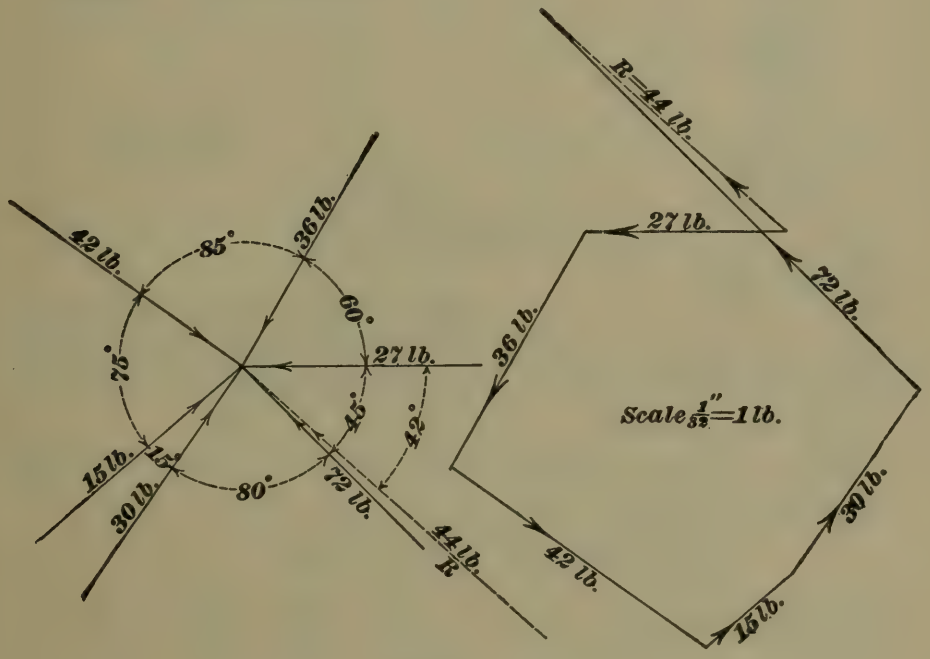

FIG. 40.

(450) See Fig. 41. $4.5 \div 2 = 2.25$.

$$\frac{12}{2.25} \times 6 \times 30 = 960 \text{ lb.} \quad \text{Ans.}$$

(451) (*a*) $960 \div 30 = 32$. Ans.

(*b*) $790 \div 960 = .8229 = 82.29\%$ Ans.

(452) (*a*) See Fig. 42. $475 + (475 \times .24) = 589$ lb. Ans.

(*b*) $475 \div 589 = .8064 = 80.64\%$. Ans.

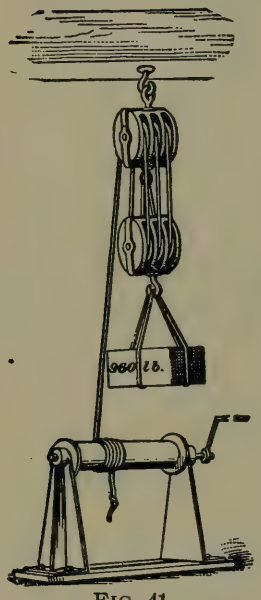

FIG. 41.

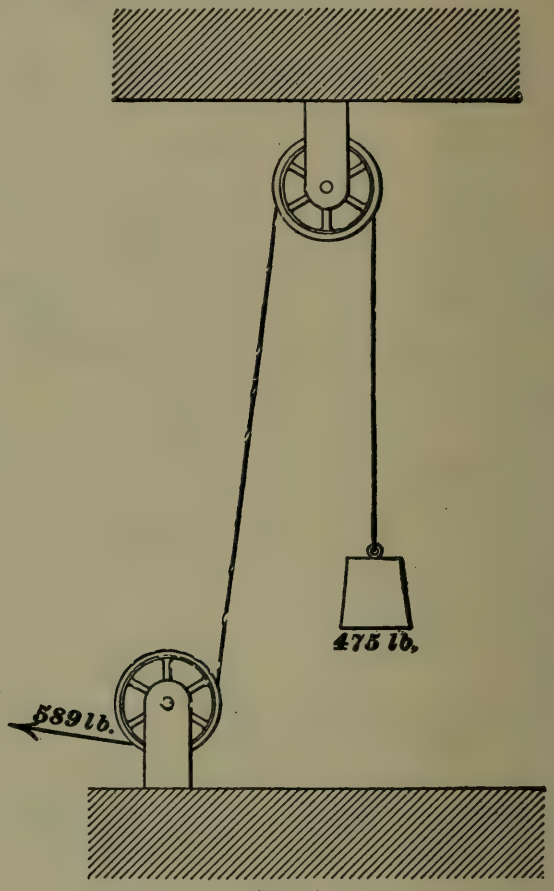

FIG. 42.

(453) (*a*) By formula **23,** $U = FS = 6 \times 25 = 150$ foot-pounds. Ans.

(*b*) $2\frac{1}{2}$ sec. $= \frac{2\frac{1}{2}}{60} = \frac{1}{24}$ min.

Using formula **24,** Power $= \frac{FS}{T} = \frac{150}{\frac{1}{24}} = 3{,}600$ ft.-lb. per min. Ans.

STRENGTH OF MATERIALS.

(QUESTIONS 689–748.)

---

(689) See Arts. **1336, 1339,** and **1338.**

(690) See Arts. **1344, 1345, 1352,** and **1354.**

(691) See Art. **1347.**

(692) Use formula **110.**

$$E = \frac{Pl}{Ae}; \text{ therefore, } e = \frac{Pl}{AE}.$$

$A = .7854 \times 2^2$; $l = 10 \times 12$; $P = 40 \times 2{,}000$; $E = 25{,}000{,}000$.

Therefore, $e = \dfrac{40 \times 2{,}000 \times 10 \times 12}{.7854 \times 4 \times 25{,}000{,}000} = .12223''$. Ans.

(693) Using formula **110,**

$$E = \frac{Pl}{Ae} = \frac{7{,}000 \times 7\frac{1}{2}}{.7854 \times (\frac{1}{2})^2 \times .009} = 29{,}708{,}853.2 \text{ lb. per sq. in.}$$

Ans.

(694) Using formula **110,**

$$E = \frac{Pl}{Ae}, \text{ or } P = \frac{AeE}{l} = \frac{1\frac{1}{2} \times 2 \times .006 \times 15{,}000{,}000}{9 \times 12} =$$

2,500 lb. Ans.

(695) By formula **110,**

$$E = \frac{Pl}{Ae}, \text{ or } l = \frac{AeE}{P} = \frac{.7854 \times 3^2 \times .05 \times 1{,}500{,}000}{2{,}000} = 265.07''.$$

Ans.

(696) Using a factor of safety of 4 (see Table 28), formula **108** becomes

For notice of copyright, see page immediately following the title page.

$$P = \frac{A\,S_1}{4}, \text{ or } A = \frac{4P}{S_1} = \frac{4 \times 6 \times 2{,}000}{55{,}000} = .8727272 \text{ sq. in.}$$

$$d = \sqrt{\frac{A}{.7854}} = \sqrt{\frac{.8727272}{.7854}} = 1.054''. \quad \text{Ans.}$$

(697) From Table 23, the weight of a piece of cast iron 1″ square and 1 ft. long is 3.125 lb.; hence, each foot of length of the bar makes a load of 3.125 lb. per sq. in. The breaking load—that is, the ultimate tensile strength—is 20,000 lb. per sq. in. Hence, the length required to break the bar is $\frac{20{,}000}{3.125} = 6{,}400$ ft. Ans.

(698) Let t = the thickness of the bolt head;

d = diameter of bolt.

Area subject to shear $= \pi\,d\,t$.

Area subjected to tension $= \frac{1}{4}\pi\,d^2$.

$S_1 = 55{,}000. \quad S_3 = 50{,}000.$

Then, in order that the bolt shall be equally strong in both tension and shear, $\pi\,d\,t\,S_3 = \frac{1}{4}\pi\,d^2\,S_1$,

$$\text{or } t = \frac{\pi\,d^2\,S_1}{4\pi\,d\,S_3} = \frac{d\,S_1}{4\,S_3} = \frac{\frac{3}{4} \times 55{,}000}{4 \times 50{,}000} = .206''. \quad \text{Ans.}$$

(699) Using a factor of safety of 15 for brick, formula **108** gives

$$P = \frac{A\,S_2}{15}.$$

$A = (2\frac{1}{2} \times 3\frac{1}{2})$ sq. ft. $= 30 \times 42 = 1{,}260$ sq. in.; $S_2 = 2{,}500$.

Therefore, $P = \frac{1{,}260 \times 2{,}500}{15} = 210{,}000$ lb. $= 105$ tons. Ans.

(700) The horizontal component of the force P is $P \cos 30° = 3.500 \times .866 = 3{,}031$ lb. The area A is $4\,a$, the ultimate shearing strength, S_3, 600 lb., and the factor of safety, 8.

Hence, from formula **108,**

$$P = \frac{A S_3}{8} = \frac{4 a S_3}{8} = \frac{a S_3}{2}. \quad a = \frac{2P}{S_3} = \frac{2 \times 3{,}031}{600} = 10.1''. \quad \text{Ans.}$$

(701) See Art. **1366.**

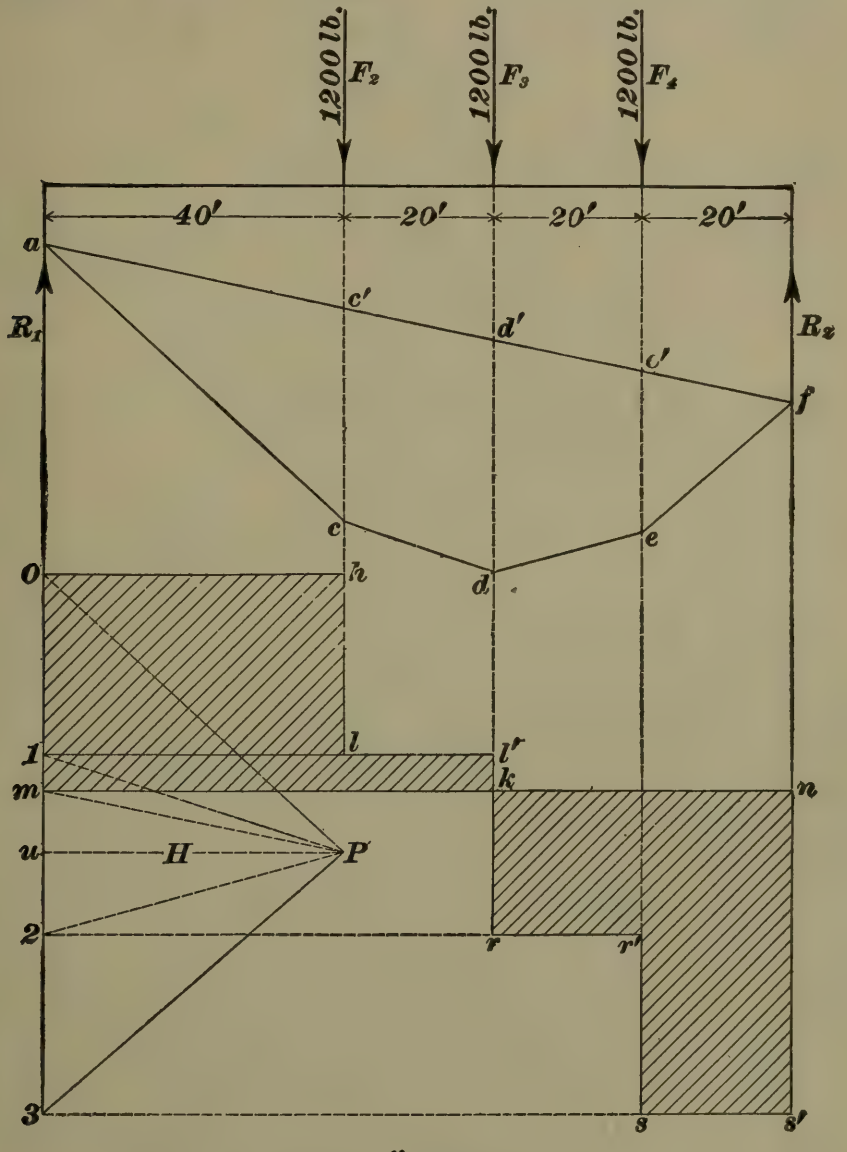

Scale of forces 1″=1600 lb.
Scale of distance 1″=32′

FIG. 58.

(702) Using formula **111,** with the factor of safety 4

$$p d = \frac{2 t S_1}{4} = \frac{t S_1}{2}, \text{ or } t = \frac{2 p d}{S_1} = \frac{2 \times 120 \times 48}{55{,}000}.$$

Since 40% of the plate is removed by the rivet holes, 60% remains, and the actual thickness required is

$$\frac{t}{.60} = \frac{2 \times 120 \times 48}{.60 \times 55{,}000} = .349''. \quad \text{Ans.}$$

(703) Using a factor of safety of 6, in formula **111,**

$$p\,d = \frac{2\,t\,S_1}{6} = \frac{t\,S_1}{3}.$$

Hence, $t = \frac{3\,p\,d}{S_1} = \frac{3 \times 6 \times 200}{20{,}000} = .18''.$ Ans.

(704) Using formula **114,** with a factor of safety of 10,

$$p = \frac{9{,}600{,}000\,t^{2.18}}{10\,l\,d} = 960{,}000\frac{t^{2.18}}{l\,d}.$$

Hence, $t = \sqrt[2.18]{\frac{p\,l\,d}{960{,}000}} = \sqrt[2.18]{\frac{130 \times 12 \times 12 \times 3}{960{,}000}} = .272''.$ Ans.

(705) From formula **113,**

$$p = \frac{S\,t}{r + t}, \text{ or } t = \frac{p\,r}{S - p} = \frac{2{,}000 \times \frac{4}{2}}{2{,}800 - 2{,}000} = \frac{4{,}000}{800} = 5''. \quad \text{Ans.}$$

(706) See Fig. 58. (*a*) Upon the load line, the loads *O*, *1*, *1-2*, and *2-3* are laid off equal, respectively, to F_2, F_3, and F_4; the pole *P* is chosen, and the rays drawn in the usual manner; the pole distance $H = 2{,}000$ lb. The equilibrium polygon is constructed by drawing *a c*, *c d*, *d e*, and *e f* parallel to *P O*, *P 1*, *P 2*, and *P 3*, respectively, and finally drawing the closing line *f a* to the starting point *a*. *P m* is drawn parallel to the latter line, dividing the load line into the reactions $m\,O = R_1$, and $3\,m = R_2$. The shear axis *m n* is drawn through *m*, and the shear diagram *O h l* .... *s' n m O* is constructed in the usual manner. To the scale of forces $m\,O = 1{,}440$ lb., and $3\,m = 2{,}160$ lb. To the scale of distances the maximum vertical intercept $y = d'\,d = 31.2$ ft., which, multiplied by H, $= 31.2 \times 2{,}000 =$ **62,400 ft.-lb.** $= 748{,}800$ in.-lb. Ans.

(*b*) The shear at a point 30 ft. from the left support $= O\,m =$ **1,440 lb.** Ans.

(*c*) The maximum shear $= n\,s' =$ **— 2,160 lb.** Ans.

(707) See Fig. 59. Draw the force polygon *O 1 2 3 4 5 O* in the usual manner, *O 1* being equal to and parallel to F_1, *1-2* equal to and parallel to F_2, etc. *O 5* is the resultant.

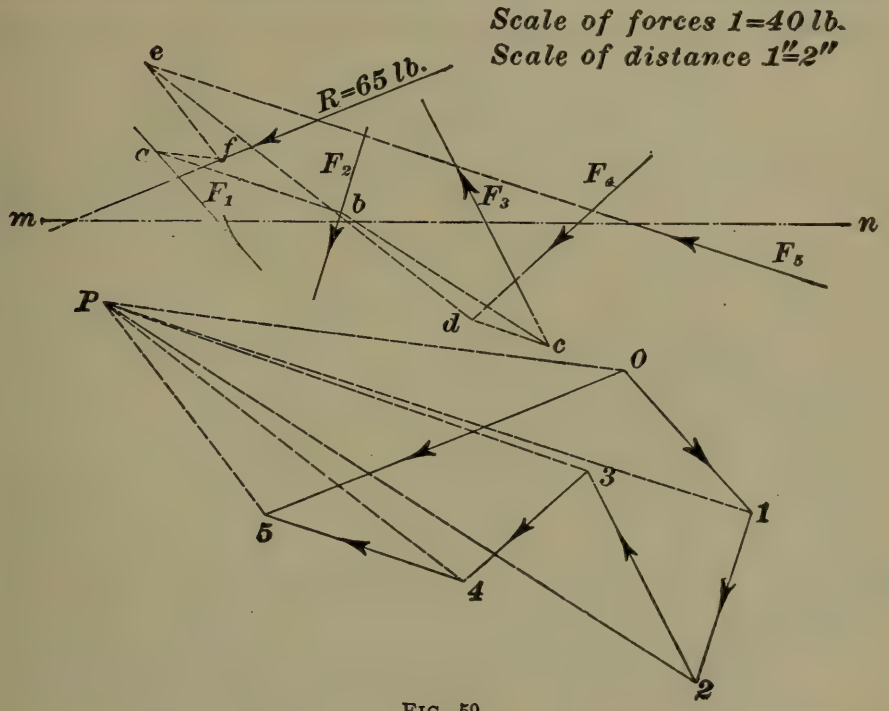

FIG. 59.

Choose the pole *P*, and draw the rays *P O*, *P 1*, *P 2*, etc. Choose any point, *a* on F_1, and draw through it a line parallel to the ray *P 1*. From the intersection *b* of this line with F_2, draw a line parallel to *P 2*; from the intersection *c* of the latter line with F_3 produced draw a parallel to *P 3*, intersecting F_4 produced in *d*. Finally, through *d*, draw a line parallel to *P 4*, intersecting F_5 produced in *e*. Now, through *a* draw a line parallel to *P O*, and through *e* a line parallel to *P 5*; their intersection *f* is a point on the resultant. Through *f* draw the resultant *R* parallel to *O 5*. It will be found by measurement that $R = 65$ lb., that it makes an angle of $22\frac{1}{2}°$ with *m n*, and intersects it at a distance of $1\frac{1}{4}''$ from the point of intersection of F_1 and *m n*.

(708) See Fig. 60. The construction is entirely similar to those given in the text. *O 1*, *1-2*, and *2-3* are laid off to represent F_1, F_2, and F_3; the pole *P* is chosen, and the rays

drawn. Parallel to the rays are drawn the lines of the equilibrium polygon *a b c d g a*. The closing line *g a* is found to be parallel to *P 1*. Consequently, *O 1* is the left reaction and *1-3* the right reaction, the former being 6 tons

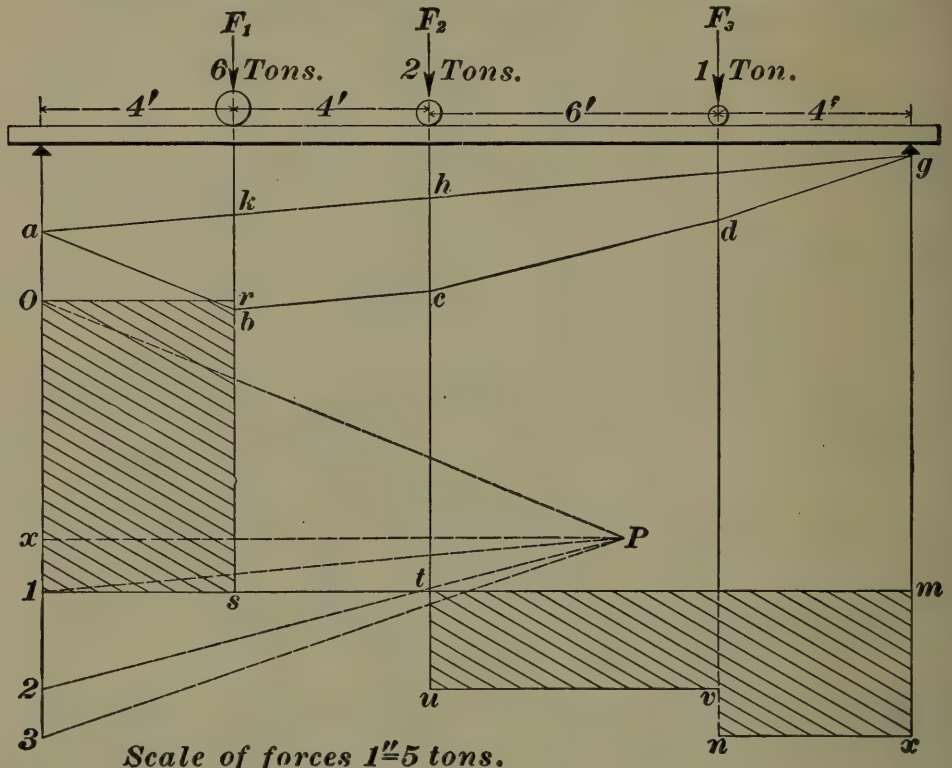

FIG. 60.

and the latter 3 tons. The shear diagram is drawn in the usual manner; it has the peculiarity of being zero between F_1 and F_2.

(709) The maximum moment occurs when the shear line crosses the shear axis. In the present case the shear line and shear axis coincide with *s t*, between F_1 and F_2; hence, the bending moment is the same (and maximum) at F_1 and F_2, and at all points between. This is seen to be true from the diagram, since *k h* and *b c* are parallel. Ans.

(*b*) By measurement, the moment is found to be $24 \times 12 = 288$ inch-tons. Ans.

(*c*) $288 \times 2{,}000 = 576{,}000$ inch-pounds. **Ans.**

(710) See Arts. **1375** to **1379.**

(711) See Fig. 61. The force polygon *O 1 2 3 4 O* is drawn as in Fig. 59, *O 4* being the resultant. The equilibrium polygon *a b c d g a* is then drawn, the point *g* lying on the resultant. The resultant *R* is drawn through *g*, parallel to and equal to *O 4*. A line is drawn through *C*, parallel to *R*. Through *g* the lines *g e* and *g f* are drawn parallel, respectively, to *P O* and *P 4*, and intersecting the parallel to *R*, through *C* in *e* and *f*; then, *e f* is the intercept, and *P u*, perpendicular to *O 4*, is the pole distance. *P u* = 33 lb.; *e f* = 1.32″. Hence, the resultant moment is 33 × 1.32 = 43.6 in.-lb. Ans.

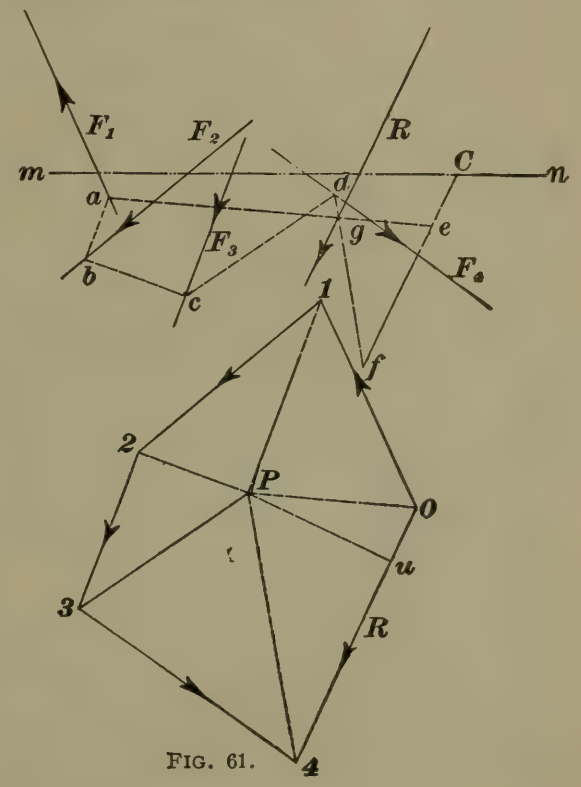

FIG. 61.

(712) The maximum bending moment, $M = W\frac{l_1 l_2}{l}$ (see Fig. 6 of table of Bending Moments) $= 4 \times 2{,}000 \times \frac{14 \times 8}{22} = 40{,}727\frac{3}{11}$ ft.-lb. = 488,727 in.-lb. Then, according to formula **117,**

$$\frac{S_4 I}{f c} = 488{,}727.$$

$$\frac{I}{c} = \frac{488{,}727 f}{S_4} = \frac{488{,}727 \times 8}{9{,}000} = 434.424.$$

But, $\frac{I}{c} = \frac{\frac{1}{12} b d^3}{\frac{1}{2} d} = \frac{1}{6} b d^2$, and, according to the conditions of the problem, $b = \frac{1}{2} d$.

Therefore, $\frac{I}{c} = \frac{1}{6} b d^2 = \frac{1}{12} d^3 = 434.424.$

$$d^3 = 5{,}213.088.$$

$$\left.\begin{aligned} d &= 17\tfrac{1}{3}''. \\ b &= 8\tfrac{2}{3}''. \end{aligned}\right\} \text{Ans.}$$

(713) The beam, with the moment and shear diagrams, is shown in Fig. 62. On the line, through the left reaction,

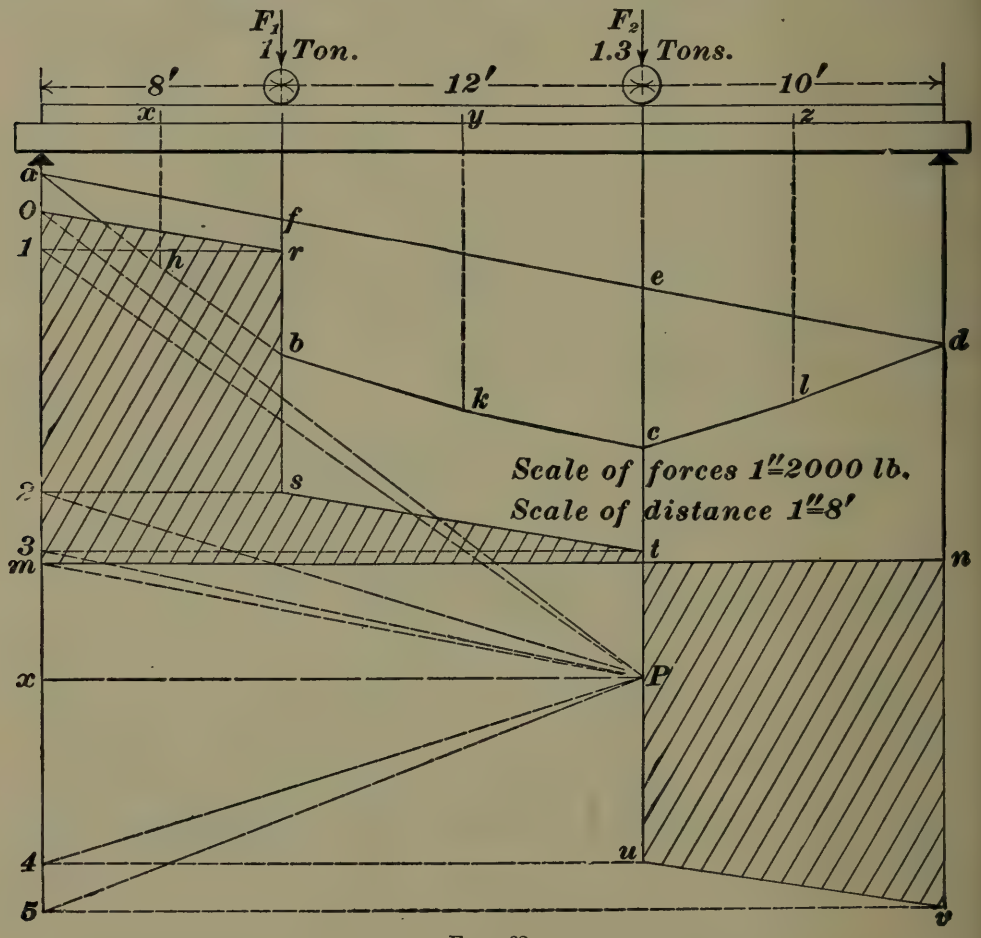

FIG. 62.

are laid off the loads in order. Thus, $O\,1 = 40 \times 8 = 320$ lb., is the uniform load between the left support and F_1; *1-2* is

$F_1 = 2{,}000$ lb.; *2-3* $= 40 \times 12 = 480$ lb., is the uniform load between F_1 and F_2; *3-4* $= 2{,}000 \times 1.3 = 2{,}600$ lb., is F_2, and *4-5* $= 40 \times 10 = 400$ lb., is the uniform load between F_2 and the right support. The pole P is chosen and the rays drawn. Since the uniform load is very small compared with F_1 and F_2, it will be sufficiently accurate to consider the three portions of it concentrated at their respective centers of gravity x, y, and z. Drawing the equilibrium polygon parallel to the rays, we obtain the moment diagram $a\ h\ b\ k\ c\ l\ d\ a$. From P, drawing $P\,m$ parallel to the closing line $a\,d$, we obtain the reactions $O\,m$ and $m\,5$, equal, respectively, to 2,930 and 2,870 lb. Ans. The shear axis $m\,x$, and the shear diagram $O\ r\ s\ t\ u\ v\ n\ m$, are drawn in the usual manner. The greatest shear is $O\,m$, 2,930 lb. The shear line cuts the shear axis under F_2. Hence, the maximum moment is under F_2. By measurement, $e\,c$ is 64″, and $P\,x$ is 5,000 lb.; hence, the maximum bending moment is $64 \times 5{,}000 = 320{,}000$ in.-lb. Ans.

(714) From the table of Bending Moments, the greatest bending moment of such a beam is $\frac{w\,l^2}{8}$, or, in this case, $\frac{w \times 240^2}{8}$.

By formula **117**,

$$M = \frac{w \times 240^2}{8} = \frac{S_4 I}{f\,c} = \frac{45{,}000}{4} \times \frac{280}{12 \div 2}.$$

Therefore, $w = \frac{45{,}000 \times 280 \times 8}{240 \times 240 \times 4 \times 6} = 72.92$ lb. per inch of length $= 72.92 \times 12 = 875$ lb. per foot of length. Ans.

(715) From the table of Bending Moments, the maximum bending moment is

$$\frac{W\,l}{4} = \frac{W \times 96}{4} = 24\,W.$$

From formula **117**,

$$M = 24\,W = \frac{S_4 I}{f\,c}.$$

$I = \frac{\pi}{64}(d^4 - d_1^4) = 56.945$; $c = \frac{1}{2}\,d = \frac{6\frac{1}{2}}{2} = 3\frac{1}{4}$; $S_4 = 38{,}000$; $f = 6$

Hence, $24\,W = \dfrac{38{,}000 \times 56.945}{6 \times 3.25}$.

$$W = \frac{38{,}000 \times 56.945}{24 \times 6 \times 3.25} = 4{,}624 \text{ lb.} \quad \text{Ans}$$

(716) (*a*) From the table of Bending Moments,

$$M = \frac{w\,l^2}{8} = \frac{w \times 192^2}{8}.$$

From formula **117,**

$$M = \frac{w \times 192^2}{8} = \frac{S_4 I}{f c}.$$

$S_4 = 7{,}200$; $f = 8$; $I = \dfrac{1}{12} b\,d^3 = \dfrac{2{,}000}{12}$; $c = \dfrac{1}{2} d = 5$.

Then, $\dfrac{w \times 192^2}{8} = \dfrac{7{,}200}{8} \times \dfrac{2{,}000}{12 \times 5}$.

$$w = \frac{7{,}200 \times 2{,}000 \times 8}{8 \times 12 \times 5 \times 192 \times 192} =$$

6.51 lb. per in. $= 6.51 \times 12 = 78.12$ lb. per ft. **Ans.**

(*b*) $I = \dfrac{1}{12} b\,d^3 = \dfrac{10 \times 2^3}{12} = \dfrac{80}{12}$. $c = 1''$.

$$\frac{w \times 192^2}{8} = \frac{7{,}200}{8} \times \frac{80}{12 \times 1}.$$

$$w = \frac{7{,}200 \times 80 \times 8}{8 \times 12 \times 192 \times 192} = 1.3 \text{ lb. per in.}$$

$= 1.3 \times 12 = 15.6$ lb. per ft. Ans.

(717) (*a*) From the table of Bending Moments, the deflection of a beam uniformly loaded is $\dfrac{5}{384} \dfrac{W l^3}{E I}$. In example 714, $W = 875 \times 20 = 17{,}500$ lb.; $l = 240''$, $E = 25{,}000{,}000$, and $I = 280$.

Hence, deflection $s = \dfrac{5 \times 17{,}500 \times 240^3}{384 \times 25{,}000{,}000 \times 280} = .45$ in. Ans.

(*b*) From the table of Bending Moments, $s = \dfrac{1}{48} \dfrac{W l^3}{E I}$.

In example 715, $W = 4{,}624$ lb.; $l = 96$ in.; $E = 15{,}000{,}000$, and $I = 56.945$.

Hence, $s = \dfrac{4{,}624 \times 96^3}{48 \times 15{,}000{,}000 \times 56.945} = .1''$, nearly. Ans.

(*c*) $s = \dfrac{5}{384}\dfrac{Wl^3}{EI}$. In example 716 (*a*), $W = 78.12 \times 16$; $l = 192$; $E = 1{,}500{,}000$, and $I = \dfrac{2{,}000}{12}$.

Hence, $s = \dfrac{5 \times 78.12 \times 16 \times 192^3}{384 \times 1{,}500{,}000 \times \frac{2000}{12}} = .461''$. Ans.

(718) Area of piston $= \dfrac{1}{4}\pi d^2 = \dfrac{1}{4}\pi \times 14^2$.

$W =$ pressure on piston $= \dfrac{1}{4}\pi \times 14^2 \times 80$.

From the table of Bending Moments, the maximum bending moment for a cantilever uniformly loaded is

$\dfrac{wl^2}{2} = \dfrac{Wl}{2} = \dfrac{\frac{1}{4}\pi \times 14^2 \times 80 \times 4}{2} = \dfrac{S_4}{f}\dfrac{I}{c}$. (See formula **117.**)

$\dfrac{S_4}{f} = \dfrac{45{,}000}{10} = 4{,}500. \quad \dfrac{I}{c} = \dfrac{\frac{1}{64}\pi d^4}{\frac{1}{2}d} = \dfrac{1}{32}\pi d^3.$

Hence, $\dfrac{\frac{1}{4}\pi \times 14^2 \times 80 \times 4}{2} = \dfrac{4{,}500\,\pi d^3}{32}$,

or $d^3 = \dfrac{14^2 \times 80 \times 4 \times 32}{4 \times 2 \times 4{,}500} = 55.75.$

$d = \sqrt[3]{55.75} = 3.82''$. Ans.

(719) Substituting in formula **119,** $S_2 = 90{,}000$; $A = 6^2 \times .7854$; $f = 6$; $l = 14 \times 12 = 168$; $g = 5{,}000$; $I = \dfrac{\pi}{64} \times 6^4$, we obtain

$$W = \frac{S_2 A}{f\left(1 + \frac{A l^2}{g I}\right)} = \frac{90{,}000 \times 6^2 \times .7854}{6\left(1 + \frac{6^2 \times .7854 \times 168^2}{5{,}000 \times \frac{3.1416 \times 6^4}{64}}\right)} = 120{,}872 \text{ lb.}$$ Ans.

(720) For timber, $S_2 = 8{,}000$ and $f = 8$; hence, $\dfrac{S_2}{f} = \dfrac{8{,}000}{8} = 1{,}000$.

Substituting in formula **108,**

$$P = A\frac{S_2}{f} = 1{,}000\,A.$$

$A = \frac{P}{1{,}000} = \frac{7 \times 2{,}000}{1{,}000} = 14$ sq. in., necessary area of a *short* column to support the given load. Since the column is quite long, assume it to be 6″ square. Then, $A = 36$, and $I = \frac{1}{12}b^4 = \frac{6^4}{12} = 108$.

Formula **119** gives

$$W = \frac{S_2 A}{f\left(1 + \frac{A\,l^2}{g\,I}\right)}, \text{ or } \frac{S_2}{f} = \frac{W}{A}\left(1 + \frac{A\,l^2}{g\,I}\right).$$

$$l = 30 \times 12 = 360, \text{ and } g = 3{,}000.$$

$$\frac{S_2}{f} = \frac{14{,}000}{36}\left(1 + \frac{36 \times 360^2}{3{,}000 \times 108}\right) = 5{,}990, \text{ nearly.}$$

Since this value is much too large, the column must be made larger. Trying 9″ square, $A = 81$, $I = 546\frac{3}{4}$.

Then, $\frac{S_2}{f} = \frac{14{,}000}{81}\left(1 + \frac{81 \times 360 \times 360}{3{,}000 \times 546\frac{3}{4}}\right) = 1{,}279.$

This value of $\frac{S_2}{f}$ is much nearer the required value, 1,000.

Trying 10″ square, $A = 100$, $I = \frac{10{,}000}{12} = 833\frac{1}{3}$.

$$\frac{S_2}{f} = \frac{14{,}000}{100}\left(1 + \frac{100 \times 360 \times 360}{3{,}000 \times 833\frac{1}{3}}\right) = 866, \text{ nearly.}$$

Since this value of $\frac{S_2}{f}$ is less than 1,000, the column is a little too large; hence, it is between 9 and 10 inches square. $9\frac{5}{8}$″ will give 997.4 lb. as the value of $\frac{S_2}{f}$; hence, the column should be $9\frac{5}{8}$″ square.

This problem may be more readily solved by formula **120,** which gives

$$c = \sqrt{\frac{7 \times 2000 \times 8}{2 \times 800} + \sqrt{\frac{7 \times 2000 \times 8}{8000}\left(\frac{7 \times 2000 \times 8}{4 \times 8000} + \frac{12 \times 360^2}{3000}\right)}} =$$

$$\sqrt{7 + \sqrt{14\,(3.5 + 518.4)}} = \sqrt{92.479} = 9.61'' = 9\tfrac{5}{8}'', \text{ nearly.}$$

(721) Here $W = 21{,}000$; $f = 10$; $S_2 = 150{,}000$; $g = 6{,}250$; $l = 7.5 \times 12 = 90''$. For using formula **121**, we have

$$\frac{.3183\ Wf}{S_2} = \frac{.3183 \times 21{,}000 \times 10}{150{,}000} = .4456.$$

$$\frac{16\,l^2}{g} = \frac{16 \times 8100}{6250} = 20.7360.$$

Therefore,

$$d = 1.4142\sqrt{.4456 + \sqrt{.4456\,(.4456 + 20.7360)}} =$$
$$1.4142\sqrt{.4456 + 3.0722} = 2.65'', \text{ or say } 2\tfrac{5}{8}''.$$

(722) For this case, $A = 3.1416$ sq. in.; $l = 4 \times 12 = 48''$; $S_2 = 55{,}000$; $f = 10$; $I = .7854$; $g = 20{,}250$.

Substituting these values in formula **119**,

$$W = \frac{S_2 A}{f\left(1 + \frac{A\,l^2}{g\,I}\right)} = \frac{55{,}000 \times 3.1416}{10\left(1 + \frac{3.1416 \times 48^2}{20{,}250 \times .7854}\right)} =$$
$$\frac{5{,}500 \times 3.1416}{1.4551}.$$

Steam pressure = 60 lb. per sq. in.

Then, area of piston $= .7854\ d^2 = \frac{W}{60} = \frac{5{,}500 \times 3.1416}{1.4551 \times 60}$.

Hence, $d^2 = \frac{5{,}500 \times 3.1416}{.7854 \times 1.4551 \times 60} = 252$, nearly,

and $d = \sqrt{252} = 15\frac{7}{8}''$, nearly. Ans.

(723) (*a*) The strength of a beam varies directly as the width and square of the depth and inversely as the length.

Hence, the ratio between the loads is

$$\frac{6 \times 8^2}{10} : \frac{4 \times 12^2}{16} = 16 : 15, \text{ or } 1\tfrac{1}{15}. \quad \text{Ans.}$$

(*b*) The deflections vary directly as the cube of the lengths, and inversely as the breadths and cubes of the depths.

Hence, the ratio between the deflections is

$$\frac{10^3}{6 \times 8^3} : \frac{16^3}{4 \times 12^3} = .549. \quad \text{Ans.}$$

(724) Substituting the value of c_1, from Table 31, in formula **123,** we obtain

$$(a)\quad d = c_1\sqrt[4]{\frac{H}{N}} = 4.92\sqrt[4]{\frac{40}{120}} = 3.739''.\quad \text{Ans.}$$

$$(b)\quad d = c_1\sqrt[4]{\frac{H}{N}} = 4.92\sqrt[4]{\frac{80}{100}} = 4.65''.\quad \text{Ans.}$$

(725) Using formula **123,**

$$d = 4.7\sqrt[4]{\frac{4{,}000}{50}} = 14.06''.$$

Since this result is greater than 13.6″, formula **124** must be used, in which

$$d = k_1\sqrt[3]{\frac{H}{N}} = 3.3\sqrt[3]{\frac{4{,}000}{50}} = 14.22''.\quad \text{Ans.}$$

(726) From formula **123,**

$$d = c_1\sqrt[4]{\frac{H}{N}},\ \text{or}\ H = \frac{d^4N}{c_1^4}.\quad c_1 = 4.11.\quad \text{(Table 31.)}$$

$$\text{Hence,}\ H = \frac{4^4 \times 80}{4.11^4} = 71.775\ \text{H.P.}\quad \text{Ans.}$$

(727) Using formula **126,**

$$H = q_1N\left(\frac{d_1^4 - d_2^4}{d_1}\right) = .0212 \times 100\left(\frac{(7\tfrac{1}{2})^4 - 5^4}{7\tfrac{1}{2}}\right) = 717.7\ \text{H.P.}\quad \text{Ans.}$$

(.0212 is the value of q_1 from Table 32.)

(728) (*a*) Using formula **127,**

$$(P = 100\,C^2 = 100 \times 8^2 = 6{,}400\ \text{lb.}\quad \text{Ans.}$$

(*b*) Using formula **128,**

$$P = 600\,C^2,\ \text{or}\ C^2 = \frac{P}{600} = \frac{6{,}000}{600} = 10.$$

$$C = \sqrt{10} = 3.162''.$$

$$d = \frac{1}{3}C = 1.054''.\quad \text{Ans.}$$

(*c*) Using formula **129,**

$$P = 1{,}000\,C^2;\ C^2 = \frac{P}{1{,}000} = \frac{6\tfrac{2}{3} \times 2{,}000}{1{,}000} = 13\tfrac{1}{3}.$$

$$C = \sqrt{13\tfrac{1}{3}} = 3.651''.\quad \text{Ans.}$$

(729) (*a*) Using formula **130,**

$$P = 12{,}000\,d^2 = 12{,}000 \times \left(\frac{7}{8}\right)^2 = 9{,}187.5 \text{ lb.} \quad \text{Ans.}$$

(*b*) Formula **131** gives $P = 18{,}000\,d^2$.

Therefore, $d = \sqrt{\dfrac{P}{18{,}000}} = \sqrt{\dfrac{8{,}000}{18{,}000}} = \sqrt{\dfrac{4}{9}} = .667''$. Ans.

(730) The deflection is by formula **118,**

$s = a\dfrac{Wl^3}{EI} = \dfrac{1}{192}\dfrac{Wl^3}{EI}$, the coefficient being found from the table of Bending Moments.

Transposing, $W = \dfrac{192\,s\,E\,I}{l^3}$; $l = 120$; $E = 30{,}000{,}000$; $I = .7854$; $s = \dfrac{1}{8}$.

Then, $W = \dfrac{192 \times 30{,}000{,}000 \times .7854}{8 \times 120^3} = 327.25$ lb. Ans.

(731) (*a*) The maximum bending moment is, according to the table of Bending Moments, $\dfrac{Wl}{4} = \dfrac{6{,}000 \times 60}{4} =$ 90,000 inch-pounds.

By formula **117,**

$$M = 90{,}000 = \frac{S_t}{f}\frac{I}{c}.$$

$S_t = 120{,}000$; $f = 10$. $\quad \dfrac{I}{c} = \dfrac{\frac{\pi d^4}{64}}{\frac{1}{2}d} = \dfrac{\pi d^3}{32}$.

$$\text{Hence, } 90{,}000 = \frac{120{,}000}{10}\,\frac{\pi d^3}{32},$$

$$\text{or } d = \sqrt[3]{\frac{90{,}000 \times 10 \times 32}{120{,}000 \times 3.1416}} = 4.244'' = 4\tfrac{1}{4}'', \text{ nearly.}$$

(*b*) Using formula **123,**

$$d = c_1\sqrt[4]{\frac{H}{N}} = 4.7\sqrt[4]{\frac{75}{80}} = 4\tfrac{5}{8}'', \text{ nearly.} \quad \text{Ans.}$$

(732) (*a*) The graphic solution is shown in Fig. 63. On the vertical through the support *O 1* is laid off equal to the uniform load between the support and F_1: *1-2* is laid off

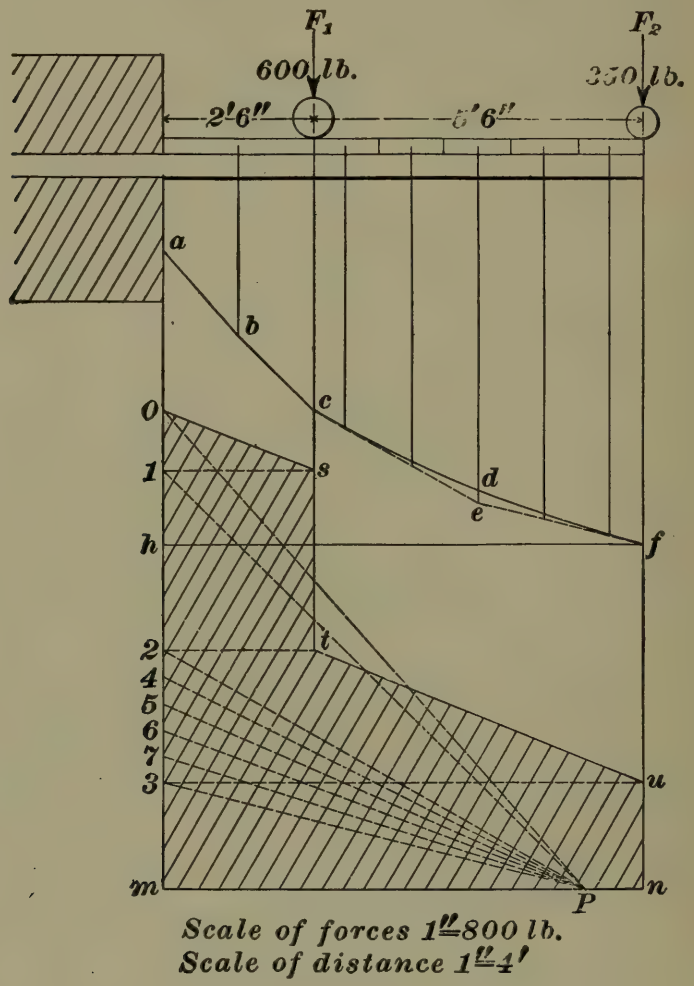

FIG. 63.

to represent F_1. *2-3* represents to the same scale the remainder of the uniform load, and *3 m* represents F_2. The pole *P* is chosen and the rays drawn. The polygon *a b c e f h* is then drawn, the sides being parallel, respectively, to the corresponding rays. If the uniform load between F_1 and F_2 be considered as concentrated at its center of gravity, the polygon will follow the broken line *c e f*. It will be better in this case to divide the uniform load into several parts, *2-4*, *4-5*, *5-6*, etc., thus obtaining the line of the polygon

c d f. To draw the shear diagram, project the point *1* across the vertical through F_1, and draw $O\,s$. Next project the point *2* across to *t*, and *3* across to *u*, and draw $t\,u$. $O\,s\,t\,u\,n\,m$ is the shear diagram. The maximum moment is seen to be at the support, and is equal to $a\,h \times P\,m$. To the scale of distances, $a\,h = 58.8$ in., while $P\,m = H =$ 1,400 lb. to the scale of forces. Hence, the maximum bending moment is $58.8 \times 1{,}400 = 82{,}320$ in.-lb. Ans.

(*b*) From formula **117,**

$$M = \frac{S_4}{f}\frac{I}{c} = 82{,}320. \quad S_4 = 12{,}500;\ f = 8.$$

$$\text{Therefore, } \frac{I}{c} = \frac{82{,}320 \times 8}{12{,}500} = 52.68.$$

$$\text{But, } \frac{I}{c} = \frac{\frac{1}{12}\,b\,d^3}{\frac{1}{2}\,d} = \frac{b\,d^2}{6}. \text{ and } d = 2\tfrac{1}{2}\,b, \text{ or } b = \frac{2\,d}{5}.$$

$$\text{Hence, } \frac{I}{c} = \frac{b\,d^2}{6} = \frac{d^3}{15} = 52.68. \quad d^3 = 52.68 \times 15 = 790.2.$$

$$d = \sqrt[3]{790.2} = 9.245''. \quad b = \frac{2\,d}{5} = 3.7'', \text{ nearly.} \quad \text{Ans.}$$

(733) Referring to the table of Moments of Inertia,

$$I = \frac{(b\,d^2 - b_1\,d_1^2)^2 - 4\,b\,d\,b_1\,d_1(d - d_1)^2}{12\,(b\,d - b_1\,d_1)} =$$

$$\frac{[8 \times 10^2 - 6 \times (8\frac{1}{2})^2]^2 - 4 \times 8 \times 10 \times 6 \times 8\frac{1}{2}\,(10 - 8\frac{1}{2})^2}{12\,(8 \times 10 - 6 \times 8\frac{1}{2})} =$$

$$280.466.$$

$$c = \frac{d}{2} + \frac{b_1\,d_1}{2}\left(\frac{d - d_1}{b\,d - b_1\,d_1}\right) =$$

$$\frac{10}{2} + \frac{6 \times 8\frac{1}{2}}{2}\left(\frac{10 - 8\frac{1}{2}}{8 \times 10 - 6 \times 8\frac{1}{2}}\right) = 6.319.$$

(*a*) From the table of Bending Moments, the maximum bending moment is $\frac{W\,l}{4}$.

$$S_4 = 120{,}000;\ f = 7;\ l = 35 \times 12 = 420 \text{ in.}$$

Using formula **117,** $M = \frac{W\,l}{4} = \frac{S_4\,I}{f\,c}$, or

$$W = \frac{4\,S_4\,I}{l\,f\,c} = \frac{4 \times 120{,}000 \times 280.466}{420 \times 7 \times 6.319} = 7{,}246 \text{ lb.} \quad \text{Ans.}$$

(*b*) In this case $f = 5$, and the maximum bending moment is $\frac{w\,l^2}{8}$. Hence, from formula **117,**

$$M = \frac{w\,l^2}{8} = \frac{S_4\,I}{f\,c}, \text{ or } w = \frac{8\,S_4\,I}{l^2\,f\,c}.$$

Therefore, $W = w\,l = \frac{8\,S_4\,I}{l\,f\,c} = \frac{8 \times 120{,}000 \times 280.466}{420 \times 5 \times 6.319} =$ 20,290 lb. Ans.

(734) (*a*) According to formula **115,**

$$I = A\,r^2, \text{ or } r = \sqrt{\frac{I}{A}} = \sqrt{\frac{72}{24}} = \sqrt{3} = 1.732. \text{ Ans.}$$

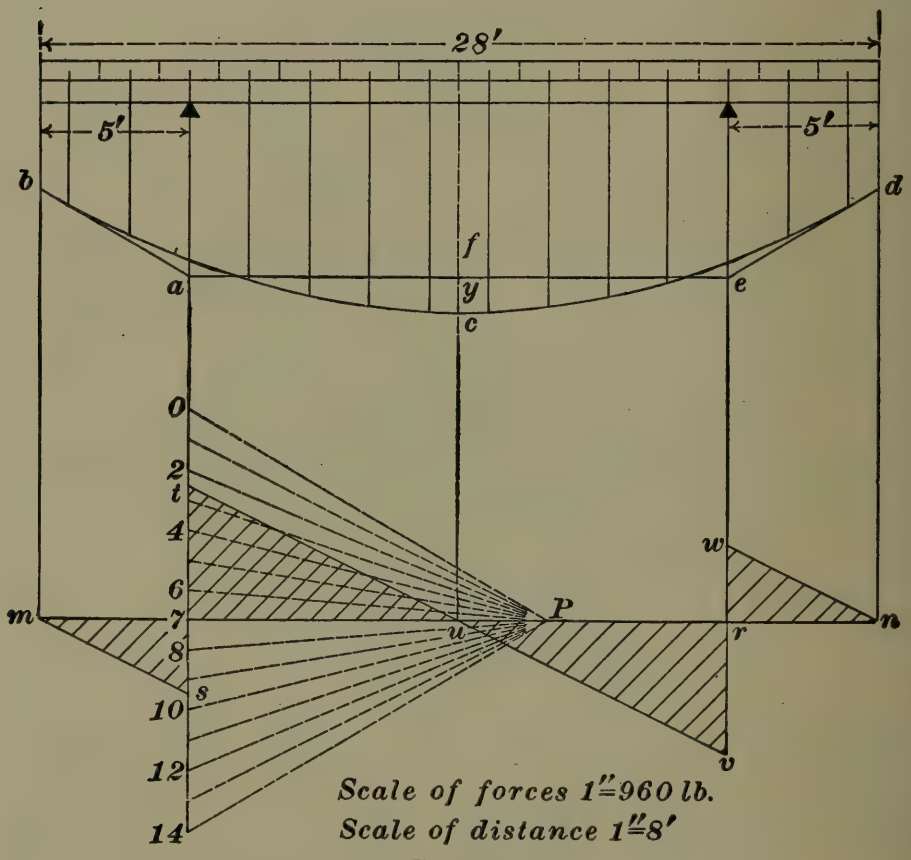

FIG. 64.

(*b*) From the table of Moments of Inertia, $I = \frac{1}{12}\,b\,d^3 =$ 72; $A = b\,d = 24$. Dividing, $\frac{\frac{1}{12}\,b\,d^3}{b\,d} = \frac{72}{24}$, or $\frac{1}{12}d^2 = 3$. $d^2 =$ 36; $d = 6''$ and $b = 4''$. Ans.

(*c*) As above, $r = \sqrt{\frac{I}{A}} = \sqrt{\frac{\frac{\pi d^4}{64}}{\frac{\pi d^2}{4}}} = \sqrt{\frac{d^2}{16}} = \frac{d}{4}$. Ans.

(735) Using formula **112**, $p\,d = 4\,t\,S$, we have $t = \frac{p\,d}{4\,S}$. Using a factor of safety of 6,

$$p\,d = \frac{4\,t\,S}{6}, \text{ or } t = \frac{6\,p\,d}{4\,S} = \frac{6 \times 100 \times 8}{4 \times 20{,}000} = .06'' \quad \text{Ans.}$$

(736) The graphic solution is shown in Fig. 64. The uniform load is divided into 14 equal parts, and lines drawn through the center of gravity of each part. These loads are laid off on the line through the left reaction, the pole P chosen, and the rays drawn. The polygon $b\,c\,d\,e\,f\,a$ is then drawn in the usual manner. The shear diagram is drawn as shown. The maximum shear is either $t\,7$ or $r\,v = 540$ lb. The maximum moment is shown by the polygon to be at $f\,c$ vertically above the point u, where the shear line crosses the shear axis. The pole distance $P\,7$ is 1,440 lb. to the scale of forces, and the intercept $f\,c$ is 14 inches to the scale of distances. Hence, the bending moment is 20,160 in.-lb.

(737) From formula **117**,

$$M = \frac{S_t}{f}\frac{I}{c} = 20{,}160. \quad S_t = 9{,}000;\ f = 8.$$

$$\text{Then, } \frac{I}{c} = \frac{20{,}160 \times 8}{9{,}000} = 17.92.$$

$$\text{But, } \frac{I}{c} = \frac{\frac{1}{12}\,b\,d^3}{\frac{1}{2}\,d} = \frac{1}{6}\,b\,d^2 \text{ for a rectangle.}$$

$$\text{Hence, } \frac{1}{6}\,b\,d^2 = 17.92, \text{ or } b\,d^2 = 107.52.$$

Any number of beams will fulfil this condition.

$$\text{Assuming } d = 6'',\ b = \frac{107.52}{36} = 3'', \text{ nearly.}$$

$$\text{Assuming } d = 5'',\ b = \frac{107.52}{25} = 4.3''.$$

(738) Using the factor of safety 10, in formula **114**,

$$p = \frac{9{,}600{,}000}{10}\,\frac{t^{2.18}}{l\,d} = \frac{960{,}000 \times .2^{2.18}}{108 \times 2.5} = 106.43 \text{ lb.} \quad \text{Ans.}$$

(739) Using formula **130,**

$$P = 12{,}000\, d^2, \text{ or } d = \sqrt{\frac{P}{12{,}000}} = \sqrt{\frac{5 \times 2{,}000}{12{,}000}} = .913''. \text{ Ans.}$$

(740) The radius r of the gear-wheel is 24″. Using formula **123,** $d = c\sqrt[4]{Pr} = .297\ \sqrt[4]{350 \times 24} = 2.84''$. Ans.

(741) Area of cylinder $= .7854 \times 12^2 = 113.1$ sq. in.
Total pressure on the head $= 113.1 \times 90 = 10{,}179$ lb.

$$\text{Pressures on each bolt} = \frac{10{,}179}{10} = 1{,}017.9 \text{ lb.}$$

Using formula **108,**

$$P = A\,S, \text{ or } A = \frac{P}{S} = \frac{1{,}017.9}{2{,}000} = .5089 \text{ sq. in., area of bolt.}$$

$$\text{Diameter of bolt} = \sqrt{\frac{.5089}{.7854}} = .8'', \text{ nearly.} \quad \text{Ans.}$$

(742) (*a*) The graphic solution is clearly shown in Fig. 65. On the vertical through F_1, the equal loads F_1 and F_2

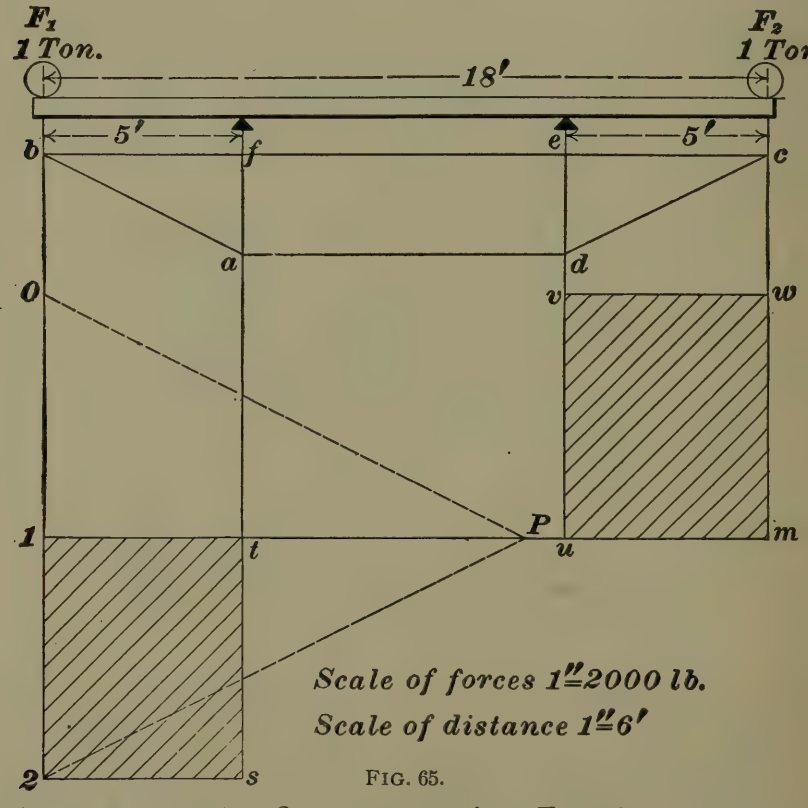

FIG. 65.

are laid off to scale, *O 1* representing F_1 and *1-2* representing

F_2. Choose the pole P, and draw the rays $P\,O$, $P\,1$, $P\,2$. Draw $a\,b$ between the left support and F_1 parallel to $P\,O$; $b\,c$ between F_1 and F_2 parallel to $P\,1$, and $c\,d$ parallel to $P\,2$, between F_2 and the right support. Through P draw a line parallel to the closing line $a\,d$. $O\,1 = 1\text{-}2$; hence, the reactions of the supports are equal, and are each equal to 1 ton. The shear between the left reaction and F_1 is negative, and equal to $F_1 = 1$ ton. Between the left and the right support it is 0, and between the latter and F_2 it is positive and equal to 1 ton. The bending moment is constant and a maximum between the supports. To the scale of forces $P\,1 = 2$ tons $= 4{,}000$ lb., and to the scale of distances $a\,f = 30$ in. Hence, the maximum bending is $4{,}000 \times 30 = 120{,}000$ in.-lb. Ans.

(*b*) Using formula **117**,

$$M = \frac{S_4}{f}\frac{I}{c} = 120{,}000. \quad S_4 = 38{,}000;\ f = 6.$$

$$\text{Then, } \frac{I}{c} = \frac{120{,}000 \times 6}{38{,}000} = \frac{360}{19} = 19, \text{ nearly.}$$

$$\text{But, } \frac{I}{c} = \frac{\frac{\pi d^4}{64}}{\frac{d}{2}} = \frac{\pi d^3}{32}.$$

$$\text{Hence, } \frac{\pi d^3}{32} = 19, \text{ or } d^3 = \frac{32 \times 19}{3.1416}.$$

$$d = \sqrt[3]{\frac{32 \times 19}{3.1416}} = 5.784''. \quad \text{Ans.}$$

(743) Since the deflections are directly as the cubes of the lengths, and inversely as the breadths and the cubes of the depths, their ratio in this case is

$$\frac{18^3}{2 \times 6^3} : \frac{12^3}{3 \times 8^3}, \text{ or } \frac{27}{2} : \frac{9}{8} = 12.$$

That is, the first beam deflects 12 times as much as the second. Hence, the required deflection of the second beam is $3 \div 12 = .025''$. Ans.

(744) The key has a shearing stress exerted on two sections; hence, each section must withstand a stress of $\frac{20,000}{2} = 10,000$ pounds.

Using formula **108,** with a factor of safety of 10,

$$P = \frac{A S_s}{10}, \text{ or } A = \frac{10 P}{S_s} = \frac{10 \times 10,000}{50,000} = 2 \text{ sq. in.}$$

Let b = width of key;

t = thickness.

Then, $b t = A = 2$ sq. in. But, from the conditions of the problem,

$$t = \frac{1}{4} b.$$

$$\left.\begin{aligned} \text{Hence, } b t = \frac{1}{4} b^2 = 2;\ b^2 = 8;\ b = 2.828''. \\ t = \frac{2.828}{4} = .707''. \end{aligned}\right\} \text{ Ans.}$$

(745) From formula **118,** the deflection $s = a \frac{W l^3}{E I}$, and, from the table of Bending Moments, the coefficient a for the beam in question is $\frac{1}{48}$.

$W = 30$ tons $= 60,000$ lb.; $l = 54$ inches; $E = 30,000,000$; $I = \frac{\pi d^4}{64}$.

$$\text{Hence, } s = \frac{1 \times 60,000 \times 54^3}{48 \times 30,000,000 \times \frac{3.1416 \times 12^4}{64}} = .0064 \text{ in.} \quad \text{Ans.}$$

(746) (a) The circumference of a 7-strand rope is 3 times the diameter; hence, $C = 1\frac{1}{4} \times 3 = 3\frac{3}{4}''$.

Using formula **129,** $P = 1,000\ C^2 = 1,000 \times (3\frac{3}{4})^2 = 14,062.5$ lb. Ans.

(b) Using formula **127,**

$$P = 100\ C^2, \text{ or } C = \sqrt{\frac{P}{100}} = \sqrt{\frac{1\frac{3}{4} \times 2,000}{100}} = 5.92''. \quad \text{Ans.}$$

(747) Using formula **113**,

$$p = \frac{S_1 t}{r + t} = \frac{120{,}000}{\frac{8}{2} + 6} = 12{,}000 \text{ lb.} \quad \text{Ans.}$$

(748) The construction of the diagram of bending

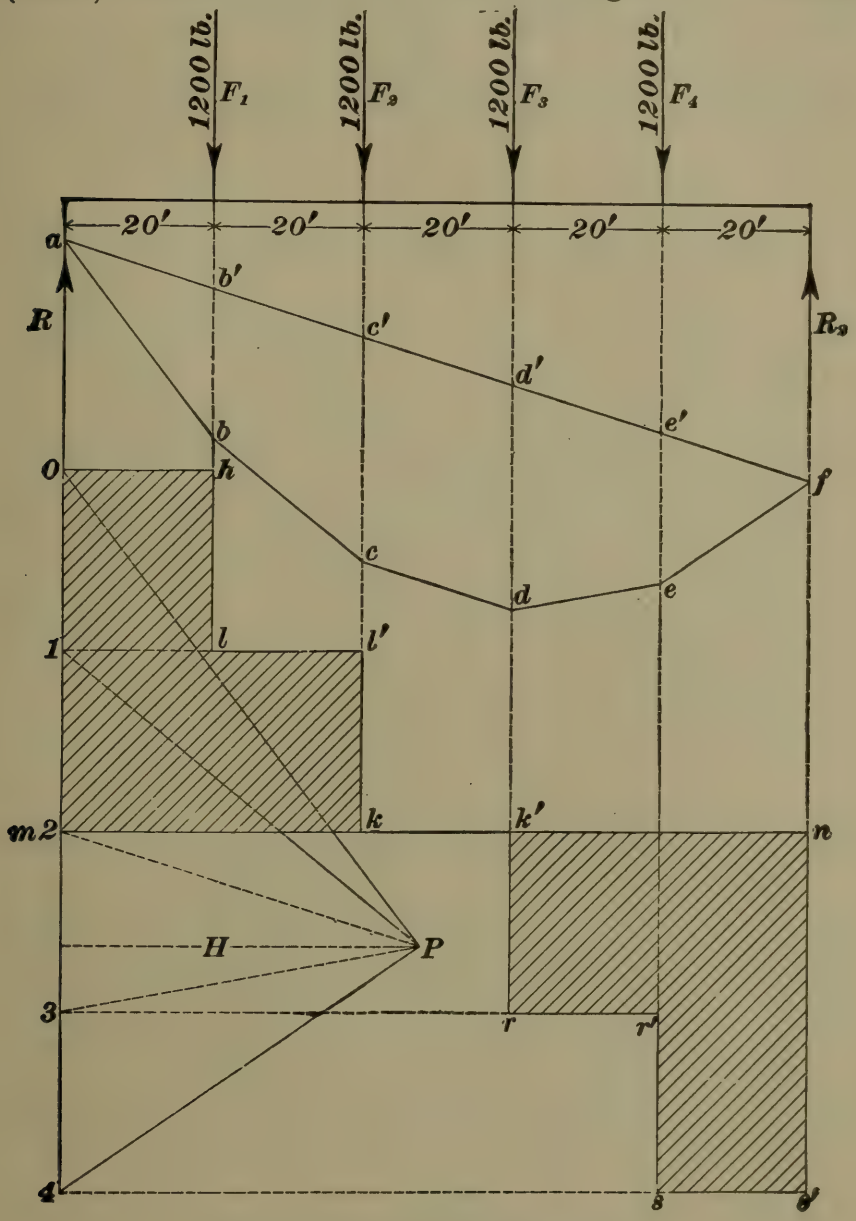

Scale of forces 1″=1600 lb.
Scale of distance 1″=32′

FIG. 66.

moments and shear diagram is clearly shown in Fig. 66. It is so nearly like that of Fig. 58 that a detailed description is unnecessary. It will be noticed that between k and k' the shear is zero, and that since the reactions are equal the shear at either support $= \frac{1}{2}$ of the load $= 2{,}400$ lb. The greatest intercept is $c\,c' = d\,d' = 30$ ft. The pole distance $H = 2{,}400$ lb. Hence, the bending moment $= 2{,}400 \times 30 = 72{,}000$ ft.-lb. $= 72{,}000 \times 12 = 864{,}000$ in.-lb.

APPLIED MECHANICS.

(QUESTIONS 749–808.)

(749) See Fig. 341 in Art. **1434.** The construction is shown in Fig. 67.

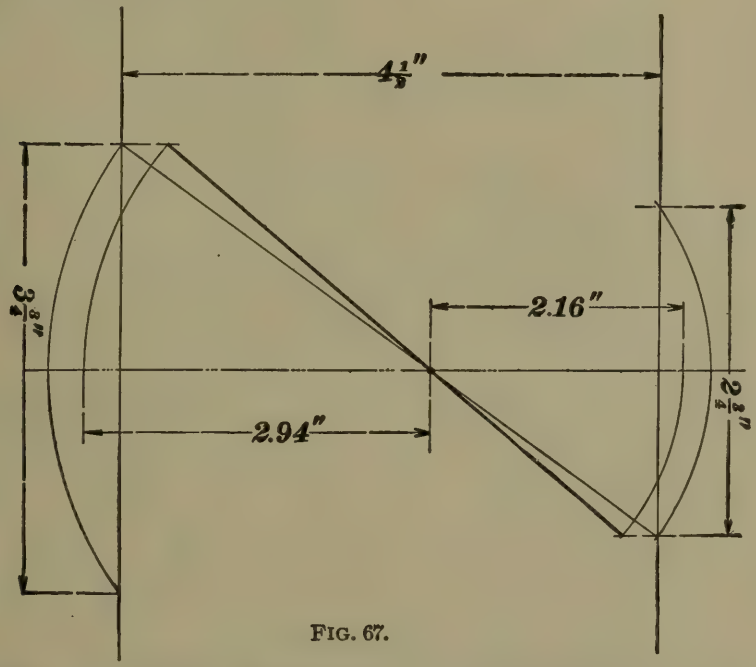

FIG. 67.

(750) The arms should be in the proportion 3 : 4. See Fig. 345 of Art. **1438.**

(751) In Fig. 68, let $A\ B$ and $C\ D$ be the two center lines of motion, making an angle of 10° with each other. Draw $a\ b$ parallel to $A\ B$, and at a distance of 3″ from it; also, $c\ d$ parallel to $C\ D$, and at a distance of 4″ from it. O, the point of intersection, will be the center of the lever, and $O\ E$ and $O\ H$ will be the center lines of the arms when in mid-position.

(752) The lengths of the lever arms will be as 3×12: 3.5::36:3.5. Either the motion shown in Fig. 343 or one of those shown in Fig. 344 may be used.

For notice of copyright, see page immediately following the title page.

(753) Circumference of pinion $= 12 \times 3.1416 = 37.699''$. Distance each moves $= 37.699 \times \frac{6.5}{360} = .68''$. Ans.

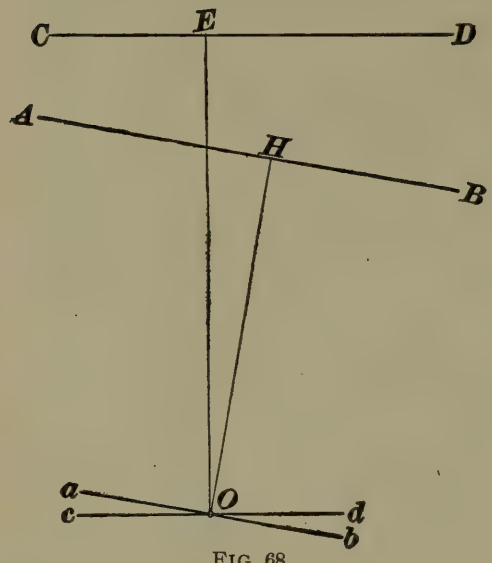

FIG. 68.

(754) The construction is shown in Fig. 69. This, in connection with the principles explained in Arts. **1432** to **1438**, should enable the student to lay out the motion.

(755) See Art. **1441**.

(756) The forward stroke, in this case, is the stroke from left to right, while the crank-pin moves through the lower part of its circle. Cross-head *A* leads during the forward stroke, and

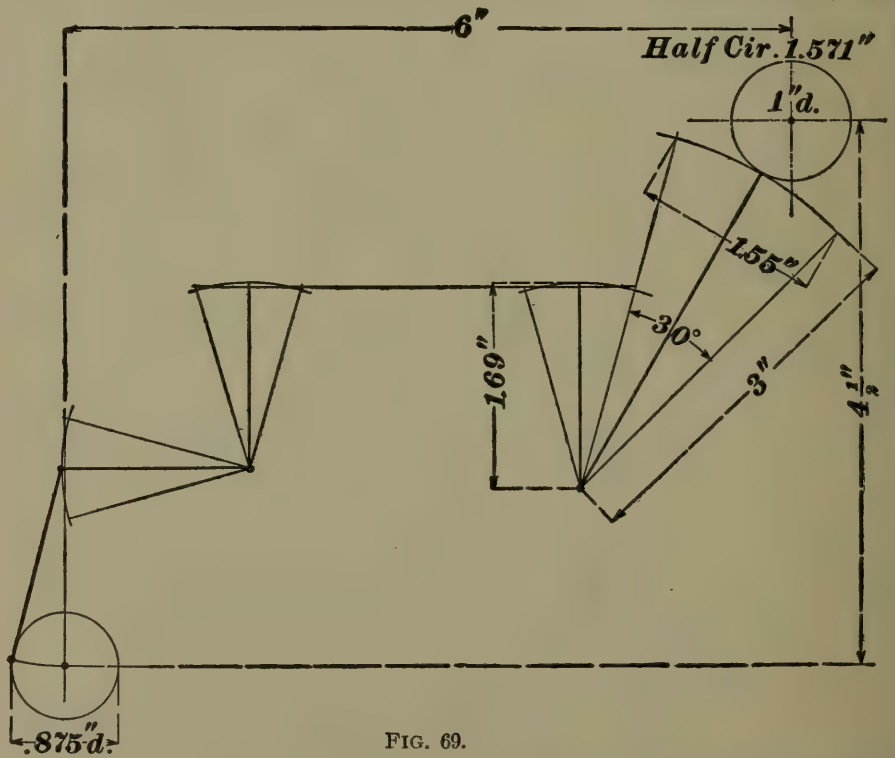

FIG. 69.

cross-head *B* during the return stroke. The construction to be used in determining this is shown in Fig. 349.

(757) The effect is the same as though one toggle-joint were used instead of two. First, find the pressure exerted by the screw. The distance that the power moves in one turn of the lever $= 20 \times 3.1416 = 62.832''$; distance that the nuts move $= \frac{1}{4}''$; velocity ratio $= \frac{62.832}{\frac{1}{4}} = 251.328$; force exerted $= 75 \times 251.328 = 18{,}849.6$ lb.

When distance $B = 16''$, the distance corresponding to h, in Fig. 352, $= \frac{16 - 12}{2} = 2''$. The distance corresponding to $O\,r$, therefore, equals $\sqrt{18^2 - 2^2} = \sqrt{320} = 17.888''$. Whence, applying formula **135,**

$$P = \frac{18{,}849.6 \times 17.888}{2 \times 2} = 84{,}295.4 \text{ lb.} \quad \text{Ans.}$$

(758) In the diagram in Fig. 70, $H\,E$, $C\,E$, $E\,R$, and

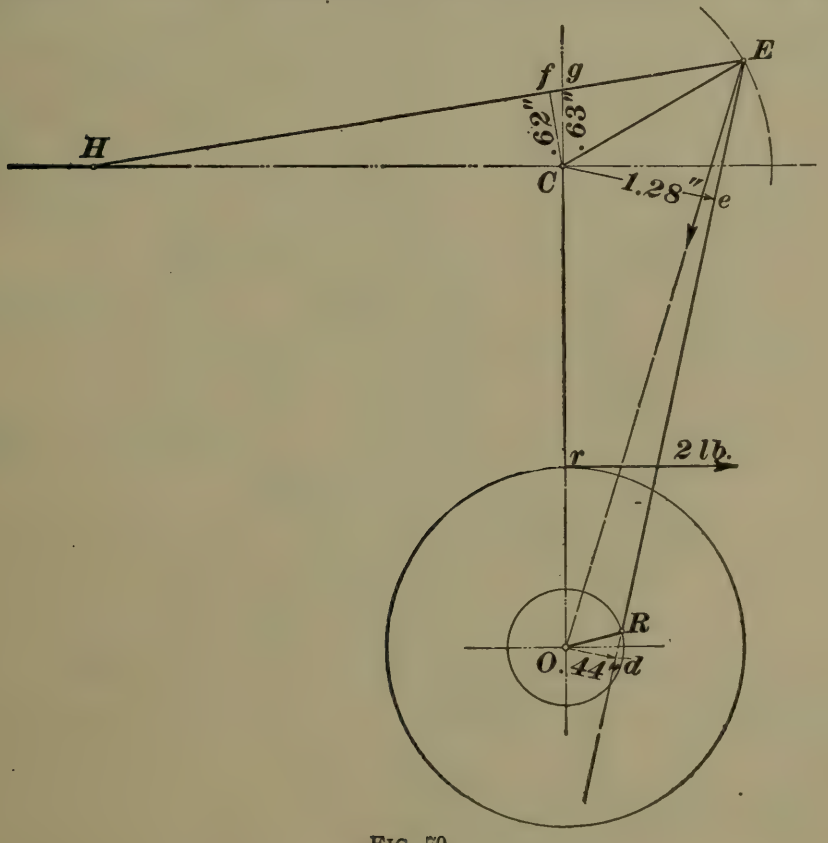

FIG. 70.

$O\,R$ are center lines of the parts which have the same letters in Fig. 22, question No. 758.

Draw Od perpendicular to ER produced; then by the principle of moments (see Art. **1447**), the thrust in the direction of $ER = \frac{2 \times Or}{Od} = \frac{2 \times 1.5}{.44} = 6.82$ lb. Erect the perpendicular Ce, and draw Cf perpendicular to HE and Cg perpendicular to HC. Then, the pull on the pin at H will equal $\frac{6.82 \times Ce}{Cf} = \frac{6.82 \times 1.28}{.62} = 14.08$ lb. Ans. Horizontal thrust of cross-head $= \frac{6.82 \times Ce}{Cg} = \frac{6.82 \times 1.28}{.63} = 13.86$ lb. Ans.

(759) See Art. **1457.**

(760) The construction is shown in Fig. 71. The various points are lettered in the same manner as in Fig. 358, and the description in Art. **1452** will apply to Fig. 71 in all respects; except that the circle must be divided into five equal parts instead of three, and the arc $d\,c\,b$ must contain three of these parts in order to have the ratio 3:2.

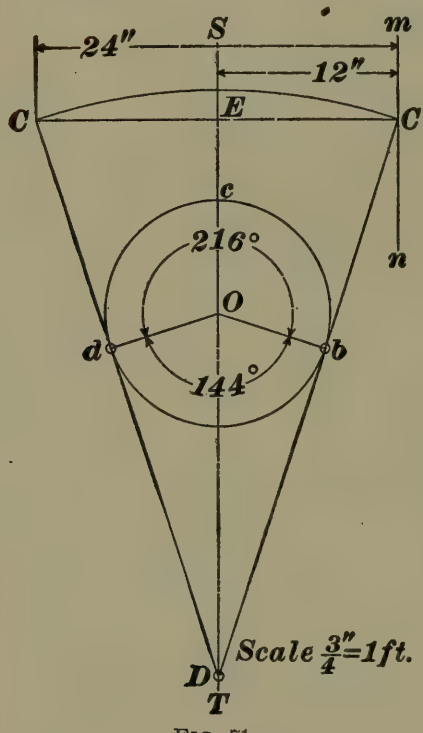

FIG. 71.

(761) (*a*) Fig. 72 (*a*) shows a diagram giving the proportions of the various parts; the arc $a\,e\,g$ is one-half as long as the arc $a\,c\,g$. See Arts. **1454** and **1455.**

(*b*) $360 \div 20 = 18$; hence, the crank-pin circle $d\,c\,b\,e$ must be divided into 18 equal parts. The motion is shown in Fig. 72 (*b*). See Art. **1455.**

(762) See Art. **1459.** (*a*) Greatest rate $= 50 \times \frac{1}{\cos 28°} = \frac{50}{.88295} = 56.63$ rev. Least rate $= 50 \times .88295 = 44.15$ rev.

(*b*) Connecting as described would double the variation

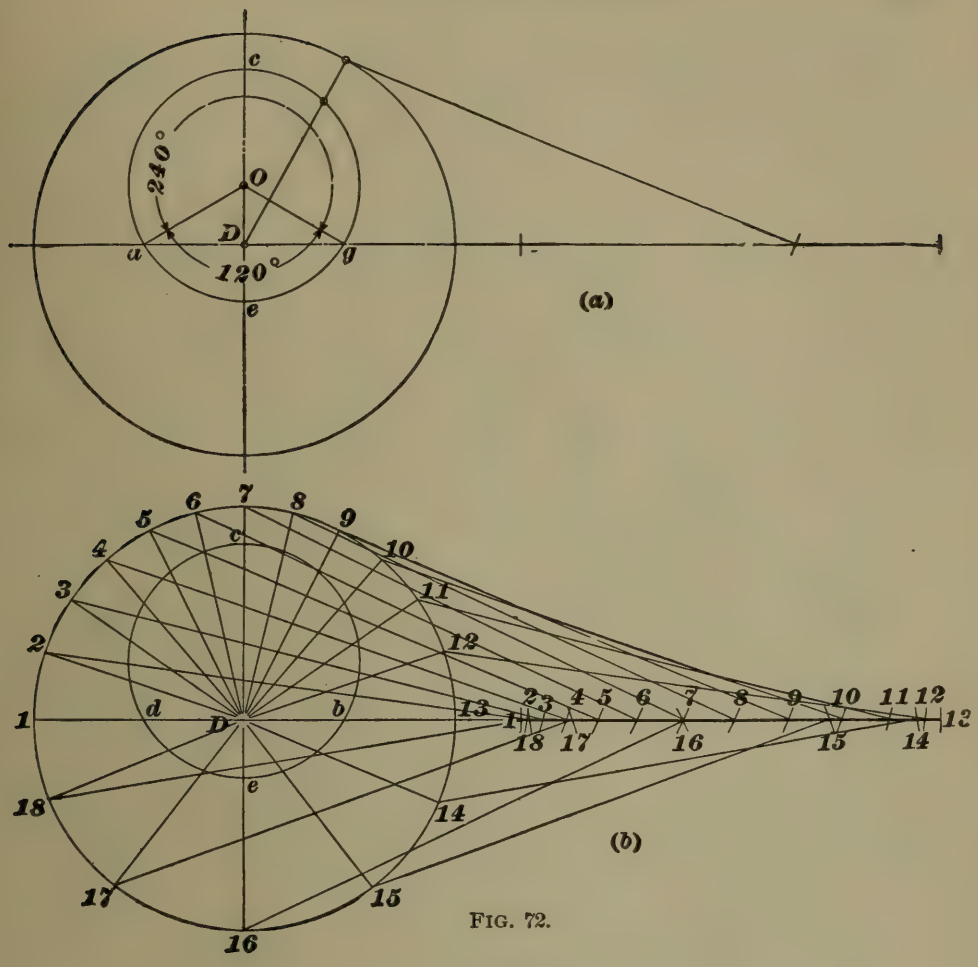
c
240°
O
D
a
g
120°
e
(a)
1
2
3
4
5
6
7
8
9
10
11
12
13
14
15
16
17
18
d
b
c
D
e
(b)

FIG. 72.

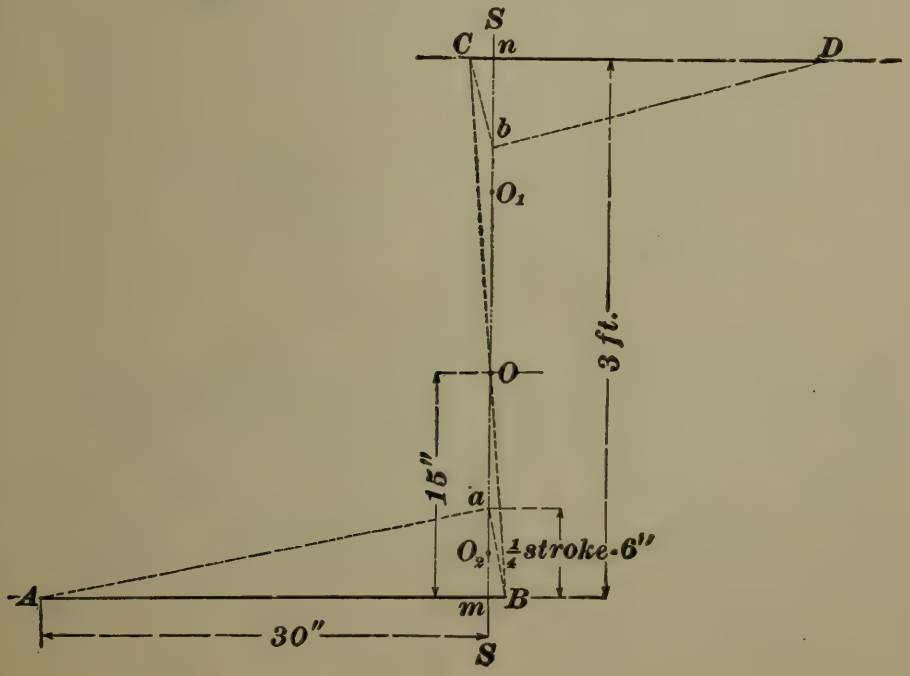
S
C
n
D
b
O_1
3 ft.
O
15"
a
O_2
$\frac{1}{4}$ stroke-6"
A
m
B
30"
S

FIG. 73.

(763) In Fig. 73, which is lettered the same as Fig. 364, draw the given center lines and locate points n and A from the data of the problem. Lay off $m\,a = \frac{1}{4}$ stroke; also $n\,b = \frac{1}{4}$ stroke. Connect A and a and draw $a\,B$ perpendicular to $A\,a$. Through O, draw $B\,O\,C$; connect C and b, and through b draw $b\,D$ perpendicular to $C\,b$. Measure the lengths $C\,D$ and $A\,B$.

(764) The construction of the cam is shown in Fig. 74.

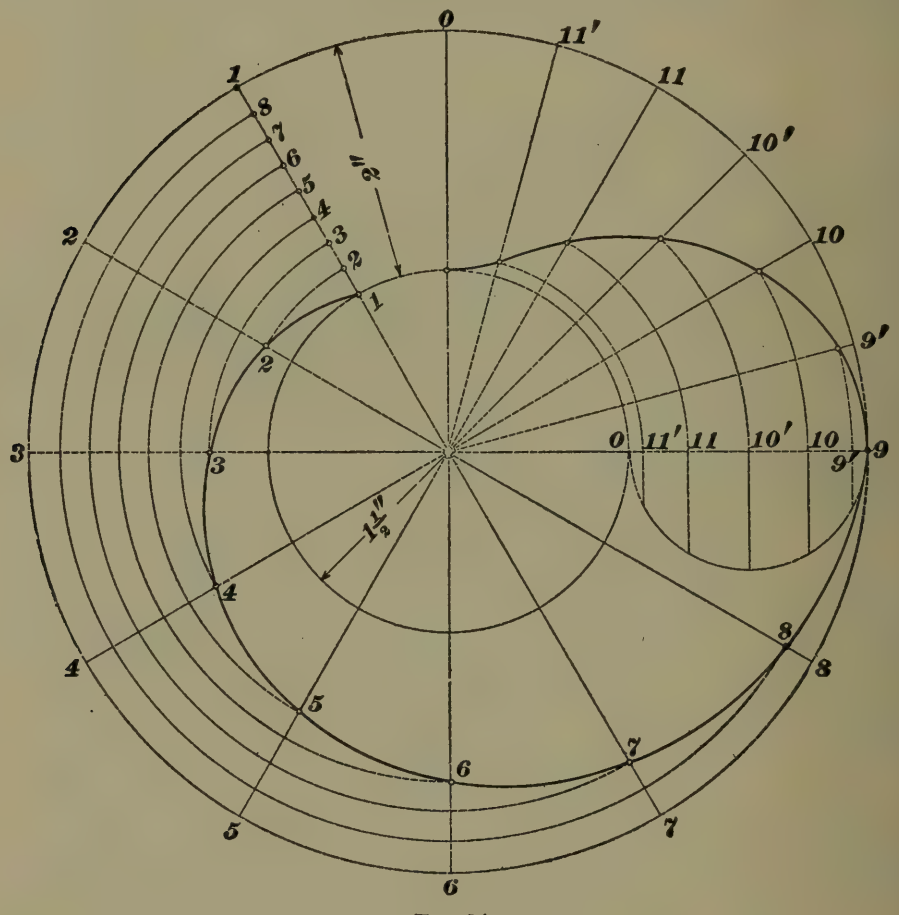

FIG. 74.

(765) The construction of the cam is shown in Fig. 75. It is similar in principle to the one shown in Fig. 366.

(766) The shape of the development of the groove is shown in Fig. 76. The method of laying it out is also indicated.

(767) This cam is shown in Fig. 77, and is like the one shown in Fig. 369 in all respects except that the dimensions are different. The description given in Art. **1474** will apply to this case.

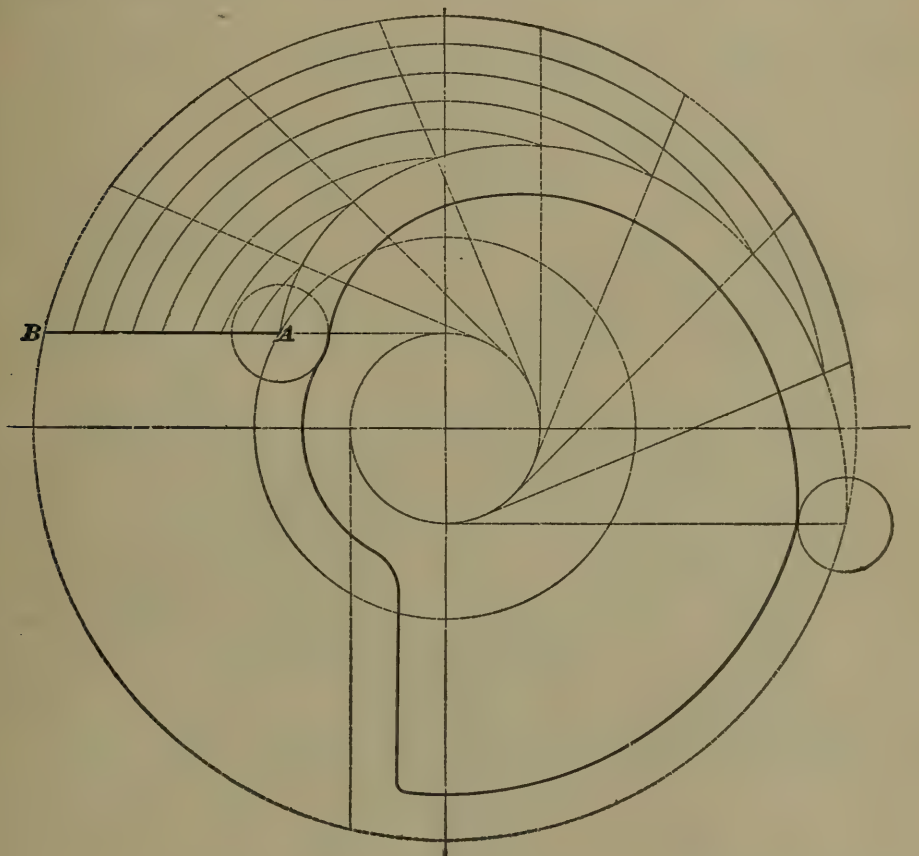

FIG. 75.

(768) See Art. **1478.** $\frac{52 \times 320}{48} = 346\frac{2}{3}$ rev. per min. Ans.

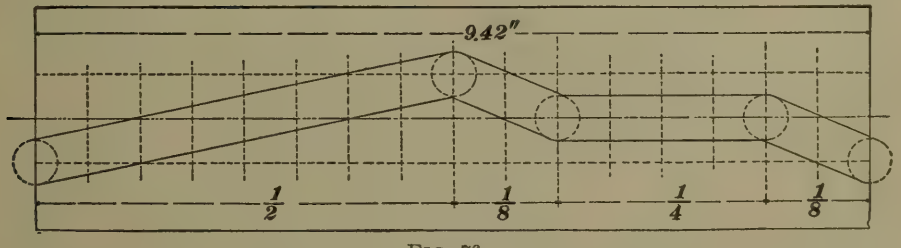

FIG. 76.

(769) $\frac{500 \times 10}{210} = 23.8'' = 23\frac{4}{5}''$. Ans.

(770) Substituting in formula **137**, $189 \times D_1 \times 20 = 1{,}800 \times 6 \times 3.5$, or

$$D_1 = \frac{1{,}800 \times 6 \times 3.5}{189 \times 20} = 10''. \quad \text{Ans.}$$

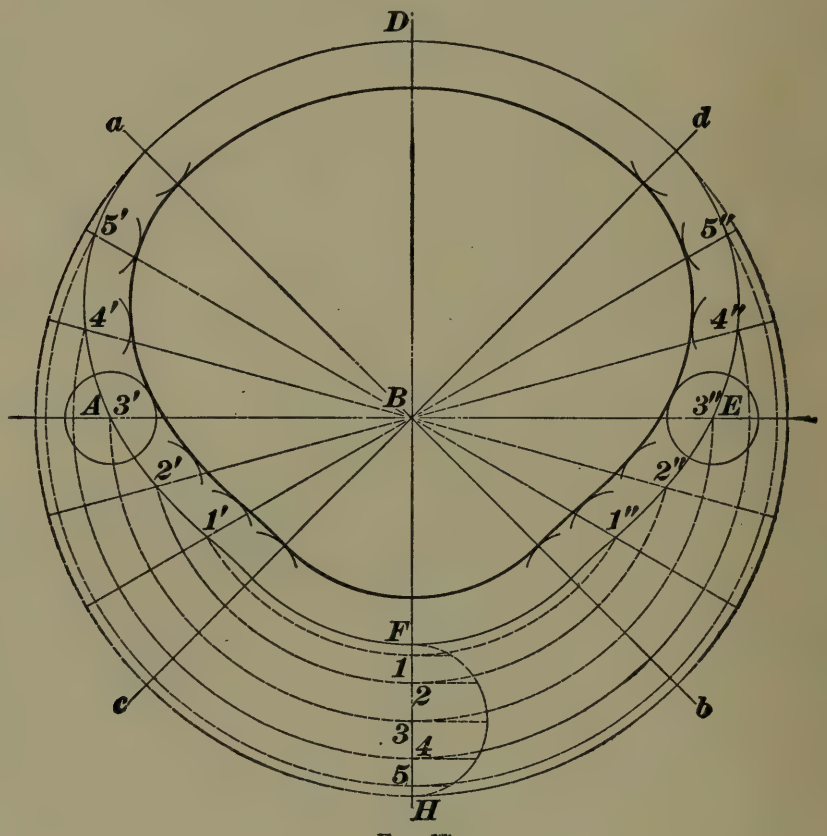

FIG. 77.

(771) See Art. **1481.** $900 \div 150 = 6$; $2 \times 3 = 6$, and $4 \times 1\frac{1}{2} = 6$. The ratios would then be 2 : 1 and 3 : 1; also 4 : 1 and $1\frac{1}{2}$: 1. Other ratios could be used.

(772) See Art. **1483.** (*a*) Effective pull in foot-pounds $= \frac{5 \times 33{,}000}{200 \times 3.1416 \times 3} = 87.54$ lb., nearly. Ans.

(*b*) Diameter in inches $= \frac{5 \times 33{,}000 \times 12}{50 \times 200 \times 3.1416} = 63$ inches. Ans.

(773) By laying out the two pulleys, the arc of contact is found to be about 150°. The allowable effective pull per inch in width, taken from the table is, therefore, 33.8 lb. Ans.

The effective pull of the belt $= \frac{6 \times 33{,}000 \times 12}{4 \times 3.1416 \times 1{,}500} = 126.05$ lb. $126.05 \div 33.8 = 3.7$ inches. A 4-inch belt would be used. Ans.

(774) The speed of the belt in feet per minute $= 14 \times 3.1416 \times 90$. Substituting in formula **142,**

$$W = \frac{630 \times 250}{14 \times 3.1416 \times 90} = 40'', \text{ nearly.}$$

The wheel should be 41 inches wide. Ans.

(775) Speed of belt $= 2 \times 205 \times 3.1416$. Substituting in formula **138,** $H = \frac{6 \times 2 \times 205 \times 3.1416}{900} = 8.6$ H. P., nearly. Ans.

(776) Calculating first for a double belt, we find that

$$H = \frac{6 \times 2 \times 205 \times 3.1416}{630} = 12.3, \text{ nearly.}$$

Next, calculating for a single belt with 30-inch pulley, we find that

$$H = \frac{6 \times 2.5 \times 205 \times 3.1416}{900} = 10.7, \text{ nearly.}$$

The double belt would, therefore, be the more effectual remedy. Ans.

(777) (*a*) Substituting in formula **147,**

$18 = d\sqrt{\frac{400}{70}}$; or $d = 18 \div \sqrt{5.7143} = 7.53$ inches. Ans.

(*b*) Substituting in formula **146,** $N = \sqrt{70 \times 400} = 167\frac{1}{3}$ rev. per min. Ans.

(778) (*a*) Substituting in formula **144,**

$$D = \frac{n_1 d}{N} = \frac{400 \times d}{225} = 1.78\, d.$$

Ratio, therefore, $= 1.78 : 1$. Ans.

(*b*) Substituting in formula **146,**

$225 = \sqrt{400 \times n_2}$, or $n_2 = \frac{225^2}{400} = 126.56$ rev. per min. Ans

(779) First calculate the middle diameter, using formula **148.**

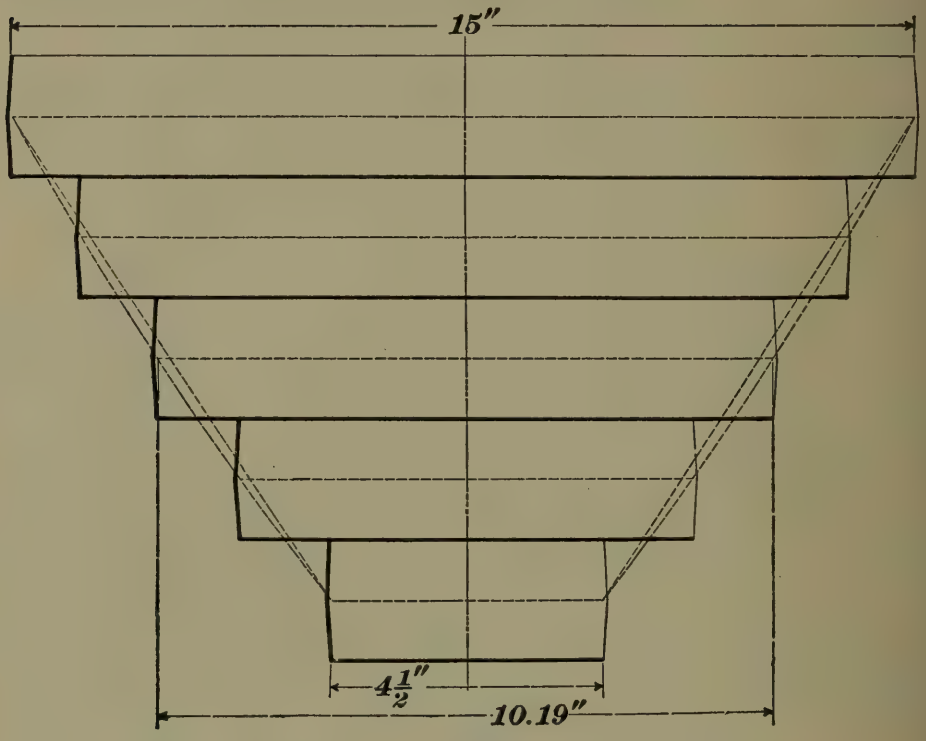

FIG. 78.

$$M = \frac{15 + 4.5}{2} + \frac{.08\,(15 - 4.5)^2}{20} = 9.75 + .44 = 10.19 \text{ inches.}$$

One of the pulleys is shown in Fig. 78.

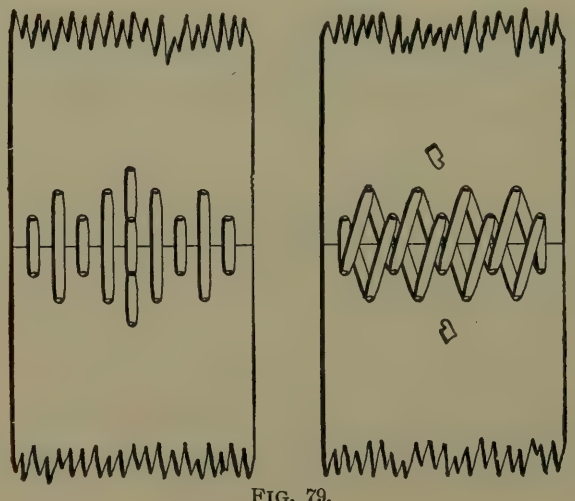

FIG. 79.

(780) See Fig. 79. An 8-inch belt should have a double row of holes, five in the row nearest the end. Space the holes equally.

(781) The arrangement of the pulleys is shown in Fig. 80. The belt leads from point *a*, on pulley *A*, into the plane

of pulley B; and from point b, on pulley B, into the plane of pulley A.

(782) Fig. 81 shows how the two shafts may be connected. The arrangement is entirely similar to that shown in Fig. 392.

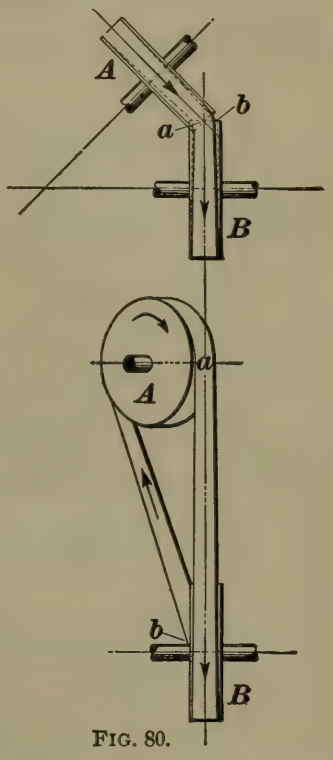

FIG. 80.

(783) $\frac{60 \times 30 \times 60 \times 30}{15 \times 15 \times 10} =$ number of revolutions of last shaft $= 1{,}440$ rev. per min. Ans.

The crossed belt and gears each reverse the direction of rotation; the open belt does not change the direction. Hence, the first and last shafts turn in the same direction.

(784) Gears B and C, being idlers, do not affect the number of rotations made by D. Hence, D makes $\frac{90}{90} = 1$ turn for every turn of A. As the number of axes is even, the first and last turn in opposite directions.

(785) Referring to Fig. 398, and applying formula **137,** we have $N \times d_1 \times d_2 = n \times f_1 \times f_2$, N and n being the number of revolutions of the spindle and lead screw, respectively. Solving for d_2,

$$d_2 = \frac{n \times f_1 \times f_2}{N \times d_1}.$$

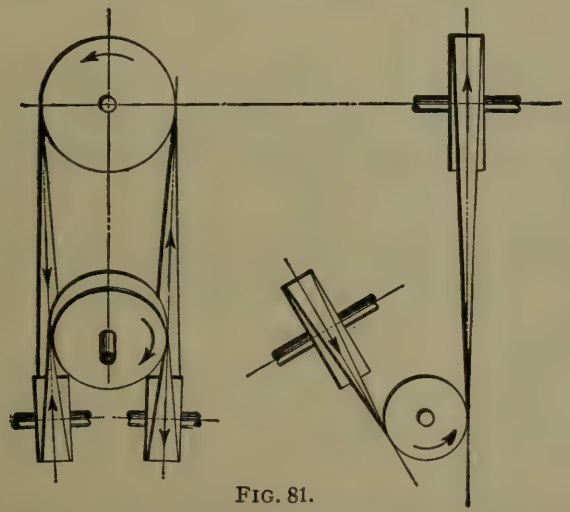
FIG. 81.

Now, to cut 4 threads per inch, the spindle must turn 4 times while the lead screw turns 8 times. Hence, sub-

stituting in the formula, we have $n = 8, f_1 = 2, N = 4, d_1 = 1$, and $d_2 = \frac{8 \times 2 \times f_2}{4 \times 1} = \frac{16 f_2}{4} = 4 f_2$.

Since $16 f_2$ remains constant for this lathe, we may hereafter write the formula as $d_2 = \frac{16 f_2}{N}$.

For 5 threads, $d_2 = \frac{16 f_2}{5} = \frac{16}{5} f_2$.

For 6 threads, $d_2 = \frac{16 f_2}{6} = \frac{8}{3} f_2$.

For 7 threads, $d_2 = \frac{16 f_2}{7} = \frac{16}{7} f_2$.

For 8 threads, $d_2 = \frac{16 f_2}{8} = 2 f_2$, etc.

To make out the table, we should aim to use the same gears as many times as possible. Start with 96 teeth for the gear on stud. Then, $f_2 = \frac{96}{4} = 24$ teeth. For 5 threads, $f_2 = \frac{5}{16} \times 96 = 30$, when $d_2 = 96$; for 6 threads, $f_2 = \frac{3}{8} \times 96 = 36$, when $d_2 = 96$; for 7 threads, $f_2 = \frac{7}{16} \times 96 = 42$; for 8 threads, $f_2 = \frac{1}{2} \times 96 = 48$. The other gears are found in the same manner.

(786) The gear makes $\frac{1}{2}$ a turn in passing the center at each end of the rack, two turns on top of the rack, and two turns while traveling over the under side.

(*a*) The circumference of the gear $= 10 \times 3.1416 = 31.416''$. Distance that the rack travels uniformly $= 2 \times 31.416 = 62.832'' = 5$ ft. $2.832''$. Ans.

(*b*) The motion is harmonic as the gear passes over the ends, and the horizontal distance traveled by the rack at each end = the radius of the gear; distance traveled at both ends = 2 × radius, or 10 inches. Hence, 5 ft. $2.832'' + 10''$ = 6 ft. $.832''$, the total travel. Ans.

(787) When driving through the worm and worm-wheel, 40 turns of the worm produce one turn of the driven shaft T. When driving through the gearing, 40 turns of the shaft S produce $\frac{40 \times 80}{20} = 160$ turns of T. Hence, the ratio of the "quick return" is 160 : 1.

(788) Circumference of gear $D_2 = 3.5 \times 3.1416 = 10.9956 = 11''$, nearly. Hence, for every foot travel of the table, D_2 makes $\frac{12}{11} = 1\frac{1}{11}$ revolutions. To find the number of turns made by the pulley for each foot passed over by the table, we have, therefore, $N \times 3.5 = \frac{12}{11} + 26$, or $N = \frac{12 \times 26}{11 \times 3.5} = 8.103+$. This, multiplied by the circumference of the pulley, $= \frac{8.103 \times 30 \times 3.1416}{12} = 63.6$. Hence, the ratio is 63.6 : 1. Ans.

(789) (*a*)

	D	F	A
Wheels locked	$+10$	$+10$	$+10$
Arm stationary	-10	$-10 \times \frac{100}{99}$	0
	0	$+10 - 10 \times \frac{100}{99}$	$+10$

Number turns of $F = 10 - \frac{1,000}{99} = -.101$ turn.

The wheel I, being an idler, it is not considered.

(*b*)

	D	F	A
Wheels locked	$+10$	$+10$	$+10$
	-10	$-10 \times \frac{100}{101}$	0
	0	$+10 - 10 \times \frac{100}{101}$	$+10$

Number turns of $F = 10 - \frac{1,000}{101} = +.099$. Ans.

(790) (*a*)

	D	F	A
Wheels locked	$+4$	$+4$	$+4$
Arm stationary	-4	$-\frac{5}{4}\times 4$	0
Arm stationary	$+1$	$+1\frac{1}{4}$	0
	$+1$	$+\frac{1}{4}$	$+4$

$F = +4 - 5 + 1\frac{1}{4} = +\frac{1}{4}$. Ans.

(*b*)

	D	F	A
Wheels locked	$+5$	$+5$	$+5$
Arm stationary	-5	$-\frac{5}{4}\times 5$	0
Arm stationary	-1	$-1\frac{1}{4}$	0
	-1	$-2\frac{1}{2}$	$+5$

$F = +5 - 6\frac{1}{4} - 1\frac{1}{4} = -2\frac{1}{2}$. Ans.

(791)

	D	F, D_1	F_1	A
Train locked	$+6$	$+6$	$+6$	$+6$
Arm fixed	-6	-60	$+\frac{40}{20}\times 60$	
	0	-54	$+126$	$+6$

(792) 20 turns of shaft S will produce $\frac{20\times 12\times 10}{3\times 100} =$ 8 turns of D, L. H. Hence,

	E	H, K	D
Wheels locked	-8	-8	-8
Arm fixed	$+8$	-8	0
Arm fixed	$+20$	-20	0
	$+20$	-36	-8

Pulley K makes -36 revolutions. Ans.

(793) See Arts. **1550** and **1558**.

(794) (*a*) See Art. **1552**.

(*b*) Substituting in formula **150**,

$$C = \frac{3.1416}{4\frac{1}{2}} = \frac{3.1416\times 2}{9} = .698 \text{ inch.} \quad \text{Ans.}$$

(*c*) Substituting in formula **149**, $P = \frac{3.1416}{1.1424} = 2\frac{3}{4}$. Ans.

(795) (*a*) From formula **151,**

$$D = \frac{N}{P} = \frac{30}{3} = 10 \text{ inches.} \quad \text{Ans.}$$

(*b*) Substituting in formula **152,**

$$O\,D = \frac{30 + 2}{3} = 10.667 \text{ inches.} \quad \text{Ans.}$$

(*c*) Addendum $= \frac{1}{3} = .3333''$; working depth $= 2 \times .3333 =$ .667 inch.

(*d*) Clearance $= .3333 \times \frac{1}{8} = .042''$; whole depth $= .667 + .042 = .709''$. Ans.

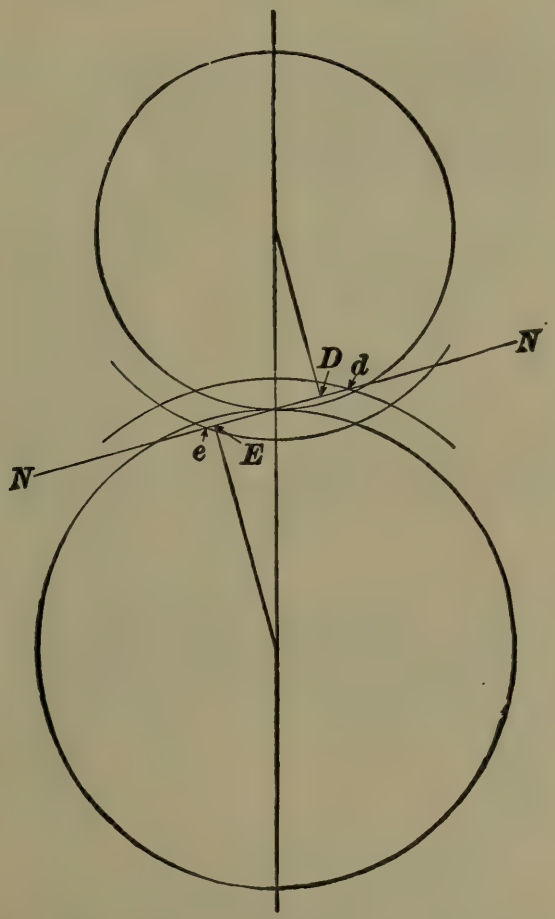

FIG. 82.

(796) See Fig. 414.

(797) (*a*) Number of teeth $= 48 \times 10 = 480$. Ans

(*b*) Number of teeth $= (14 - 2 \times \frac{1}{6}) \times 6 = 82$. Ans.

(798) From formula **153,** $D = \frac{1.25 \times 70}{3.1416} = 27.852$ inches. Ans.

(799) Substituting in formula **154,**

$$d = \frac{2AV}{V+v} = \frac{2 \times 15.5 \times 2}{2+3} = \frac{62}{5} = 12\tfrac{2}{5} \text{ inches.} \quad \text{Ans.}$$

Substituting in formula **155,** $D = \frac{2 \times 15.5 \times 3}{3+2} = \frac{93}{5} = 18\tfrac{3}{5}$ inches. Ans.

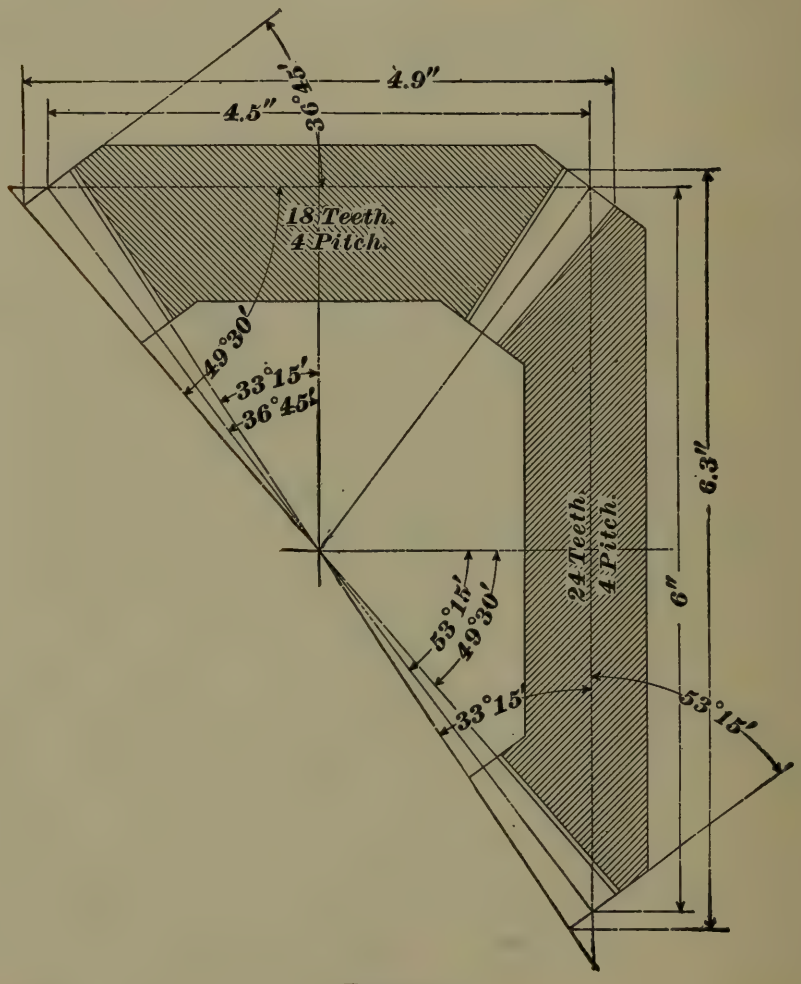

FIG. 83.

(800) (*a*) See Art. **1560.**

(*b*) See Art. **1563.**

(801) See Art. **1573.**

(802) Diameter of internal gear $= 30 \div 3 = 10$ inches.
Diameter of pinion $= 21 \div 3 = 7$ inches.

Diameter of describing circle $= \frac{10 - 7}{2} = 1\frac{1}{2}$ inches.

See Art. **1565.**

(803) To determine whether two involute gears will interfere, use the construction shown in Fig. 425. In Fig. 82, it will be observed that the addendum circles of both gears cut the line of action $N\ N$, at points e and d, outside of points E and D. Hence, both gears will interfere.

(804) The solution to this example is shown in Fig. 83.

(805) Since the worm is triple-threaded, it will drive the wheel three teeth at every revolution; in 100 revolutions, it will drive it $100 \times 3 = 300$ teeth, or $\frac{300}{40} = 7.5$ revolutions. Ans.

(806) (*a*) The wheel must have the same circular pitch as the worm, or $\frac{3}{4}''$, and, as the worm is single-threaded, the number of teeth in the wheel is the same as the ratio of speeds, or 40. Hence, $D = \frac{\frac{3}{4} \times 40}{3.1416} = 9.55''$. From Table 34, the addendum $= .3 \times \frac{3}{4} = .23''$; outside diameter $= 9.55 + (2 \times .23) = 10.01$, or, say $10''$; whole depth, $.23 + (.35 \times \frac{3}{4}) = .23 + .26 = .49''$.

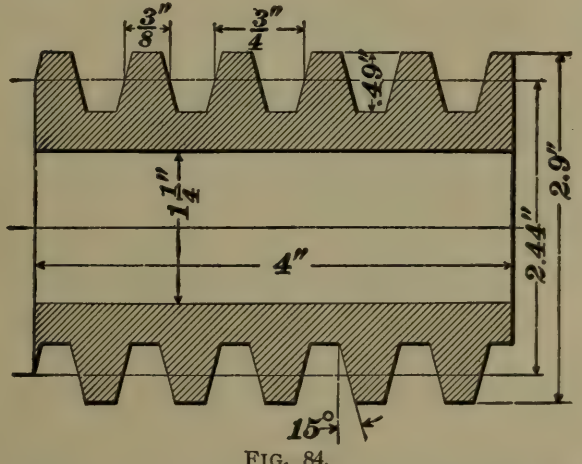

FIG. 84.

(*b*) The section of the worm is shown in Fig. 84.

(807) See Art. **1581.** Tangent of angle of thread $= \frac{\text{circum. of cylinder}}{\text{pitch}} = \frac{2 \times 3.1416}{\frac{1}{3}} = 2 \times 3 \times 3.1416 = 18.8496.$
The angle, therefore, equals 86° 58′, nearly. Ans.

(808) For every tooth moved, the screw would make $\frac{1}{72}$ of a turn. For every turn of the screw, the "feed" would be $\frac{1}{11\frac{1}{2}} = \frac{2}{23}$ inch. Hence, $\frac{1}{72} \times \frac{2}{23} = \frac{2}{1656} = \frac{1}{828}$ inch = the required "feed." Ans.

MACHINE DESIGN.

(QUESTIONS 959-1023.)

(959) See Art. **1910.**

(960) See Art. **1911.**

(961) (*a*) See Art. **1915.**

(*b*) See Art. **1912.**

(962) See Arts. **1924, 1925, 1927,** and **1928.**

(963) From Table 43 the number of threads per inch corresponding to the diameters given are 13, 9, 7, and $4\frac{1}{2}$, respectively. Applying formula **211:**

$$d_1 = d - \frac{1.3''}{n} = \frac{1}{2} - \frac{1.3''}{13} = .4''. \quad \text{Ans.}$$

$$d_1 = d - \frac{1.3''}{n} = \frac{7}{8} - \frac{1.3''}{9} = .731''. \quad \text{Ans.}$$

$$d_1 = d - \frac{1.3''}{n} = 1\frac{1}{4} - \frac{1.3''}{7} = 1.064''. \quad \text{Ans.}$$

$$d_1 = d - \frac{1.3''}{n} = 2 - \frac{1.3''}{4\frac{1}{2}} = 1.711''. \quad \text{Ans.}$$

(964) (*a*) Apply formula **208.**

For $\frac{1}{4}''$ diameter, $p = .24\sqrt{.25 + .625} - .175'' = .0495''$.

For $\frac{5}{8}''$ diameter, $p = .24\sqrt{.625 + .625} - .175'' = .0933''$.

For $1''$ diameter, $p = .24\sqrt{1 + .625} - .175'' = .131''$.

For $1\frac{1}{2}''$ diameter, $p = .24\sqrt{1.5 + .625} - .175'' = .175''$.

Now, applying formula **210,**

$$n = \frac{1}{.0495} = 20.2, \text{ say 20 threads per inch.} \quad \text{Ans.}$$

$$n = \frac{1}{.0933} = 10.7, \text{ say 11 threads per inch.} \quad \text{Ans.}$$

For notice of copyright, see page immediately following the title page.

$$n = \frac{1}{.131} = 7.6, \text{ say } 8 \text{ threads per inch.} \quad \text{Ans.}$$

$$n = \frac{1}{.175} = 5.7, \text{ say } 6 \text{ threads per inch.} \quad \text{Ans.}$$

(*b*) By formula **210**, $n = \frac{1}{p}$; or, $p = \frac{1}{n}$. Hence,

$$p = \frac{1}{20}'' = \text{pitch for } \tfrac{1}{4}'' \text{ screw.} \quad \text{Ans.}$$

$$p = \frac{1}{11}'' = \text{pitch for } \tfrac{5}{8}'' \text{ screw.} \quad \text{Ans.}$$

$$p = \frac{1}{8}'' = \text{pitch for } 1'' \text{ screw.} \quad \text{Ans.}$$

$$p = \frac{1}{6}'' = \text{pitch for } 1\tfrac{1}{2}'' \text{ screw.} \quad \text{Ans.}$$

(965) (*a*) See Art. **1931.**

(*b*) $\frac{1}{2}'' \div 3 = \frac{1}{6}''$. Ans.

(966) See Art. **1930.**

(967) From Table 25, the ultimate tensile strength of wrought iron is 55,000 lb. per sq. in. From Table 28, the factor of safety for a varying stress is 6. Hence, the safe stress per square inch is $\frac{55,000}{6}$, and $11,800 \div \frac{55,000}{6} = \frac{11,800 \times 6}{55,000} = 1.2873$ sq. in. = area at bottom of thread. From Table 43, the nearest area in the last column is 1.2928 sq. in., corresponding to a nominal diameter of $1\frac{1}{2}''$. Hence, the bolt should have a diameter of $1\frac{1}{2}''$. Ans.

(968) Using formula **217,**

$$a = \frac{11,800}{6,000} = 1.967 \text{ sq. in.}$$

From Table 43, the nearest diameter corresponding to this area is $1\frac{7}{8}''$. Ans.

The reason that this diameter should be used instead of that calculated in the last example is that the bolt is greatly weakened by the sharp corners left by the thread cutting tool,

and the strength is not equal to that of a round bar whose diameter is the same as the diameter at the bottom of the thread.

(969) Using formula **218,**

$$d = .0228\sqrt{12{,}000} = 2\tfrac{1}{2}''. \quad \text{Ans.}$$

$$d_1 = 2.5 \times \frac{4}{5} = 2''. \quad \text{Ans.}$$

Using formula **219,**

$$n_1 = \frac{12{,}000}{300 \times 2^2} = 10 \text{ threads.} \quad \text{Ans.}$$

(970) The dimensions of both head and nut are the same. Hence, apply formulas **220-226.**

Height of head or nut =

$$h = \frac{7}{8}'' - \frac{1}{16}'' = \frac{13}{16}''. \quad \text{Ans.}$$

Diameter of nut or head across flats =

$$D = 1\frac{1}{2} \times \frac{7}{8}'' + \frac{1}{16}'' = 1\frac{3}{8}''. \quad \text{Ans.}$$

Diameter of nut or head across corners =

$$D_1 = 1.73 \times \frac{7}{8}'' + .07'' = 1.58''. \quad \text{Ans.}$$

Diameter of washer =

$$D_2 = 1\frac{1}{8} \times 1.58'' = 1.78'', \text{ say } 1\frac{25}{32}''. \quad \text{Ans.}$$

Thickness of washer =

$$t = .15 \times \frac{7}{8}'' = .13'', \text{ say } \frac{1}{8}''. \quad \text{Ans.}$$

Fig. 605 shows the manner of representing the bolt, except that a hexagonal head is to be shown instead of a square one, and the letters are to be replaced by the sizes calculated.

(971) In the last example, D was found to be $1\frac{3}{8}''$. The other dimensions are readily obtained from Fig. 606. The student should give the handle of the wrench a slight taper to improve the looks.

(972) From Table 28, Art. **1362,** the factor of safety for a varying stress is 6 for wrought iron. Hence, area of cross-section of eye bolt $= 2{,}500 \div \frac{55{,}000}{6} = .273$ sq. in. The corresponding diameter $= d = \sqrt{\frac{.273}{.7854}} = .59''$, say $\frac{5}{8}''$. Ans.

Applying formula **227,**

$$d_1 = .8 \times \frac{5}{8} = \frac{1}{2}''. \quad \text{Ans.}$$

Taking $a\,b$ equal to $\frac{1}{2}d^2$, $a\,b = \frac{1}{2} \times \left(\frac{5}{8}\right)^2 = .195$ sq. in.

If we assume that $a = \frac{1}{2}b$, $a\,b = \frac{1}{2}b^2$, and $b = \sqrt{.195 \times 2} = .624''$, say $\frac{5}{8}''$. Ans.

Whence, $$a = \frac{1}{2} \times \frac{5}{8} = \frac{5}{16}''. \quad \text{Ans.}$$

(973) See Art. **1944.**

(974) See Fig. 623. Take height of thin nut as one-half that of outer or standard size nut.

(975) Both devices increase the friction between the threads of the screw and the threads in the nut; in this respect the principle is the same in both devices.

(976) Taking d as $1\frac{1}{4}''$, the various dimensions are readily obtained from Fig. 642. The student may supply any dimension that is omitted, taking such dimensions as he deems best.

(977) Applying formula **233,**

$$b = \frac{1}{4} \times 4 = 1''. \quad \text{Ans.}$$

$$t = \frac{1}{6} \times 4 = \frac{2}{3}'', \text{ say } \frac{11}{16}''. \quad \textbf{Ans.}$$

(978) Applying formula **233,**

$$b = \frac{1}{4} \times 12 = 3''. \quad \text{Ans.}$$

$$t = \frac{1}{6} \times 12 = 2''. \quad \text{Ans.}$$

(979) Applying formula **235,**

$$b = .2 \times 2\frac{7}{16} + .16 = .65'', \text{ say } \frac{11}{16}''. \quad \text{Ans.}$$

$$t = .1 \times 2\frac{7}{16} + .16 = .4'', \text{ say } \frac{7}{16}''. \quad \text{Ans.}$$

(980) Applying formula **237,**

$$b = \frac{1.5}{8}'' + \frac{1}{16}'' = \frac{1}{4}''. \quad \text{Ans.}$$

$$t = \frac{3 \times 1.5}{16}'' + \frac{1}{16}'' = \frac{5.5}{16}'', \text{ say } \frac{3}{8}''. \quad \text{Ans.}$$

(981) Applying formula **238,**

$$d = 5\sqrt[3]{\frac{1.85}{110}} = 1.26''.$$

Using formulas **236,**

$$b = \frac{1.26}{3}'' = .42'', \text{ say } \frac{7}{16}''. \quad \text{Ans.}$$

$$t = \frac{1.26}{5}'' = \frac{1}{4}''. \quad \text{Ans.}$$

(982) Area of rod corresponding to diameter $d_1 = \frac{7{,}000}{6{,}000} = 1.167$ sq. in.

Hence, $d_1 = \sqrt{\frac{1.167}{.7854}} = 1.22''$, say $1\frac{1}{4}''$. Ans.

From formula **239,**

$$d_1 = .816\,d, \text{ or } d = \frac{d_1}{.816} = \frac{1.25}{.816} = 1.53'' = 1\frac{17}{32}''. \quad \text{Ans.}$$

The remaining dimensions are readily calculated by using formula **239.** The dimension b in Figs. 656 and 658 should extend to the top of the cotter instead of to the top of the slot, as shown. The student may take b as the depth of the cotter.

(983) Applying formula **241,**

$$d = 1.5\sqrt{\frac{10{,}000}{\sqrt{14{,}000 \times 400}}} = 3'', \text{ nearly.} \quad \text{Ans.}$$

Hence, $l = \frac{10{,}000}{3 \times 400} = 8.33''$, say $8\frac{3}{8}''$. Ans.

(984) Applying formula **244,**

$$d = 1.06\sqrt{\frac{15{,}000}{\sqrt{14{,}000 \times 1{,}200}}} = 2'', \text{ nearly.} \quad \text{Ans.}$$

Using formula **245,**

$$l = \frac{15{,}000}{2 \times 1{,}200} = 6\tfrac{1}{4}''. \quad \text{Ans.}$$

(985) From formula **246,**

$$d_1 = d\sqrt[3]{\frac{l_1}{l}} = 1\ 5\sqrt[3]{\frac{2.5}{2.125}} = 1.583'', \text{ say } 1\tfrac{19}{32}''. \quad \text{Ans.}$$

(986) Applying formula **251,**

$$d_1 = \sqrt{8^2 + \frac{15{,}000}{15 \times \pi \times 6}} = 10.9'', \text{ say } 10\tfrac{7}{8}''. \quad \text{Ans.}$$

Since $t = .8\,e$, and $e = \frac{d_1 - d}{2}$, $t = \frac{.8(d_1 - d)}{2} = .4\,(10\frac{7}{8} - 8)$ $= 1.15''$, say $1\frac{3}{16}''$. Ans.

(987) Applying formula **249,** second column of Table 47,

$$d = .07\sqrt{1{,}200} = 2.425'', \text{ say } 2\tfrac{7}{16}''. \quad \text{Ans.}$$

(988) (*a*) Apply formula **256.** Here, $m = \frac{4}{7}$; hence,

$$d_1 = 10\sqrt[3]{\frac{1}{1 - (\frac{4}{7})\,4}} = 10.38'', \text{ say } 10\tfrac{3}{8}''. \quad \text{Ans.}$$

(*b*) Diameter of hole $= 10.38'' \times \frac{4}{7} = 6''$, nearly. Ans.

(*c*) Weight of solid shaft per foot of length =

$$\frac{.7854 \times 10^2}{144} \times 490 = 267 \text{ lb., nearly.}$$

Weight of hollow shaft per foot of length =

$$\frac{.7854\,[(10\frac{3}{8})^2 - 6^2]}{144} \times 490 = 191 \text{ lb., nearly.}$$

Difference $= 267 - 191 = 76$ lb. per foot. Ans.

(989) (*a*) Using formula **208,**

$$p = .24\sqrt{3.25 + .625} - .175 = .3'', \text{ nearly.}$$

By formula **210,**

$$n = \frac{1}{.3} = 3.333, \text{ say } 3\frac{1}{2}.$$

Then, $p = \frac{1}{n} = \frac{1}{3.5} = \frac{2''}{7}$. Ans.

(*b*) Using formula **212,**

$$p = \frac{7}{5} = 1.4'', \text{ say } 1\frac{3}{8}''. \quad \text{Ans.}$$

(*c*) Using formula **215,**

$$p = \frac{2 \times 12}{15} = 1.6'', \text{ say } 1\frac{5}{8}''. \quad \text{Ans.}$$

(990) (*a*) Using formula **210** for each case,

$n = 1 \div \frac{2}{7} = 3\frac{1}{2}$; $n = 1 \div 1\frac{3}{8} = \frac{8}{11}$, and $n = 1 \div 1\frac{5}{8} = \frac{8}{13}$. Ans.

(*b*) Using formula **211** for the first case,

$$d_1 = d - \frac{1.3''}{n} = 3.25'' - \frac{1.3''}{3.5} = 2.879''. \quad \text{Ans.}$$

For the second case, it will be remembered that $t = \frac{1}{2}p$; hence,

$$d_1 = d - 2\left(\frac{1}{2}p\right) = d - p = 7'' - 1\frac{3}{8}'' = 5\frac{5}{8}''. \quad \text{Ans.}$$

For the third case, $t_1 = \frac{3}{4}t = \frac{3}{4}p$; hence,

$$d = d - 2\left(\frac{3}{4}p\right) = d - 1.5p = 12 - 1.5 \times 1.625 = 9\frac{9}{16}''. \quad \text{Ans.}$$

(991) See Art. **1930.**

(992) See Art. **1935.** Using formula **217,**

$$a = \frac{15{,}600}{6{,}000} = 2.6 \text{ sq. in.}$$

Referring to Table 43, this area lies between the areas corresponding to diameters of 2″ and $2\frac{1}{4}''$; choosing the larger, the outside diameter should be $2\frac{1}{4}''$. Ans.

(993) From Table 43, the effective area of a 4-inch bolt is 9.993 sq. in. Referring to Art. **1935,** and using formula **217,**

$W = a\,S_t = 2 \times 9.993 \times 8{,}000 = 159{,}888$ lb., say 80 tons. Ans.

(994) (*a*) Using formula **218,**

$d = .0228\sqrt{3{,}600} = 1.368''$, say $1\frac{3}{8}''$. Ans.

(*b*) Using formula **219,**

$$n_1 = .0052 \times \frac{3{,}600}{1.375^2} = 9.89, \text{ say 10 threads.} \quad \text{Ans.}$$

(995) Applying formula **217,** and taking S_t as 6,000 lb. per sq. in.,

$$a = \frac{3{,}200}{6{,}000} = .533 \text{ sq. in.}$$

From Table 43, the nearest diameter is 1″.

Applying formulas **220, 221, 224,** and **226,**

$$D = 1\tfrac{1}{2} \times 1'' + \tfrac{1}{16}'' = 1\tfrac{9}{16}''. \quad \text{Ans.}$$

$$h = h' = 1'' - \tfrac{1}{16}'' = \tfrac{15}{16}''. \quad \text{Ans.}$$

$$D_1 = 2.12 \times 1'' + .09'' = 2.21''. \quad \text{Ans.}$$

The student can readily make the drawing by referring to Fig. 605. Omit the washer.

(996) The dimensions are readily obtained by aid of formula **229.**

(997) (*a*) Using formula **233** for all three cases,

$$b = \tfrac{1}{4}\,d = \tfrac{1}{4} \times 3\tfrac{1}{2} = \tfrac{7}{8}''. \quad \text{Ans.}$$

$$t = \tfrac{1}{6}\,d = \tfrac{1}{6} \times 3\tfrac{1}{2} = \tfrac{7}{12}'', \text{ say } \tfrac{9}{16}''. \quad \textbf{Ans.}$$

(*b*) $$b = \tfrac{1}{4} \times 5 = 1\tfrac{1}{4}''. \quad \text{Ans.}$$

$$t = \tfrac{1}{6} \times 5 = \tfrac{5}{6}'', \text{ say } \tfrac{13}{16}''. \quad \textbf{Ans.}$$

(*c*) $b = \frac{1}{4} \times 1\frac{1}{2} = \frac{3}{8}''$. Ans.

$t = \frac{1}{6} \times 1\frac{1}{2} = \frac{1}{4}''$. Ans.

(998) Each key takes up $1{,}000 \div 2 = 500$ H. P. Hence, applying formula **232,**

$$b = \frac{18\,H}{l\,d\,N} = \frac{18 \times 500}{10 \times 10 \times 50} = 1.8'', \text{ say } 2''. \quad \text{Ans.}$$

$$t = \frac{2}{3}\,b = \frac{2}{3} \times 2 = 1.333'', \text{ say } 1\frac{3}{8}''. \quad \text{Ans.}$$

(999) For the driven pulley, apply formula **234.**

$$b = \frac{2.75''}{7} + \frac{1}{4}'' = .64'', \text{ say } \frac{5}{8}''. \quad \text{Ans.}$$

$$t = \frac{2.75''}{12} + \frac{3}{16}'' = .42'', \text{ say } \frac{7}{16}''. \quad \text{Ans.}$$

For the driving pulley, apply formula **235.**

$$b = .2 \times 4.5'' + .16'' = 1.06'', \text{ say } 1\frac{1}{16}''. \quad \text{Ans.}$$

$$t = .1 \times 4.5'' + .16'' = .61'', \text{ say } \frac{5}{8}''. \quad \text{Ans.}$$

(1000) Using formulas **237,**

$$b = \frac{1.75}{8} + \frac{1}{16} = .28'', \text{ say } \frac{5}{16}''. \quad \text{Ans.}$$

$$t = \frac{3 \times 1.75}{16} + \frac{1}{16} = .39'', \text{ say } \frac{3}{8}''. \quad \text{Ans.}$$

(1001) It is evident that a $3\frac{3}{4}''$ shaft will transmit a great deal more than 6 H. P. at 135 R. P. M. Hence, using formulas **238** and **236,**

$$d = 5\sqrt[3]{\frac{6}{135}} = 1.77''. \quad \text{Therefore,}$$

$$b = \frac{1.77}{3} = .59'', \text{ say } \frac{5}{8}''. \quad \text{Ans.}$$

$$t = \frac{1.77}{5} = .354'', \text{ say } \frac{3}{8}''. \quad \text{Ans.}$$

(1002) The calculation of d, d_1, and the other dimensions is in all respects similar to that required in example 982. The various dimensions in the figure may be obtained by using formula **239.**

(1003) According to Art. **1969,** $b\,t$ should equal $\frac{5}{4}$ times the sectional area of the strap, and $t = \frac{1}{4}\,b$. Hence, $b \times \frac{1}{4}\,b = \frac{5}{4} \times \frac{3}{4} \times 3.5$; or, $b^2 = 13.125$ sq. in., and $b = \sqrt{13.125} = 3.623''$, say $3\frac{5}{8}''$. Ans.

$$t = \frac{1}{4}\,b = \frac{1}{4} \times 3\frac{5}{8} = \frac{29}{32}'', \text{ say } \frac{15}{16}''. \quad \text{Ans.}$$

The other dimensions are readily obtained from Fig. 661, and the drawing can be made by referring to it.

(1004) Art. **1969** states that b may be made equal to d when a steel cotter is used in a wrought-iron rod. Hence,

$$b = d = 2\frac{1}{2}''. \quad \text{Ans.}$$

$$\text{Also,} \qquad t = \frac{1}{4}\,b = \frac{1}{4} \times 2\frac{1}{2} = \frac{5}{8}''. \quad \text{Ans.}$$

(1005) From Table 43, the area at the bottom of the thread for a $3\frac{1}{2}''$ standard screw is 7.55 sq. in. Referring to Art. **1935,** it would not be advisable to take S_t greater than 4,000 lb. per sq. in. in this case. Hence, $W = a\,S_t = 7.55 \times 4{,}000 = 30{,}200$ lb. = load which rod may safely carry.

When held by a cotter, the rod is weakened owing to the cutting out of the slot, the equivalent diameter being (see formula **239**) $d_1 = .816\,d = .816 \times 3.5 = 2.856''$; that is, a rod having a diameter of $2.856''$ would be, theoretically, of the same strength as a rod having a slot in it for a cotter and $3\frac{1}{2}''$ in diameter. Hence, the equivalent area is $2.856^2 \times .7854 = 6.41$ sq. in. The area is less than in the first case, but the value of S_t may now be taken as $\frac{55{,}000}{10} = 5{,}500$ lb. per sq.

in., and the safe load is $6.41 \times 5{,}500 = 35{,}255$ lb. Hence, the rod and cotter are, apparently, slightly stronger than the rod and nut.

(1006) (*a*) Applying formula **240,**

$$d = 2.26\sqrt{\frac{5{,}000}{4{,}250} \times 1.5} = 3''. \quad \text{Ans.}$$

$$l = 1\frac{1}{2}d = 1\frac{1}{2} \times 3 = 4\frac{1}{2}''. \quad \text{Ans.}$$

(*b*) Pressure per square inch of projected area =

$$p = \frac{5{,}000}{3 \times 4.5} = 370 \text{ lb.} \quad \text{Ans.}$$

(1007) Applying formula **240,**

$$d = l = 2.26\sqrt{\frac{10{,}000}{8{,}500} \times 1} = 2.45'', \text{ say } 2\frac{1}{2}''. \quad \text{Ans.}$$

(1008) See example in Art. **1975,** and Table 46, Art. **1978.**

$$d = 1.5\sqrt{\frac{17{,}800}{\sqrt{12{,}000 \times 750}}} = 3.65'', \text{ say } 3\frac{5}{8}''. \quad \text{Ans.}$$

Whence, $l = \dfrac{17{,}800}{3\frac{5}{8} \times 750} = 6.55''$, say $6\frac{1}{2}''$. Ans.

(1009) As in example 1008,

$$d = 1.5\sqrt{\frac{1{,}750}{\sqrt{8{,}500 \times 275}}} = 1.6'', \text{ say } 1\frac{5}{8}''. \quad \text{Ans.}$$

Whence, $l = \dfrac{1{,}750}{1\frac{5}{8} \times 275} = 3.92''$, say $4''$. Ans.

(1010) Here, $l = 2d$. From formula **242,** $l\,d = \dfrac{P}{p}$.

Hence, $2d \times d = 2d^2 = \dfrac{3{,}750}{550}$; or, $d = 1.846''$, say $1\frac{7}{8}''$. Ans

Also, $l = 2d = 2 \times 1\frac{7}{8} = 3\frac{3}{4}''$. Ans.

(1011) Circumference of wheel $= 2.75\,\pi$.

$$\text{R. P. M.} = N = \frac{5{,}280 \times 40}{2.75\,\pi \times 60} = 407.$$

Then, $p = \frac{220{,}000}{407} = 540$ lb. per sq. in.

Applying formula **241**, and getting S_f from Table 46,

$$d = 1.5\sqrt{\frac{10{,}000}{\sqrt{12{,}000 \times 540}}} = 2.97'', \text{ say } 3''. \quad \text{Ans.}$$

$$\text{Hence,} \quad l = \frac{10{,}000}{3 \times 540} = 6.17'', \text{ say } 6\tfrac{1}{4}''. \quad \text{Ans.}$$

The other dimensions may be obtained from Fig. 665 and formula **247.**

(1012) (*a*) Using formula **243** and Table 46,

$$d = 1.13\sqrt{\frac{9{,}600}{7{,}000} \times 2.5} = 2.09'', \text{ say } 2\tfrac{1}{8}''. \quad \text{Ans.}$$

$$l = 2.5\,d = 2.5 \times 2\tfrac{1}{8} = 5\tfrac{5}{16}'', \text{ say } 5\tfrac{1}{4}''. \quad \text{Ans.}$$

(*b*) From formula **242,**

$$p = \frac{P}{l\,d} = \frac{9{,}600}{2\frac{1}{8} \times 5\frac{1}{4}} = 860 \text{ lb. per sq. in.} \quad \text{Ans.}$$

(1013) Using formula **250,**

$$d = .004\sqrt{PN} = .004\sqrt{25 \times 3{,}000} = 1.1'', \text{ say } 1\tfrac{1}{8}''. \quad \text{Ans.}$$

(1014) Using formula **249,**

$$d = .05\sqrt{P} = .05\sqrt{9{,}000} = 4.74'', \text{ say } 4\tfrac{3}{4}''. \quad \text{Ans.}$$

(1015) Applying formula **251,**

$$d_1 = \sqrt{6^2 + \frac{7{,}800}{15\pi \times 4}} = 8.8'', \text{ say } 8\tfrac{3}{4}''. \quad \text{Ans.}$$

$$e = \frac{1}{2}(d_1 - d) = \frac{1}{2}(8\tfrac{3}{4} - 6) = 1\tfrac{3}{8}''. \quad \text{Ans.}$$

$$t = .8\,e = .8 \times 1\tfrac{3}{8}'' = 1.1'', \text{ say } 1\tfrac{1}{8}''. \quad \text{Ans.}$$

Taking s as $2\,t$, $s = 2 \times 1\frac{1}{8}'' = 2\frac{1}{4}''$. Ans.

(See Fig. 668 for manner of representing the journal.)

(1016) This shaft should be calculated with the help of Table 49. To determine Z, we have, from the table of Bending Moments,

$$B = W\frac{l_1 l_2}{l} = 10 \times \frac{3 \times 5}{8} = 18\frac{3}{4} \text{ tons.}$$

The twisting moment $T = PR = 63{,}025 \times \frac{H}{N}$ in.-lb. (see formula **231**) =

$$\frac{63{,}025}{2{,}000 \times 12} \times \frac{H}{N} \text{ ft.-tons} = \frac{63{,}025}{2{,}000 \times 12} \times \frac{300}{60} = 13.13 \text{ ft.-tons.}$$

Then, $$Z = \frac{B}{T} = \frac{18.75}{13.13} = 1.4, \text{ nearly.}$$

From Table 49, $\sqrt[3]{k} = 1.461$ for $Z = 1.4$. Hence (see Table 32, Art. **1416**),

$$d_1 = d\sqrt[3]{k} = 1.461 \times 3.3\sqrt[3]{\frac{H}{N}} = 1.461 \times 3.3\sqrt[3]{\frac{300}{60}} = 8.25''.$$ Ans.

(1017) Applying formula **253**,

$$d = 68.5\sqrt[3]{\frac{90}{110 \times 7{,}000}} = 3.35''.$$

$$Z = \frac{.75\ T}{T} = .75.$$

From Table 49, $\sqrt[3]{k} = 1.209$ for $Z = .6$, and 1.277 for $Z = .8$. Hence, $1.277 - 1.209 : .8 - .6 = x : .75 - .6$; or, $x = .051$.

Therefore, for $Z = .75$, $\sqrt[3]{k} = 1.209 + .051 = 1.26$, and $d_1 = 1.26 \times 3.35 = 4.22''$, say $4\frac{1}{4}''$. Ans.

(1018) Use formula **256.** In this case $m = \frac{6}{13}$.

Hence, $d = d_1\sqrt[3]{1 - m^4} = 13\sqrt[3]{1 - \left(\frac{6}{13}\right)^4} = 12.8''$, say $12\ \frac{13}{16}''$. Ans.

(1019) Use formula **256.** Here $m = \frac{1}{2} = .5$. Hence,

$$d_1 = 16\frac{3}{4}\sqrt[3]{\frac{1}{1 - .5^4}} = 17.11'', \text{ say } 17\frac{1}{8}''. \text{ Ans.}$$

$$d_2 = 17\frac{1}{8} \div 2 = 8\frac{9}{16}''. \text{ Ans.}$$

(1020) The student should be able to draw the joint by referring to Art. **2000** and Fig. 676. The keys may be proportioned by formula **233.** The student should use his own judgment regarding any dimensions not given.

(1021) Fig. 673 and formula **258** are a sufficient guide for the drawing of this coupling.

(1022) (*a*) From formula **260,**

$$n = \frac{1}{3}D + 2 = \frac{1}{3} \times 11 + 2 = 5\frac{2}{3}, \text{ say } 6. \quad \text{Ans.}$$

(*b*) From formula **259** and Table 50,

$$d = k\,D = .239 \times 11 = 2.629'', \text{ say } 2\tfrac{5}{8}''. \quad \text{Ans.}$$

(*c*) From formula **260,**

$$B = D + 2\,d = 11 + 2 \times 2.625 = 16\tfrac{1}{4}''. \quad \text{Ans.}$$

(*d*) $C = D + 4.25\,d = 11 + 4.25 \times 2.625 = 22.16$, say $22\frac{3}{16}''$. Ans.

(*e*) $T = \dfrac{2\,D+1}{7} = \dfrac{2 \times 11 + 1}{7} = 3\frac{2}{7}''$, say $3\frac{1}{4}''$. Ans.

(1023) Using formula **250,**

$$d = .004\sqrt{PN} = .004\sqrt{100 \times 600} = .98'', \text{ say } 1''. \quad \text{Ans.}$$

MACHINE DESIGN.

(QUESTIONS 1024–1063.)

(1024) See Art. **2004.**

(1025) See Art. **2016.**

(1026) Radius of gear $= 15'' = 1\frac{1}{4}$ ft. $= R$. From formula **231,**

$$p = \frac{63{,}025\,H}{n\,R} = \frac{63{,}025 \times 20}{120 \times 15} = 700 \text{ lb., nearly.}$$

From formula **267,**

$$S = \frac{9{,}600{,}000}{v + 2{,}160} = \frac{9{,}600{,}000}{2.5 \times \pi \times 120 + 2{,}160} = 3{,}094 \text{ lb. per sq. in., nearly.}$$

Hence, from formula **266,**

$$b\,C = 16.8\,\frac{p}{S} = \frac{16.8 \times 700}{3{,}094} = 3.8 \text{ sq. in.}$$

Assuming that $b = 2\frac{1}{2}C$, $b\,C = 2.5\,C^2 = 3.8$ sq. in., or $C = \sqrt{\frac{3.8}{2.5}} = 1.2329''$. Hence, number of teeth $=$

$$\frac{\pi \times 30}{1.2329} = 76 +, \text{ say } 76. \quad \text{Ans.}$$

$$\text{Circular pitch} = \frac{\pi \times 30}{76} = 1.2401''. \quad \text{Ans.}$$

(1027) The velocity of a point on the pitch circle is $\pi \times 4\frac{2}{3} \times 60 = 880$ ft. per min., nearly. Hence, from formula **267,**

For notice of copyright, see page immediately following the title page.

$$S = \frac{9{,}600{,}000}{880 + 2{,}160} = 3.158 \text{ lb. per sq. in., nearly.}$$

From formula **231**,

$$p = \frac{63{,}025 \times 300}{60 \times 28} = 11{,}254.5 \text{ lb.}$$

From formula **266**,

$$bC = \frac{16.8 \times 11{,}254.5}{3{,}158} = 59.87 \text{ sq. in.}$$

Taking b equal to $3C$, $3C^2 = 59.87$ sq. in.; whence, $C = 4.4673''$.

$$\text{Number of teeth} = \frac{\pi \times 56}{4.4673} = 39.4, \text{ say } 39 \text{ teeth.}$$

Then, $$C = \frac{3.1416 \times 56}{39} = 4.511''. \quad \text{Ans.}$$

Breadth of face =

$$b = 3C = 3 \times 4.511 = 13.533, \text{ say } 13\tfrac{1}{2}''. \quad \text{Ans.}$$

Thickness of tooth $= .475C = .475 \times 4.511 = 2.143''$. Ans.

Height above pitch line $= .3C = .3 \times 4.511 = 1.353''$. Ans.

Depth below pitch line $= .4C = .4 \times 4.511 = 1.804''$. Ans.

Using formula **123**, Art. **1415**,

$$\text{diameter of shaft} = d = 4.92\sqrt[4]{\frac{300}{60}} = 7.36'', \text{ say } 7\tfrac{3}{8}''. \quad \text{Ans.}$$

The enlargement for the wheel seat will have a diameter of $1.2d = 1.2 \times 7\frac{3}{8} = 8.85''$, say $8\frac{7}{8}''$. Ans.

By formula **273**, thickness of hub =

$$w = \tfrac{1}{3}\sqrt[3]{bCR} = \tfrac{1}{3}\sqrt[3]{13.5 \times 4.511 \times 28} = 3.983'', \text{ say } 4''. \quad \text{Ans.}$$

The length of the hub may be

$$1.4b = 1.4 \times 13\tfrac{1}{2} = 18.9'', \text{ say } 19''. \quad \text{Ans.}$$

Formula **272** gives for the number of arms,

$$z = .55\sqrt[3]{N^2C} = .55\sqrt[3]{39^2 \times 4.511} = 5 \text{ arms.} \quad \text{Ans.}$$

By formula **270,** width of arm at center of wheel =

$$a = \sqrt{\frac{R\,b}{z}} = \sqrt{\frac{28 \times 13\frac{1}{2}}{5}} = 8.6948'', \text{ say } 8\frac{11}{16}''. \quad \text{Ans.}$$

Assuming the taper to be $\frac{1}{48}$ on each side, the width of arm at pitch line is

$$8\frac{11}{16} - (2 \times \frac{1}{48} \times 28) = 7\frac{1}{2}'', \text{ nearly.} \quad \text{Ans.}$$

Thickness of arm $= \frac{1}{2}\,C = \frac{1}{2} \times 4.511 = 2.255'' = 2\frac{1}{4}''$. Ans.

Thickness of stiffening rib $= .4\,C = .4 \times 4.511 = 1.804''$. Ans.

(1028) By formula **275,**

$$P = Qf = 280 \times \frac{1}{3} = \frac{280}{3}.$$

$$\text{Radius of wheel} = R = \frac{6 \times 12}{2} = 36''.$$

Then, by formula **231,**

$$H = \frac{PRN}{63{,}025} = \frac{280 \times 36 \times 110}{3 \times 63{,}025} = 5.864 \text{ H. P.} \quad \text{Ans.}$$

(1029) See Art. **2049.**

(1030) (*a*) By formula **282,**

$$d = \frac{D}{9} = \frac{1}{9}''. \quad \text{Ans.}$$

(*b*) By formula **283,** $w = 1.43\,D^3 = 1.43 \times 1^3 = 1.43$ lb. Ans.

(1031) By formula **291,**

$$P = 6{,}600\,d^2 = 6{,}600 \times 1.25^2 = 10{,}312.5 \text{ lb.} \quad \text{Ans.}$$

(1032) See Art. **2005.**

(1033) The values of the different dimensions, as determined from the table of proportions in Art. **2014,** are as follows:

$d = 14''$.

$a = 14 + 1 = 15''$.
$b = .5 \times 14 + 1 = 8''$.
$c = .66 \times 14 = 9.24''$, say $9\frac{1}{4}''$.
$e = .825 \times 14 - .25 = 11.3''$, say $11\frac{5}{16}''$.
$f = .6 \times 14 = 8.4''$, say $8\frac{13}{32}''$.
$g = .1 \times 14 + .5625 = 1.9625''$ say $1\frac{31}{32}''$.
$h = .1 \times 14 + .25 = 1.65''$, say $1\frac{21}{32}''$.
$h' = .08 \times 14 = 1.12''$, say $1\frac{1}{8}''$.
$i = .11 \times 14 = 1.54''$, say $1\frac{17}{32}''$.
$j = \frac{5}{8}''$.
$k = .5 \times 14 + 1.25 = 8\frac{1}{4}''$.
$l = \frac{3}{8}''$.
$m = .175 \times 14 + .3125 = 2.7625''$, say $2\frac{3}{4}''$.
$n = .25 \times 14 + .25 = 3\frac{3}{4}''$.
$n' = .1 \times 14 + .375 = 1.775''$, say $1\frac{3}{4}''$.
$o = 1''$.
$p = .25 \times 14 + .625 = 4\frac{1}{8}''$.
$q = 1.75 \times 14 = 24\frac{1}{2}''$.
$q' = 1.5 \times 14 = 21''$.
$r = .15 \times 14 = 2.1''$, say $2\frac{1}{8}''$.
$r' = .1 \times 14 = 1.4''$, say $1\frac{3}{8}''$.
$r_1 = 14''$.
$s = .9 \times 14 = 12.6''$, say $12\frac{5}{8}''$.
$t = .15 \times 14 + .375 = 2.475''$, say $2\frac{1}{2}''$.
$t' = .9 \times 14 = 12.6''$, say $12\frac{5}{8}''$.
$u = 1.5 \times 14 = 21''$.
$v = .25 \times 14 + .375 = 3\frac{7}{8}''$.
$w = 1.45 \times 14 = 20.3''$, say $20\frac{1}{4}''$.
$w' = 1.47 \times 14 = 20.58''$, say $20\frac{5}{8}''$.
$w_1 = 1.75 \times 14 = 24\frac{1}{2}''$.
$x = .1 \times 14 = 1.4''$, say $1\frac{3}{8}''$.
$y = .3 \times 14 + .75 = 4.95''$, say $5''$.
$y' = .2 \times 14 + .5 = 3.3''$, say $3\frac{1}{4}''$.
$z = .09 \times 14 = 1.26''$, say $1\frac{1}{4}''$.
$z' = 2\frac{1}{2}''$.

The student may use his own judgment to supply any dimensions not given.

(1034) See Art. **2023.**

(1035) Number of teeth $= N = 56 \times 1\frac{1}{4} = 70$.

$$\text{Circular pitch} = C = \frac{3.1416}{1\frac{1}{4}} = 2.5133''.$$

Applying formula **272,**

$z = .55\sqrt[4]{N^2 C} = .55\sqrt[4]{70^2 \times 2.5133} = 5.79$, or 6 arms. **Ans.**

(1036) See Art. **2037.**

(1037) See Art. **2057.**

(1038) See Art. **2066.**

(1039) See Art. **2074.**

(1040) See Arts. **2005** and **2006.**

(1041) See Art. **2022.**

(1042) The values of the different dimensions, as determined from the table of proportions in Art. **2011,** are:

$$d = 3\tfrac{1}{2}''.$$

$a = 3.25 \times 3.5 = 11\tfrac{3}{8}''$.
$b = 1.75 \times 3.5 = 6\tfrac{1}{8}''$.
$c = 3\tfrac{1}{2}''$.
$e = .5 \times 3.5 = 1\tfrac{3}{4}''$.
$f = .4375 \times 3.5 = 1.53125''$, say $1\tfrac{1}{32}''$.
$g = .09 \times 3.5 = .315''$, say $\tfrac{5}{16}''$.
$h = .3125 \times 3.5 = 1\tfrac{3}{32}''$.
$i = .25 \times 3.5 = \tfrac{1}{8}''$.
$j = .375 \times 3.5 = 1\tfrac{5}{16}''$.
$k = 1.0625 \times 3.5 = 3.72''$, say $3\tfrac{3}{4}''$.
$l = .875 \times 3.5 = 3\tfrac{1}{16}''$.
$m = 1.75 \times 3.5 = 6\tfrac{1}{8}''$.
$n = 1.25 \times 3.5 = 4\tfrac{3}{8}''$.
$o = \tfrac{1}{8}''$.
$p = \tfrac{1}{8}''$.
$q = .625 \times 3.5 = 2\tfrac{3}{16}''$.
$r = .25 \times 3.5 = \tfrac{7}{8}''$.
$s = .1875 \times 3.5 = \tfrac{21}{32}''$, say $\tfrac{11}{16}''$.
$t = .65 \times 3.5 = 2.275''$, say $2\tfrac{5}{16}''$.
$u = .75 \times 3.5 = 2\tfrac{5}{8}''$.
$v = 1.375 \times 3.5 = 4\tfrac{13}{16}''$, say $4\tfrac{7}{8}''$.
$x = .25 \times 3.5 = \tfrac{7}{8}''$.
$y = .5 \times 3.5 = 1\tfrac{3}{4}''$.
$z = .0625 \times 3.5 = \tfrac{7}{32}''$, say $\tfrac{1}{4}''$.

(1043) See Arts. **2020** and **2018.**

(1044) Applying formula **268,**

$$b = 4\tfrac{1}{2}\frac{H}{D} = \frac{4.5 \times 21}{44} = 2.148'', \text{ say } 2\frac{1}{8}''. \quad \text{Ans.}$$

(1045) Applying formula **274,**

$$e = \frac{Np_1}{Np_1 + K} = \frac{4 \times .5236}{4 \times .5236 + 1\tfrac{1}{4}} = 62.62\%. \quad \text{Ans.}$$

(1046) See Art. **2038.**

(1047) Applying formula **276,**

$$t = \frac{B + D}{200} + \frac{1}{16}'' = \frac{10 + 52}{200} + \frac{1}{16} = .3725'', \text{ say } \frac{3}{8}''. \quad \text{Ans.}$$

(1048) Applying formula **283,**

$$w = 1.43\,D^2 = 1.43 \times \left(\frac{7}{8}\right)^2 = 1.094 \text{ lb.}$$

$$a = 420 \div 2 = 210.$$

Applying formula **285,**

$$h = \frac{T}{2w} - \sqrt{\frac{T^2}{4w^2} - \frac{a^2}{2}} =$$

$$\frac{2{,}023}{2 \times 1.094} - \sqrt{\frac{2{,}023^2}{4 \times 1.094^2} - \frac{210^2}{2}} = 12 \text{ ft.} \quad \text{Ans.}$$

(1049) See Art. **2047.**

(1050) See Art. **2050.**

(1051) Velocity $= \frac{18 \times \pi \times 72}{60} = 67.86$ feet per second.

Using formula **281,**

$$H = \frac{v\,D^2}{825}\left(200 - \frac{v^3}{107.2}\right) = \frac{67.86 \times (1\frac{1}{4})^2}{825}\left(200 - \frac{67.86^3}{107.2}\right) =$$

20.18 H. P. $20.18 \times 24 = 484.32$ H. P. Ans.

(1052) By formula **283,**

$$w = 1.43\,D^2 = 1.43 \times \left(1\frac{1}{4}\right)^2 = 2.23 \text{ lb. per foot.}$$

$$a = 386 \div 2 = 193 \text{ ft.}$$

Applying formula **284,**

$$T = \frac{w\,a^2}{2\,h} + w\,h = \frac{2.23 \times 193^2}{2 \times 9.25} + 2.23 \times 9.25 = 4{,}511 \text{ lb.}$$

Ans.

(1053) See Art. **2070,**

$$n = .13\sqrt[3]{P} = .13\sqrt[3]{5{,}600} = 2.31, \text{ say } 2.$$

$$d = .0115\sqrt{\frac{P}{\sqrt{n}}} = .0115\sqrt{\frac{5{,}600}{\sqrt{2}}} = .7237'', \text{ say } \frac{3}{4}''.$$

$$d' = 1.2\,d = 1.2 \times \frac{3}{4} = .9'', \text{ say } \frac{29}{32}''.$$

Remaining dimensions are the same as those calculated in Art. **2070.**

(1054) The values of the dimensions given in the table of proportions in Art. **2019** are:

$$d = 2\tfrac{1}{2}''.$$

$a = 3 \times 2.5 = 7\tfrac{1}{2}''$. $\quad m = .125 \times 2.5 = \tfrac{5}{16}''$.

$b = 7.5 \times 2.5 = 18\tfrac{3}{4}''$. $\quad n = .25 \times 2.5 = \tfrac{5}{8}''$.

$c = 5.375 \times 2.5 = 13\tfrac{7}{16}''$. $\quad o = .1875 \times 2.5 = \tfrac{15}{32}''$, say $\tfrac{1}{2}''$.

$e = 3 \times 2.5 = 7\tfrac{1}{2}''$. $\quad p = .375 \times 2.5 = \tfrac{15}{16}''$, say $1''$.

$f = 1.75 \times 2.5 = 4\tfrac{3}{8}''$. $\quad q = .625 \times 2.5 = 1\tfrac{9}{16}''$.

$g = 1.5 \times 2.5 = 3\tfrac{3}{4}''$. $\quad r = 1.25 \times 2.5 = 3\tfrac{1}{8}''$.

$h = 2.125 \times 2.5 = 5\tfrac{5}{16}''$. $\quad s = .25 \times 2.5 + .5 = 1\tfrac{1}{8}''$.

$i = .16 \times 2.5 = .4''$, say $\tfrac{7}{16}''$. $\quad v = 1.125 \times 2.5 + .1875 = 3''$.

$j = .25 \times 2.5 = \tfrac{5}{8}''$. $\quad w = 1.5 \times 2.5 = 3\tfrac{3}{4}''$.

$k = 1.875 \times 2.5 = 4\tfrac{11}{16}''$. $\quad y = .0625 \times 2.5 = \tfrac{5}{32}''$.

$l = 1.125 \times 2.5 = 2\tfrac{13}{16}''$. $\quad z = 2.5 - .0625 = 2\tfrac{7}{16}''$.

For the other dimensions necessary to draw the bracket, see Fig. 697.

(1055) Using formula **271**,

$$a = 1.75\sqrt[3]{\frac{6 \times 20}{1\frac{1}{2} \times 6}} = 4.15'', \text{ say } 4\frac{1}{8}''. \quad \text{Ans.}$$

$$\frac{1}{2}a = \frac{1}{2} \times 4\frac{1}{8} = 2\frac{1}{16}''. \quad \text{Ans.}$$

(1056) (*a*) The diameter of the wire composing the rope is, by formula **282**,

$$d = \frac{D}{9} = \frac{\frac{3}{4}}{9} = \frac{1}{12}''.$$

The weight of the rope per foot is, by formula **283**,

$$w = 1.43\ D^2 = 1.43 \times \left(\frac{3}{4}\right)^2 = .8044 \text{ lb.}$$

Stress due to bending is, by formula **287**,

$$S_b = \frac{E_1 d}{2R} = \frac{25{,}000{,}000 \times \frac{1}{12}}{13 \times 12} = 13{,}355 \text{ lb. per sq. in.}$$

Stress due to centrifugal force is, by formula **288**,

$$S_c = \frac{4\,w\,v^2}{\pi\,d^2\,n\,g} = \frac{4 \times .8044 \times \left(\frac{5{,}000}{60}\right)^2}{3.1416 \times (\frac{1}{12})^2 \times 42 \times 32.16} = 758 \text{ lb. per sq. in.}$$

Hence, $S_t = S - (S_b + S_c) = 25{,}000 - (13.355 + 758) =$ 10,887 lb. per sq. in.

T_1 = maximum tension on driving side =

$$\frac{\pi}{4} d^2 n S_t = \frac{\pi}{4} \times \left(\frac{1}{12}\right)^2 \times 42 \times 10{,}887 = 2{,}494 \text{ lb.}$$

$T_2 = \frac{1}{2} T_1 = 2{,}494 \times .5 = 1{,}247$ lb.

P = driving force $= T_1 - T_2 = 2{,}494 - 1{,}247 = 1{,}247$ lb.

$$\text{Horsepower} = H = \frac{PV}{33{,}000} = \frac{1{,}247 \times 5{,}000}{33{,}000} = 189 \text{ H. P.}$$

(*b*) The greatest deflection will, of course, be on the driven, or slack, side. Hence, applying formula **285,**

$$h = \frac{T_2}{2w} - \sqrt{\frac{T_2^2}{4w^2} - \frac{a^2}{2}} = \frac{1{,}247}{2 \times .8044} - \sqrt{\frac{1{,}247^2}{4 \times .8044^2} - \frac{212.5}{2}} =$$

14.7 ft. Ans.

(1057) Circular pitch $= C = \frac{\pi d}{84} = \frac{\pi \times 21}{84} = .7854''$.

Applying formula **272,**

$$z = .55 \sqrt[4]{84^2 \times .7854} = 4.74+, \text{ say } 5 \text{ arms.} \quad \text{Ans.}$$

(1058) Using formula **277,**

$$a = \sqrt[3]{\frac{BR}{n}} = \sqrt[3]{\frac{8 \times 11}{4}} = 2.8'', \text{ say } 2\tfrac{7}{8}''. \quad \text{Ans.}$$

Assuming the taper to be $\frac{1}{48}$ on each side, the taper for both sides will be $\frac{1}{48} \times 2 = \frac{1}{24}$. The width of the arm at rim will be

$$2\tfrac{7}{8} - \left(\frac{1}{24} \times 11\right) = 2.417'', \text{ say } 2\tfrac{3}{8}''. \quad \text{Ans.}$$

Thickness at center $= 2\tfrac{7}{8} \times \frac{1}{2} = 1\tfrac{7}{16}''$. Ans.

Thickness at rim $= 2\tfrac{3}{8} \times \frac{1}{2} = 1\tfrac{3}{16}''$. Ans.

(1059) Using formula **279,**

$$S' = \frac{A'}{4} = \frac{7 \times 1\frac{3}{8}}{4} = 2.406 \text{ sq. in.}$$

Net section of one bolt $= 2.406 \div 6 = .401$ sq. in.

Hence, according to Table 43, $\frac{7}{8}''$ in. bolts will be used. Ans.

(1060) (1) The dimensions as taken from Table 52, are:

$A = \frac{9}{32}''$; $B = \frac{7}{16}''$; $C = 2\frac{3}{4}''$; $D = 1\frac{3}{4}''$; $E = 8\frac{3}{4}''$; $F = 1\frac{1}{4}''$; $G = \frac{7}{8}''$; $H = 1\frac{1}{2}''$, and $I = \frac{3}{8}''$.

(2) From the table of proportions in Art. **2021**,

$d = 3''$.

$a = 2 \times 3 = 6''$.
$b = 1.5 \times 3 = 4\frac{1}{2}''$.
$c = .25 \times 3 + .375 = 1\frac{1}{8}''$.
$e = 1.25 \times 3 = 3\frac{3}{4}''$.
$f = .2 \times 3 + .125 = .725$, say $\frac{3}{4}''$.
$g = 1.75 \times 3 = 5\frac{1}{4}''$.
$h = 1.4 \times 3 = 4.2''$, say $4\frac{1}{4}''$.
$j = .4 \times 3 = 1.2''$, say $1\frac{1}{4}''$.
$k = .3 \times 3 = .9''$, say $\frac{15}{16}''$ or $1''$.
$l = .15 \times 3 = .45''$, say $\frac{15}{32}''$ or $\frac{1}{2}''$.
$m = 1.5 \times 3 = 4\frac{1}{2}''$.
$n = .2 \times 3 + .25 = .85''$, say $\frac{7}{8}''$.
$o = .15 \times 3 = .45''$, say $\frac{1}{2}''$.

(3) The various dimensions are readily obtained from Fig. 735.

(4) The dimensions, as obtained from Table 54, are:

$a = 12''$; $b = .79''$; $c = \frac{7}{8}''$; $d = 3\frac{3}{4}''$; $n = 12''$; $e = 1\frac{1}{4}''$; $f = 16\frac{1}{2}''$, and $g = 19''$.

(1061) Applying formula **280**,

$$w = .3\,D^2 = .3 \times \left(1\frac{3}{4}\right)^2 = .91875 \text{ lb. per ft.}$$

Hence, total weight $= 875 \times .91875 = 803.9$ lb. Ans.

(1062) (*a*) Using formula **281**,

$$H = \frac{v\,D^2}{825}\left(200 - \frac{v^2}{107.2}\right) = \frac{\frac{3{,}800}{60} \times \left(1\frac{3}{4}\right)^2}{825}\left(200 - \frac{3{,}800^2}{60^2 \times 107.2}\right) =$$

38.223 H. P. Ans.

(*b*) Referring to the diagram, Fig. 723, the horsepower appears to be about 38 H. P. Ans.

(1063) Applying the method described in Art. **2063,** and assuming that $\frac{R}{d} = 850$, we proceed as follows:

The driving force $= P = \frac{33{,}000\ H}{v} = \frac{33{,}000 \times 125}{4{,}900} = 842$ lb., nearly.

Then, $T_1 = 842 \times 2 = 1{,}684$ lb.

Stress due to bending is

$$S_b = \frac{E_1\, d}{2\, R} = \frac{25{,}000{,}000}{2 \times 850} = 14{,}706 \text{ lb. per sq. in.}$$

Hence, $S_t = 25{,}000 - 14{,}706 = 10{,}294$.

Cross-section of wires $= \frac{T_1}{S_t} = \frac{1}{4}\pi d^2 n$, or

$$d = \sqrt{\frac{4\, T_1}{\pi\, n\, S_t}} = \sqrt{\frac{4 \times 1{,}684}{\pi \times 42 \times 10{,}294}} = .0704.$$

The diameter of the rope is, by formula **282,**

$$D = 9\, d = 9 \times .0704 = .6336, \text{ say } \tfrac{5}{8}''.$$

A recalculation taking into account the stress due to centrifugal force will not appreciably affect the result; hence, the diameter of the rope is $\frac{5}{8}''$. Ans. (*c*)

(*a*) Diameter of wires is, then,

$$\frac{5}{8} \div 9 = .625 \div 9 = .0694''. \quad \text{Ans.}$$

(*b*) Radius of pulley $= .0694 \times 850 = 58.99''$, say $59''$.

Diameter of pulley $= 59 \times 2 = 118'' = 9$ ft. $10''$, say 10 ft

Ans.

INDEX

A	PAGE
Acceleration	321
Accelerating force	321
Action, Arc of	908
" Angle of	908
Addendum line	902
" circle	902
" of tooth	902
Aeriform bodies	298
American thread	1224
Angle of action	908
" of approach	908
" of obliquity	914
" of recess	908
Annular gears	911
Approach, Arc of	908
" Angle of	908
Approximation, Tredgold's	918
Arc of action	908
" of approach	908
" of recess	908
Arms of pulleys	1334
" of wheels	1319
Atom	297
Axis of beam, Neutral	787

B	PAGE
Back gears	875
" gears, Differential	895
" lash	903
Balancing Pulleys	1342
Ball and socket bearings	1307
Base circles	914
Beams	771, 813
" bending moment	775
" Cantilever	771
" Comparison of strength and stiffness	797
" Conditions of equilibrium	772
" Continuous	771
Beams, Deflection of	794
" Experimental law of	789
" Neutral axis of	787
" Restrained	771
" Simple	771
" Vertical shear in	773
Bearing surface of journals	1263
Bearings	1293
" and slides, Pressure on	1265
" Ball and socket	1307
" Distance between	1275
" Divided	1294
" Footstep or pivot	1313
" Solid journal	1293
Bell crank lever	817
Belt fastenings	865
" Power transmission by	852
" pulleys	1332
" pulleys, Counterbalance for	1342
" pulleys, Examples of	1342
" Quarter turn	867
" shifting mechanism	885
" to connect non-parallel shafts	866
" To determine horsepower of	855
" To determine width of	853
" transmission, Examples of	870
Belting, General rule for	855
" Rope	1343
" Use and care of	863
Belts	1332
" Climbing of	864
" Double	856
" Guiding	864
" Open and crossed	851
Bevel gears	917
" gears, Proportions of	1325
Block, Pulley	341
Blow, Force of a	357
Bodies, Composition of	297

	PAGE
Body, Gaseous	298
" Liquid	298
" Solid	298
Bolt for stone work	1238
" heads	1236
" Patch	1243
" Stud	1242
" Tap	1242
Bolts	1224, 1242
" Foundation	1238
" in shear	1244
" Proportions of	1234
" Strength of	1233
Box coupling	1281
Brackets, Wall	1309
Brake, Prony	1651
Brass	1223
Brittleness	300
Bronze	1222
" Manganese	1223
" Phosphor	1223
Built-up wheels	1323
Button-head screws	1243

C

	PAGE
Cam, Harmonic motion	844
" Plate	839
" Positive	845
Cams	839
Cantilever	771
Castings, Chilled	1222
" Steel	1222
Cast iron	741, 1219
" iron, Malleable	743
" iron, Shrinkage of	1220
Center, Dead	821
" line of motion	813
" of gravity	330
" of moments	329
Centrifugal force	327
Centripetal force	328
Chain drums	1360
Chains	809, 1359
" Flat link	1361
" Strength of	1359
Chilled castings	1222
Clamp coupling	1282
Claw coupling	1288
Clearance, Tooth	903
Click	923
Climbing of belts	864
Clutches, Friction	1289
" Shifting gear for	1290
Clutch gearing	883
Coefficient of elasticity	751
Collar journals	1270
Columns	798
Combination of pulleys	342
Composition of forces	307
" of moments	766
Compound lever	337
Compressibility	300
Compressive strength	753
Concave key	1246
Condenser, Cooling surface required by	734
Conditions of equilibrium	334
Cones for crossed belts	859
" for open belts	861
Connecting rod	813
" rod, Crank and	820
Conservation of energy	357
Contact, Law of tooth	907
" Path of	908
" Point of	908
Continuous beams	771
Copper	1222
Cotters	1253
" Locking arrangements for	1260
" Strength of	1256
" Taper of	1259
Cotton belts	1332
Countersink head bolts	1237
" head screws	1243
Couple	329
Coupling, Box or muff	1281
" Clamp	1282
" Flange	1283
" Flexible	1287
" Friction	1289
" Loose	1287
" Seller's cone	1286
Couplings	1281
Crank	813
" and connecting-rod	820
" and slotted crosshead	822
Crank-shaft pedestals	1301
Crossed belts	851
" belts, Continuous cones for	859
Crucible steel	746
Cycle of motions	812
Cylinders and pipes, Strength of	759

D

	PAGE
Dead centers	821
" points	821
Deflection of beams	794
Density	358
Diagram, Skeleton	827
Differential back gears	895
" bevel train	893
" gearing	887

	PAGE
Differential motion	896
" pulley	343
Direction, Line of	334
" of rotation	851
Divided pitch	1231
Divisibility	299
Double belts	856
Double-threaded screws	1230
Driver and follower	812
Ductility	301
Dynamics	304, 317
" of machinery	811

E

	PAGE
Eccentric rod	813
Effective pull of belt	852
Efficiency	351
Elasticity	300
" Coefficient of	751
Elastic limit	750
Elongation, Ultimate	752
End journals	1262
Energy, Conservation of	357
" Kinetic	354
" Potential	356
Engine, lathe train	875
Epicyclic trains	888
Epicycloidal tooth system	908
Equilibrium	334
" Conditions of	334, 767, 772
" of beams	772
" polygon	763
" Static	329
Expansibility	300
Extension	299

F

	PAGE
Factor of safety	756
Falling bodies	320
" bodies, Formulas for	323
Fastenings, Belt	865
Fillister head screws	1243
Fixed pulley	341
Flanges, Pipe	1365
" pulleys	1334
" coupling	1283
Flanged nut	1239
Flat key	1246
Flexible couplings	1287
Follower, Driver and	812
Foot-pound	352
Foot-pounds, Bending moment expressed in	776
Footstep bearings	1313
Force	303
" Accelerating	303, 321
" Centrifugal	327
Force, closed mechanisms	845
" diagram	763
" of a blow	357
" of gravity	318
" Retarding	303, 321
" Unit of	304
Forces, Components of	316
" Composition of	307
" in link mechanisms	825
" Parallelogram of	309
" Polygon of	312
" Representation of	307
" Resolution of	315
" Resultant of	308
" Triangle of	311
Foundation bolts	1238
Friction clutches or couplings	1289
" Coefficient of	348
" gearing	1330
" Laws of	340
" of journals	1268
" of worm gearing	1327
Fulcrum	335

G

	PAGE
Gaseous body	298
Gaskets	1367
Gas, Permanent	298
Gas-pipe threads	1231
Gear blanks, Sizing	904
" Positive	845
" teeth, Proportions for	903
" teeth, Shrouded	1317
" teeth, Strength of	1315
" teeth, Wear of	1317
" wheels	898
" wheels, Proportions of	1318
" wheels, Hubs and arms of	1319, 1322
Gearing, Belt	1332
" Clutch	883
" Differential	887
" Friction	1330
" Mangle	881
" Materials for	1314
" Tooth	1314
" Wire rope	1350
" Worm	1326
" Worm or screw	920
Gears, Annular or internal	911
" Back	875
" Bevel	917
" Single-curve	914
" Standard	914
General properties of matter	298
Governors, Hartford water wheel	897
Gravitation	317

	PAGE
Gravitation, Law of	318
Gravity, Center of	330
" Force of	318
" problems, Formulas for	319
" Specific	358
Guide pulleys	863, 1349
Guiding belts	864
Gun metal	1222
Gyration, Radius of	790

H

	PAGE
Hangers	1311
" Post	1309
Hardness	300
Harmonic motion	823
" motion, cams	844
Hartford water-wheel governor	897
Heads, Bolt	1236
Hob for worm gearing	921
" (worm gearing)	1327
Hollow shafts	1280
Hook bolt	1237
Hooks	1363
Horsepower	354
" of belts	855
Hubs of gear-wheels	1322
" of pulleys	1336
Hydrokinetics	304
Hydrostatics	304

I

	PAGE
Ideal twisting moment	1278
Idlers	1349
Idle wheels	873
Impenetrability	299
Inclined plane	344
Indestructibility	300
Inertia	299, 305
" Moment of	790
Initial velocity	324
Intercept	768
Interchangeable wheels	909
Interference	915
Internal or annular gears	911, 916
Involute gears	912
" rack	916
Iron, Cast	741, 1219
" Malleable cast	743
" Pig	741
" Wrought	743, 1222

J

	PAGE
Joint, Double universal	836
" Knuckle	1244
" Toggle	824
" Universal	835, 1287
Journal-box	1297
Journal-box for small shafts	1298
Journals	1261
" Bearing surface of	1263
" Collar	1269
" End	1262
" Friction of	1268
" Neck	1266
" Pivot	1269

K

	PAGE
Keys	1245
" Proportions of	1249
Key-way	1246
Kinematics	811
Kinetic energy	354
Kinetics	304
Knee-joint	874
Knuckle joint	1244

L

	PAGE
Lathe train	875
Law of gravitation	318
Laws of friction	349
" of motion, Newton's	304
" of weight	318
Leather belts	1332
Lever	335, 813
Levers	813
" Non-reversing	816
" Reversing	814
" Bent	337
" Compound	337
Line of direction	334
" shafting	1271
Link mechanisms	812
Liquid body	298
Locknuts	1240
Locking arrangements for cotters	1260
Loose couplings	1287
" pulleys	1336

M

	PAGE
Machine	811
" construction, Materials used in	1219
Machinery, Dynamics of	811
Machines, Simple	335
Malleability	300
Malleable cast iron	743
Manganese bronze	1223
Mangle gearing	881
Mass of a body	318
Materials of gearing	1314
" used in machine construction	1219
Matter	297
Mechanics	301
Mechanism	812

	PAGE
Mechanism, Force closed	845
" Positive motion	845
" Reversing	880
" Shifting belt	885
" slow motion	823
Mobility	299
Molecule	297
Moment of inertia	790
" Resisting	790
" Twisting	826
Moments, Bending	775
" bending, Diagram of	777
" Center of	329
" Composition of	766
" Graphical expressions for	767
" of forces	825
" of inertia, Polar	1273
" of inertia, Rectangular	1273
" Principle of	826
Motion	301
" Center line of	813
" Harmonic	823
" Newton's laws of	304
" Parallel	837
" Straight line	837
" Vibrating link	829
" Whitworth quick-return	833
Motions, Cycle of	812
" Quick-return	829
Movable pulley	341
Muff coupling	1281
Mule pulleys	870
Multiple-threaded screws	1230

N

	PAGE
Naves of gear-wheels	1322
Neck journals	1266
Neutral axis of a beam	787
" equilibrium	334
Newton's laws of motion	304
Nicholson's hydrometer	380
Non-reversing levers	816
Normal pitch	915
Nuts	1224
" Forms of	1239
" Locking	1239
" Proportions of	1234

O

	PAGE
Obliquity, Angle of	914
Open and crossed belts	851
" hearth steel	746
Outline, Tooth	908

P

	PAGE
Parallel motion	837
" rod	813
Patch bolt	1243
Path of a body	301
" of contact	908
Pawl	923
Pedestals	1297
" Crank-shaft	1301
Phosphor-bronze	1223
Pillar	798
Pillow-block	1297
Pin keys	1248
" Split	1260
Pipe flanges	1365
" threads	1231
Pipes and cylinders, Strength of	759
Pitch circle	900
" Circular	901
" cylinder	900
" diameter	900
" Diametral	901
" line	900
" Normal	915
" of a screw	347
" of screw	1224
" point	907
Pitman	813
Pivot bearings	1313
" journals	1269
Pivots with loose disks	1314
Plane, Inclined	344
Plate cam	839
Point of contact	908
" Pitch	907
Polar moment of inertia	1273
Pole distance	768
" of a force polygon	764
Polygon of forces	312
Porosity	299
Positive motion	845
" motion cams	845
Post hangers	1309
Potential energy	356
Power	353
" arm of lever	336
" transmission by belt	852
" Unit of	353
Pressure on bearings and slides	1265
Principle of moments	329
Projectiles	325
Properties of matter	298
Proportions for gear-teeth	903
Pull of a belt, Effective	852
Pulley	341
" Differential	343
" Hub of	1336
Pulley, Loose	1336
" Rim of	1333
" Split cast-iron	1332

	PAGE
Pulleys, Arms of	1334
" Belt	1332
" Belt, Examples of	1342
" Balancing	1342
" Combination of	342
" Flange	1334
" for rope gearing	1347
" Guide	1349
" Maximum speed of	1338
" Mule	870
" Stepped	862
" Tension	1349
" Tightening or guide	863
" Wire rope	1357
" Wrought-iron	1337

Q

	PAGE
Quarter-turn belts	867
Quick-return motion, Whitworth	833
" return motions	829

R

	PAGE
Rack and wheel	910
Radius of gyration	790
Range of a projectile	325
Ratchet and screw	926
" wheels	923
Ratio, Velocity	348, 812, 849
Rays of a force polygon	764
Reactions of supports	771
Recess, Angle of	908
" Arc of	908
Resisting moment	790
Restrained beam	771
Resultant force	308
Retarding force	303, 321
Reversible clicks	924
Reversing levers	814
" mechanisms	880
Right-handed rotation	812
Rims of pulleys	1333
" of gear-wheels	1318
Rocker	813
Root circle	902
" line	902
" of a tooth	902
Rope belting	1343
" gearing, Pulleys for	1347
" gearing, Wire	1350
" Stresses in wire	1352
Ropes	807, 1345
" Power transmitted by	1345
" Strength of	807
Rotating pieces	1261
Rotation, Direction of	851, 872
" Right-handed	812
" Left-handed	812
Round keys	1248
Rubber belts	1332

S

	PAGE
Safety, Factor of	756
Screw	347
" cutting	877
" gearing	920
" Pitch of	347
" Ratchet and	926
" thread	347
" threads	1224
Screws	1224
" Multiple-threaded	1230
Seats for bearings	1295
" for bearings, Lining for	1297
Seller's cone coupling	1280
" triangular screw thread	1224
Set screws	1244
Shaft couplings	1281
Shafting, Line	1271
" Line, Speed of	1274
Shafts	1271
" at right angles	867
" Hollow	1280
" subjected to bending	1275
" subjected to twisting and bending	1278
Shear	755
" axis	775
" diagram	775
" line	775
" Vertical	773
Shifting-belt mechanism	885
" gear for clutches	1290
" gear for couplings	1290
Shrink rule	1220
Shrinkage of cast iron	1220
Shrouded gears	1317
Simple beam	771
Single belts	1332
" -curve gears	914
Skeleton diagram	827
Slides, Pressure on	1265
Sliding keys	1248
Slotted crosshead, Crank and	822
Slow-motion mechanism	823
Solid body	298
Special properties of matter	299
Specific gravity	358
Speed cones	858
" of line shafting	1274
Split cast-iron pulley	1332
" pins	1260
Sprocket wheel	1362
Spur gears, Proportions of	1318

PAGE

Square threads 1227
Stable equilibrium 334
Static equilibrium 329
Statics 304, 329
Steel 744, 1222
" Bessemer 746
" castings 1222
" Crucible 746
" Open-hearth 746
" Tempering and hardening . 745
Stepped pulleys. 862
Steps for bearings 1295
Stop plate for locking nuts . . 1241
Straight-line motion 837
Strain 748
Strength and stiffness of beam . 797
" of chains . . . 809, 1359
" of cotters 1256
" of gear-teeth . . . 1315
" of keys 1249
" of screw bolts . . . 1233
" Ultimate 752
Stress 748
" and strain, Experimental laws of 750
Stud bolt 1242
Sun and planet motion . . . 891
Sun key 1246
Supports, Reactions of . . . 771
Surface of a beam, Neutral . . 789

T

PAGE

Tap bolt 1242
Taper of cotters 1259
Tenacity 300
Telodynamic transmission . . 1350
Tension 749
" pulleys 1349
Tensions in rope, Ratio of . . 1350
" in suspended rope . . 1351
Thermodynamics 304
Thread of a screw 347
Threads, Forms of 1224
" Gas pipe 1231
Tightening pulleys 863
Toggle joint 824
Tooth contact, Law of . . . 907
" outline, Epicycloidal . . 908
Torsion and shafts 804
Train, Back gear 875
" Engine lathe 875
Trains, Differential bevel . . 893
" Epicyclic 888
" Four-wheel 893
" Higher-wheel . . . 891
" Two-wheel 888

PAGE

Trains, Wheels in 872
Transmission of power by belts . 852
Trapezoidal screw threads . . 1228
Tredgold's approximation . . 918
Triangle of forces 311
Twisting moment 826

U

PAGE

Ultimate elongation 752
" strength 752
Uniform velocity 301
United States standard screw thread 1224
Unit of power 353
" of work 352
" strain 749
" stress 748
Universal joint 835, 1287
" joint, Double . . . 836
Unstable equilibrium . . . 334

V

PAGE

Vapor 298
Variable velocity 301
Vein, Contracted 388
Velocity 301
" Formulas for . . . 302
" of efflux 384
" of flow, Mean . . . 383
" ratio . . . 348, 812, 849
" Uniform 301
" Unit of 302
" Variable 301
Vertical shear 773
Vibrating link motion . . . 829

W

PAGE

Wall brackets 1309
Watt's parallel motion . . . 897
Wedge 347
Weight 299
" arm of a lever . . . 336
" Laws of 318
Wheel and axle 339
" work 340
Wheels in trains 872
Whitworth quick-return motion . 833
" screw thread . . . 1230
Width of belt 853
Wood in machine construction . 1223
Work 352
" Unit of 352
Worm gearing 920
" gearing, Construction of . 1326
" gearing, Friction of . . 1327
Wrenches 1235
Wrought iron 743

NOV -1 1944

LIBRARY OF CONGRESS
0 021 225 268 2